SONY

DIGITAL AUDIO MIXER

DMX-B4008
DMX-B4016

MACHINE CONTROLLER
DMBK-4001

MIXER STAND
DMBK-4002

VU METER PANEL
DMBK-4003

BLANK FRAME
DMBK-4004

TABLE KIT
DMBK-4005

TABLE KIT
DMBK-4006

BACK-UP POWER SUPPLY UNIT
DMBK-4007

BACK-UP POWER SUPPLY UNIT
DMBK-4008

BACK-UP POWER SUPPLY UNIT
DMBK-4009

INPUT EXTENSION KIT
DMBK-4010

OUTPUT EXTENSION KIT
DMBK-4011

20-BIT MIC/LINE INPUT MODULE
DMBK-4012

MAINTENANCE MANUAL Part 2
1st Edition

DMX-B4008	Serial No. 10001 and Higher	(UC)
	Serial No. 20001 and Higher	(J)
	Serial No. 30001 and Higher	(EK)
DMX-B4016	Serial No. 10001 and Higher	(UC)
	Serial No. 20001 and Higher	(J)
	Serial No. 30001 and Higher	(EK)

DMBK-4001	Serial No. 10001 and Higher	
DMBK-4002	Serial No. 10001 and Higher	
DMBK-4003	Serial No. 10001 and Higher	
DMBK-4004	Serial No. 10001 and Higher	
DMBK-4005	Serial No. 10001 and Higher	
DMBK-4006	Serial No. 10001 and Higher	
DMBK-4007	Serial No. 10001 and Higher	(UC)
	Serial No. 20001 and Higher	(J)
	Serial No. 30001 and Higher	(EK)
DMBK-4008	Serial No. 10001 and Higher	(UC)
	Serial No. 20001 and Higher	(J)
	Serial No. 30001 and Higher	(EK)
DMBK-4009	Serial No. 10001 and Higher	(UC)
	Serial No. 20001 and Higher	(J)
	Serial No. 30001 and Higher	(EK)
DMBK-4010	Serial No. 10001 and Higher	
DMBK-4011	Serial No. 10001 and Higher	
DMBK-4012	Serial No. 10001 and Higher	

このマニュアルについて

本書の目的

本書は、下記対象機種およびその別売アクセサリーのメンテナンスマニュアル パート2です。

対象機種：　DMX-B4008/B4016

別売アクセサリー：DMBK-4001/4002/4003/4004/4005/4006/4007/4008/4009/4010/4011/4012

本書は、システム/サービスエンジニアの方々にご使用いただくことを想定し、これらの機種の部品レベルまでのサービスを前提とした情報 (調整要項、回路図、マウント図、詳細パーツリスト等) を記載しています。

構成

本書の構成を把握していただくために、全章の概略を以下に説明します。

第1章 サービスインフォメーション

電源の交換 (ヒューズの交換)、補修用部品注意事項、およびエラーコードについて説明しています。

第2章 電気調整

保守、修理の際に必要な電気調整について説明しています。

SECTION 3. BOARD LAYOUTS

マウント図を掲載しています。

SECTION 4. SCHEMATIC DIAGRAMS

回路図を掲載しています。

SECTION 5. SEMICONDUCTOR PIN ASSIGNMENTS

使用半導体の外形図を掲載しています。

SECTION 6. SPARE PARTS

補修用部品について分解図、メカ部品リスト、電気部品リスト、付属品リストを記載しています。

SECTION 7. CHANGED PARTS

MANUAL STRUCTURE

Purpose of This Manual

This manual is Maintenance Manual Part 2 for the following units and optional accessories.

Models:　DMX-B4008/B4016

Optional Accessories:

DMBK-4001/4002/4003/4004/4005/4006/4007/4008/4009/4010/4011/4012

This manual describes the maintenance information on primary services such as the adjustment and replacement of serviceable parts (adjustment items, board layouts, schematic diagrams, comprehensive parts lists) are contained in this manual to support system and serviced engineers.

Contents

The following is a summary of all the sections for understanding the contents of this manual.

SECTION 1. SERVICE OVERVIEW

Describes the power supply replacement (fuse replacement), notes on repairing parts and errorcode.

SECTION 2. ELECTRICAL ADJUSTMENTS

Describes the electrical adjustments necessary when conducting repairs and maintenance.

SECTION 3. BOARD LAYOUTS

Contains the mount diagrams.

SECTION 4. SCHEMATIC DIAGRAMS

Contains the schematic diagrams.

SECTION 5. SEMICONDUCTOR PIN ASSIGNMENTS

Contains the pin assignment diagrams of the semiconductors used.

SECTION 6. SPARE PARTS

Contains the exploded view, mechanical parts list, electrical parts list and accessory list of the spare parts.

SECTION 7. CHANGED PARTS

メンテナンスマニュアル パート1

第1章 設置

本機を使用するにあたっての使用環境・設置スペースなどをはじめ、機器との接続に必要なコネクタの情報などについて説明しています。

第2章 別売アクセサリーの取り付け

ここでは、別売アクセサリー (DMBK-4001～4012) の取り付け方法および使用方法について記載しています。

第3章 サービスインフォメーション

主要部品配置図、 外装の開閉/取り外し、主要部品の交換、プラグイン基板の取り付け/取り外し、延長基板の使用方法等について説明します。

SECTION 4. BLOCK DIAGRAMS AND DESCRIPTIONS

メイン基板のブロック図およびフレーム図を記載しています。

SECTION 5. SPARE PARTS

補修用部品について分解図、メカ部品リスト、付属品リストを記載しています。

Maintenance Manual Part 1

SECTION 1. INSTALLATION

Describes the operating environment, installation space and information about the connectors required to connect with the other units.

SECTION 2. INSTALLATION OF OPTIONAL ACCESSORIES

Describes the installation procedures and usage of the optional accessories (DMBK-4001 to 4012).

SECTION 3. SERVICE OVERVIEW

Describes the main parts layout diagram, removing/attaching the cabinet, replacing the main parts, attaching/removing the plug-in board, usage of the extension board, etc.

SECTION 4. BLOCK DIAGRAMS AND DESCRIPTIONS

Contains the block diagrams of main board and the frame wirings.

SECTION 5. SPARE PARTS

Contains the exploded view, mechanical parts list and accessory list of the spare parts.

目　次
TABLE OF CONTENTS

このマニュアルについて …… 1

第1章　サービスインフォメーション

1-1.　スイッチングレギュレーターの交換 …… 1-1 (J)
　1-1-1.　DMX-B4008/B4016コンソール …… 1-1 (J)
　1-1-2.　DMX-B4008プロセッサー …… 1-3 (J)
　1-1-3.　BACK UP POWER SUPPLY DMBK-4007 (OPTION) …… 1-5 (J)
　1-1-4.　DMX-B4016プロセッサー (RACK POWER ASSY) または BACK UP POWER SUPPLY DMBK-4008 (OPTION) …… 1-5 (J)
　1-1-5.　電源ヒューズの交換について …… 1-6 (J)
1-2.　補修用部品注意事項 …… 1-7 (J)
　1-2-1.　補修用部品注意事項 …… 1-7 (J)
　1-2-2.　チップ部品の交換方法 …… 1-7 (J)
　1-2-3.　PLCC ICの取り外し方法 …… 1-8 (J)
　1-2-4.　TIME KEEPER RAMの交換方法 …… 1-9 (J)

第2章　電気調整
(追加版にて近日発行)

MANUAL STRUCTURE …… 1

SECTION 1 SERVICE OVERVIEW

1-1.　Switching Regulator Replacement …… 1-1 (E)
　1-1-1.　DMX-B4008/B4016 Console …… 1-1 (E)
　1-1-2.　DMX-B4008 Processor …… 1-3 (E)
　1-1-3.　Back Up Power Supply DMBK-4007 (Option) …… 1-5 (E)
　1-1-4.　DMX-B4016 Processor (Rack Power Assembly) or Back Up Power Supply DMBK-4008 (Option) …… 1-5 (E)
　1-1-5.　Replacing Power Supply Fuse …… 1-6 (E)
1-2.　Notes on Repairing Parts …… 1-7 (E)
　1-2-1.　Notes on Repairing Parts …… 1-7 (E)
　1-2-2.　Replacing Chip Parts …… 1-7 (E)
　1-2-3.　Removing of PLCC IC …… 1-8 (E)
　1-2-4.　Replacing TIME KEEPER RAM …… 1-9 (E)

SECTION 2 ELECTRICAL ADJUSTMENTS
(This section will be available as a supplement.)

SECTION 3 BOARD LAYOUTS

3-1. DMX-B4008/DMX-B4016 METER UNIT/CONSOLE

IF-414 3-2
IF-414A 3-2
CPU-145 3-4
CPU-145A 3-4
IF-413 3-6
MOA-7A 3-8
MOA-7B 3-8
KY-225 3-10
IF-421 3-12
MT-88 3-14
PS-312 3-16
SW-604 3-18
SW-605 3-19
CN-838 3-20
CN-839 3-20
CN-840A 3-21
CN-840B 3-21
SW-606 3-22
VR-165 3-22
MIC 3-22
LED-156 3-23
CN-841 3-23

3-2. DMX-B4008 PROCESSOR

CPU-164 3-24
DIO-26 3-26
MIX-15 3-28
MB-481 3-30
CN-833 3-32
CN-834 3-33
CN-835 3-34
CN-836 3-35
CN-837 3-36
PS-313 3-37
DP-131 3-38

3-3. DMX-B4016 PROCESSOR

DP-131 3-38
CPU-144 3-40
IPM-48 3-42
MIX-16 3-44
MB-480 3-46
CN-827 3-48
CN-828A 3-49
CN-828B 3-49
CN-830 3-50
CN-831 3-51
CN-832A 3-52
CN-832B 3-52
PS-314 3-53

3-4. OPTIONAL ACCESSORIES

KY-225 3-10
SW-604 3-18
SW-605 3-19
LED-156 3-23
DP-131 3-38
IPM-48 3-42
MIX-16 3-44
CN-842 3-55
CPU-146 3-56
KY-302 3-58
MT-94 3-61
SW-602 3-62
VR-163 3-63
AD-100 3-64

SECTION 4 SCHEMATIC DIAGRAMS

4-1. DMX-B4008/DMX-B4016 METER UNIT/CONSOLE

IF-414 4-2
IF-414A 4-2
CPU-145 4-8
CPU-145A 4-8
IF-413 4-15
MOA-7A 4-19
MOA-7B 4-19
KY-225 4-24
LED-156 4-27
SW-604 4-29
SW-605 4-30
IF-421 4-31
MT-88 4-33
CONSOLE/METER UNIT Frame Wiring 4-34
CN-838 4-35
CN-839 4-36
CN-840A 4-37
CN-840B 4-37
CN-841 4-37
SW-606 4-37
VR-165 4-37

4-2. DMX-B4008 PROCESSOR

CPU-164 4-39
DIO-26 4-45

MIX-15 4-53
MB-481 4-60
CN-833 4-63
CN-834 4-64
CN-835 4-65
CN-836 4-66
CN-837 4-67
DP-131 4-69
PS-313 4-69
PROCESSOR Frame Wiring 4-69
4-3. DMX-B4016 PROCESSOR
DP-131 4-69
CPU-144 4-71
IPM-48 4-82
MIX-16 4-93
MB-480 4-106
CN-827 4-109
CN-828A 4-110
CN-828B 4-110
CN-830 4-111
CN-831 4-112
CN-832A 4-113
CN-832B 4-113
PS-314 4-115
PROCESSOR Frame Wiring 4-115
4-4. OPTIONAL ACCESSORIES
KY-225 4-24
LED-156 4-27
SW-604 4-29
SW-605 4-30
MT-94 4-36
DP-131 4-69
IPM-48 4-82
MIX-16 4-93
CPU-146 4-119
KY-302 4-126
CN-842 4-128
AD-100 4-129
SW-602 4-133
VR-163 4-133

SECTION 5 SEMICONDUCTOR PIN ASSIGNMENTS

SECTION 6 SPARE PARTS

6-1. Notes on Repair Parts 6-1
6-2. Exploded View 6-2
6-3. Electrical Parts List 6-25
6-4. Supplied Accessories 6-96
6-5. Optional Fixture 6-97

SECTION 7 CHANGED PARTS

このマニュアルに記載されている事柄の著作権は当社にあり，説明内容は機器購入者の使用を目的としています。
従って，当社の許可なしに無断で複写したり，説明内容（操作，保守等）と異なる目的で本マニュアルを使用することを禁止します。

The material contained in this manual consists of information that is the property of Sony Corporation and is intended solely for use by the purchasers of the equipment described in this manual.
Sony Corporation expressly prohibits the duplication of any portion of this manual or the use thereof for any purpose other than the operation or maintenance of the equipment described in this manual without the express written permission of Sony Corporation.

Le matériel contenu dans ce manuel consiste en informations qui sont la propriété de Sony Corporation et sont destinées exclusivement à l'usage des acquéreurs de l'équipement décrit dans ce manuel.
Sony Corporation interdit formellement la copie de quelque partie que ce soit de ce manuel ou son emploi pour tout autre but que des opérations ou entretiens de l'équipement à moins d'une permission écrite de Sony Corporation.

Das in dieser Anleitung enthaltene Material besteht aus Informationen, die Eigentum der Sony Corporation sind, und ausschließlich zum Gebrauch durch den Käufer der in dieser Anleitung beschriebenen Ausrüstung bestimmt sind.
Die Sony Corporation untersagt ausdrücklich die Vervielfältigung jeglicher Teile dieser Anleitung oder den Gebrauch derselben für irgendeinen anderen Zweck als die Bedienung oder Wartung der in dieser Anleitung beschriebenen Ausrüstung ohne ausdrückliche schriftliche Erlaubnis der Sony Corporation.

SECTION 3
BOARD LAYOUTS

3-1. DMX-B4008/DMX-B4016 METER UNIT/CONSOLE

BOARD NAME	FUNCTION	PAGE
CN-838	Connector Board	3-20
CN-839	Connector Board	3-20
CN-840A (for UC/EK)	Connector Board	3-21
CN-840B (for J)		
CN-841	Connector Board	3-23
CPU-145 (for DMX-B4008)	Control Panel Host CPU Board	3-4
CPU-145A (for DMX-B4016)		
IF-413	GPI Interface Board	3-6
IF-414 (for DMX-B4008)	Channel CPU Board	3-2
IF-414A (for DMX-B4016)		
IF-421 *	Meter Driver Board	3-12
KY-225	Channel Switch Board	3-10
LED-156	Channel Status LED Board	3-23
MIC	Mic	3-22
MOA-7A (for UC/EK)	Analog Monitor Communication Board	3-8
MOA-7B (for J)		
MT-88 *	Meter LED Board	3-14
PS-312	Control Panel Power Mix Board	3-16
SW-604	PFL Switch Board	3-18
SW-605	Start/Stop Switch Board	3-19
SW-606	Monitor Control Switch Board	3-22
VR-165	Monitor Volume Board	3-22

* : METER UNIT

3-2. DMX-B4008 PROCESSOR

BOARD NAME	FUNCTION	PAGE
CN-833	Connector Board	3-32
CN-834	Connector Board	3-33
CN-835	Connector Board	3-34
CN-836	Connector Board	3-35
CN-837	Connector Board	3-36
CPU-164	Processor Rack CPU Board	3-24
DIO-26	Digital Input/Output Board	3-26
DP-131	Processor Rack Power LED	3-38
MB-481	Processor Rack Mother Board	3-30
MIX-15	Mixing Board	3-28
PS-313	Processor Rack Power Mix Board	3-37

3-3. DMX-B4016 PROCESSOR

BOARD NAME	FUNCTION	PAGE
CN-827	Connector Board	3-48
CN-828A	Connector Board	3-49
CN-828B		
CN-830	Connector Board	3-50
CN-831	Connector Board	3-51
CN-832A (for UC/EK)	Connector Board	3-52
CN-832B (for J)		
CPU-144	Processor Rack CPU Board	3-40
IPM-48	Digital Input Board	3-42
DP-131	Processor Rack Power LED	3-38
MB-480	Processor Rack Mother Board	3-46
MIX-16	Mixing Board	3-44
PS-314	Processor Rack Power Mix Board	3-53

3-4. OPTIONAL ACCESSORIES

MODEL NAME	BOARD NAME	FUNCTION	PAGE
DMBK-4001	CN-842	Connector Board	3-55
	CPU-146	CPU Board	3-56
	KY-302	Switch Board	3-58
DMBK-4003	MT-94	Connector Board	3-61
DMBK-4007	DP-131	Processor Rack Power LED	3-38
DMBK-4010	IPM-48	Digital Input Board	3-42
	KY-225	Channel Switch Board	3-10
	LED-156	Channel Status LED Board	3-23
	MIX-16	Mixing Board	3-44
	SW-604	PFL Switch Board	3-18
	SW-605	Start/Stop Switch Board	3-19
DMBK-4011	MIX-16	Mixing Board	3-44
DMBK-4012	AD-100	Mic/Line Amp AD Converter	3-64
	SW-602	Switch Board	3-62
	VR-163	Volume Board	3-63

IF-414/414A
DMX-B4008/B4016 CONSOLE

3-1. DMX-B4008/B4016 METER UNIT/CONSOLE

IF-414/414A

A (Component) Side

IF-414 /414A BOARD
1-649-749-11

CN311	U-6	IC501	M-6
CN312	U-3	IC502	N-7
CN331	A-7	IC503	P-7
CN332	A-6	IC504	P-9
CN333	A-6	IC505	K-9
CN341	A-14	IC506	J-9
CN342	T-14	IC507	L-8
CN351	E-14	IC508	H-8
CN352	N-14	IC509	L-9
CN353	R-9	IC510	K-10
CN361	B-14	IC511	K-9
CN362	B-14	IC512	P-11
CN371	T-14	IC513	S-11
		IC514	J-11
D100	N-1	IC515	H-11
D101	L-1	IC516	H-11
D102	A-2	IC517	R-12
D103	A-2	IC518	S-12
D104	A-2	IC519	K-11
D105	B-2	IC520	L-11
D106	B-2	IC521	M-11
D107	B-2	IC523	N-11
D108	B-2	IC524	L-12
D109	B-1	IC525	D-9
D201	U-14	IC601	B-7
D401	C-2	IC602	F-7
D402	E-2	IC603	F-6
D403	G-2	IC604	C-10
D404	J-2	IC607	D-10
D405	L-3	IC608	C-9
D406	M-2	IC609	H-10
D407	N-2	IC610	G-10
D408	S-2	IC612	D-11
D409	D-2	IC613	C-11
D410	D-2	IC614	F-11
D411	F-2	IC615	F-11
D412	G-2	IC616	E-11
D413	J-2	IC617	E-12
D414	L-3	IC618	F-12
D415	M-2	IC619	D-12
D416	N-2	IC620	J-10
D417	B-13	IC621	L-7
D418	B-13	IC622	K-7
D419	C-13	IC623	H-9
D420	C-13	IC624	J-4
D421	B-13	IC625	H-7
D422	C-13	IC626	K-10
D423	C-13	IC627	J-9
D424	D-13	IC628	E-12
D425	B-10	IC629	G-11
D501	L-7	IC630	E-14
D502	L-11	IC631	G-13
D503	M-11	IC632	F-13
D504	M-11	IC633	D-13
D505	M-11	SP501	G-14
D506	M-10		
D507	M-10	S101	K-1
D601	H-10	S102	H-1
D602	J-10	S103	L-6
D603	K-10	S401	*C-1
D604	K-10	S402	*D-1
		S403	*F-1
E101	P-3	S404	*G-1
E201	P-7	S405	*K-1
E301	E-3	S406	*M-1
E401	A-8	S407	*P-1
E501	M-9	S408	*R-1
E601	E-10	S409	*C-12
		S501	M-7
IC101	S-3	S502	H-10
IC102	T-1	S601	F-10
IC103	K-2	S602	G-10
IC104	C-2	S603	K-6
IC105	E-2	S604	L-9
IC106	F-2	S605	H-7
IC107	J-2	S606	J-8
IC108	B-3		
IC109	P-2	TP102	P-3
IC110	H-2	TP103	R-3
IC111	M-2	TP104	S-3
IC112	J-3	TP105	M-3
IC113	F-3	TP106	S-1
IC114	G-2	TP107	S-2
IC115	K-5	TP108	R-3
IC116	K-3	TP109	K-6
IC117	N-4	TP110	L-6
IC118	N-3	TP111	K-3
IC119	H-5	TP112	L-3
IC201	U-8	TP113	S-4
IC202	U-7	TP114	E-10
IC205	T-13	TP115	E-10
IC206	U-13	TP116	E-10
IC207	S-12	TP117	R-4
IC208	U-11	TP118	R-2
IC209	S-11	TP119	R-2
IC210	U-10	TP120	R-1
IC211	S-9	TP121	J-3
IC212	U-9	TP122	J-3
IC213	S-14	TP123	F-6
IC301	B-2	TP124	E-6
IC302	F-3	TP125	R-1
IC303	F-4	TP126	N-1
IC304	D-3	TP127	M-6
IC305	D-4	TP502	P-7
IC306	G-4	TP503	M-6
IC307	C-4	TP504	N-6
IC308	F-3	TP505	P-7
IC309	F-3	TP602	A-14
IC310	G-3	TP603	A-14
IC311	E-6	TP604	C-14
IC312	F-6	TP605	A-14
IC313	F-4	TP606	A-14
IC314	B-6	TP607	F-10
IC315	C-6	TP608	C-8
IC316	B-4	TP609	F-10
IC317	G-6	TP610	G-7
IC318	D-6	TP611	F-7
IC319	H-6	TP612	E-7
IC401	B-9	TP613	E-7
IC402	B-10		
IC403	B-8	X101	D-1
IC404	B-10	X501	P-11
IC405	A-8	X601	G-9
IC406	B-12		
IC407	B-13		
IC408	A-13		
IC409	A-12		
IC410	B-8		

* : B (Soldering) Side mount

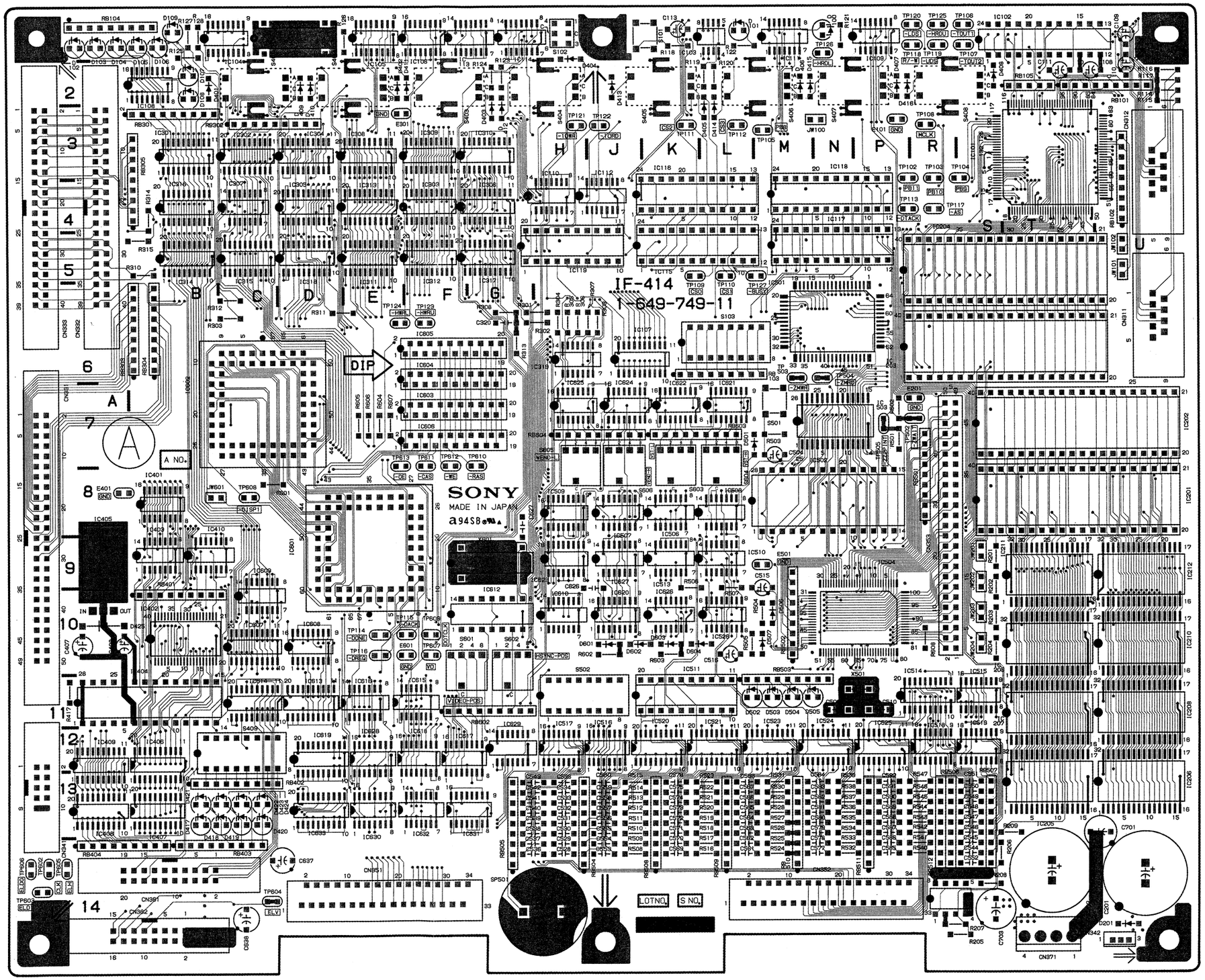

1-649-749-11

IF-414/414A
DMX-B4008/B4016 CONSOLE

IF-414/414A

B (Soldering) Side

IF-414 /414A BOARD
1-649-749-1 1

CN311	U-6	IC501	M-5
CN312	U-3	IC502	N-7
CN331	A-7	IC503	P-7
CN332	A-6	IC504	P-9
CN333	A-6	IC506	K-9
CN341	A-14	IC507	J-9
CN342	T-14	IC508	L-8
CN351	E-14	IC509	H-8
CN352	N-14	IC510	L-9
CN353	R-9	IC511	K-10
CN361	B-14	IC512	K-9
CN362	B-14	IC513	P-11
CN371	T-14	IC514	S-11
		IC515	J-11
D100	N-1	IC516	H-11
D101	L-1	IC517	H-11
D102	A-2	IC518	R-12
D103	A-2	IC519	S-12
D104	A-2	IC520	K-11
D105	B-2	IC521	L-11
D106	B-2	IC523	M-11
D107	B-2	IC524	N-11
D108	B-2	IC525	L-12
D109	B-1	IC601	D-9
D201	U-14	IC602	B-7
D401	C-2	IC603	F-7
D402	E-2	IC604	F-6
D403	G-3	IC607	C-10
D404	J-2	IC608	D-10
D405	L-3	IC609	C-9
D406	M-2	IC610	H-10
D407	P-2	IC612	G-10
D408	S-2	IC613	D-11
D409	D-2	IC614	C-11
D410	F-2	IC615	E-11
D411	F-2	IC616	E-11
D412	G-2	IC617	F-12
D413	J-2	IC618	F-12
D414	L-3	IC619	D-12
D415	M-2	IC620	J-10
D416	P-3	IC621	L-7
D417	B-13	IC622	K-7
D418	B-13	IC623	H-9
D419	C-13	IC624	J-4
D420	C-13	IC625	H-7
D421	B-13	IC626	K-10
D422	C-13	IC627	J-9
D423	C-13	IC628	E-12
D424	D-13	IC629	G-11
D425	B-10	IC630	E-14
D501	L-7	IC631	G-13
D502	L-11	IC632	F-13
D503	M-11	IC633	D-13
D504	M-11		
D505	M-11	SP501	G-14
D506	M-10		
D507	M-10	S101	K-1
D601	H-10	S102	H-1
D602	J-10	S103	L-6
D603	K-10	S401	*C-1
D604	K-10	S402	*D-1
		S403	*F-1
E101	P-3	S404	*G-1
E201	P-7	S405	*K-1
E301	E-3	S406	*M-1
E401	A-8	S407	*P-1
E501	M-9	S408	*R-1
E601	E-10	S409	*C-12
		S501	M-7
IC101	S-3	S502	H-10
IC102	T-1	S601	F-10
IC103	K-1	S602	G-10
IC104	C-2	S603	K-8
IC105	E-2	S604	L-8
IC106	F-2	S605	H-7
IC107	J-6	S606	J-8
IC108	B-3		
IC109	P-2	TP102	P-3
IC110	H-3	TP103	R-3
IC111	M-2	TP104	S-3
IC112	J-3	TP105	M-3
IC113	F-2	TP106	S-1
IC114	G-2	TP107	S-2
IC115	K-5	TP108	R-3
IC116	K-3	TP109	K-6
IC117	N-4	TP110	L-6
IC118	N-3	TP111	K-3
IC119	H-5	TP112	J-3
IC201	U-8	TP113	P-4
IC202	U-7	TP114	E-10
IC205	T-13	TP115	F-10
IC206	U-13	TP116	E-10
IC207	S-12	TP117	R-4
IC208	U-11	TP118	R-2
IC209	S-11	TP119	R-2
IC210	U-10	TP120	R-1
IC211	S-9	TP121	H-3
IC212	U-9	TP122	L-3
IC213	S-14	TP123	F-6
IC301	B-3	TP124	E-6
IC302	C-3	TP125	R-1
IC303	F-4	TP126	N-1
IC304	D-3	TP127	M-6
IC305	D-4	TP502	P-7
IC306	G-4	TP503	M-6
IC307	C-4	TP504	N-6
IC308	E-3	TP505	P-7
IC309	F-3	TP602	A-14
IC310	G-3	TP603	A-14
IC311	E-6	TP604	C-14
IC312	F-6	TP605	A-14
IC313	E-4	TP606	A-14
IC314	B-6	TP607	F-10
IC315	C-6	TP608	C-8
IC316	B-4	TP609	F-10
IC317	G-6	TP610	G-7
IC318	D-6	TP611	F-7
IC319	H-6	TP612	F-7
IC401	B-8	TP613	E-7
IC402	B-10		
IC403	B-8	X101	D-1
IC404	B-10	X501	P-11
IC405	A-8	X601	G-9
IC406	B-12		
IC407	B-13		
IC408	A-13		
IC409	A-12		
IC410	B-8		

* : B (Soldering) Side mount

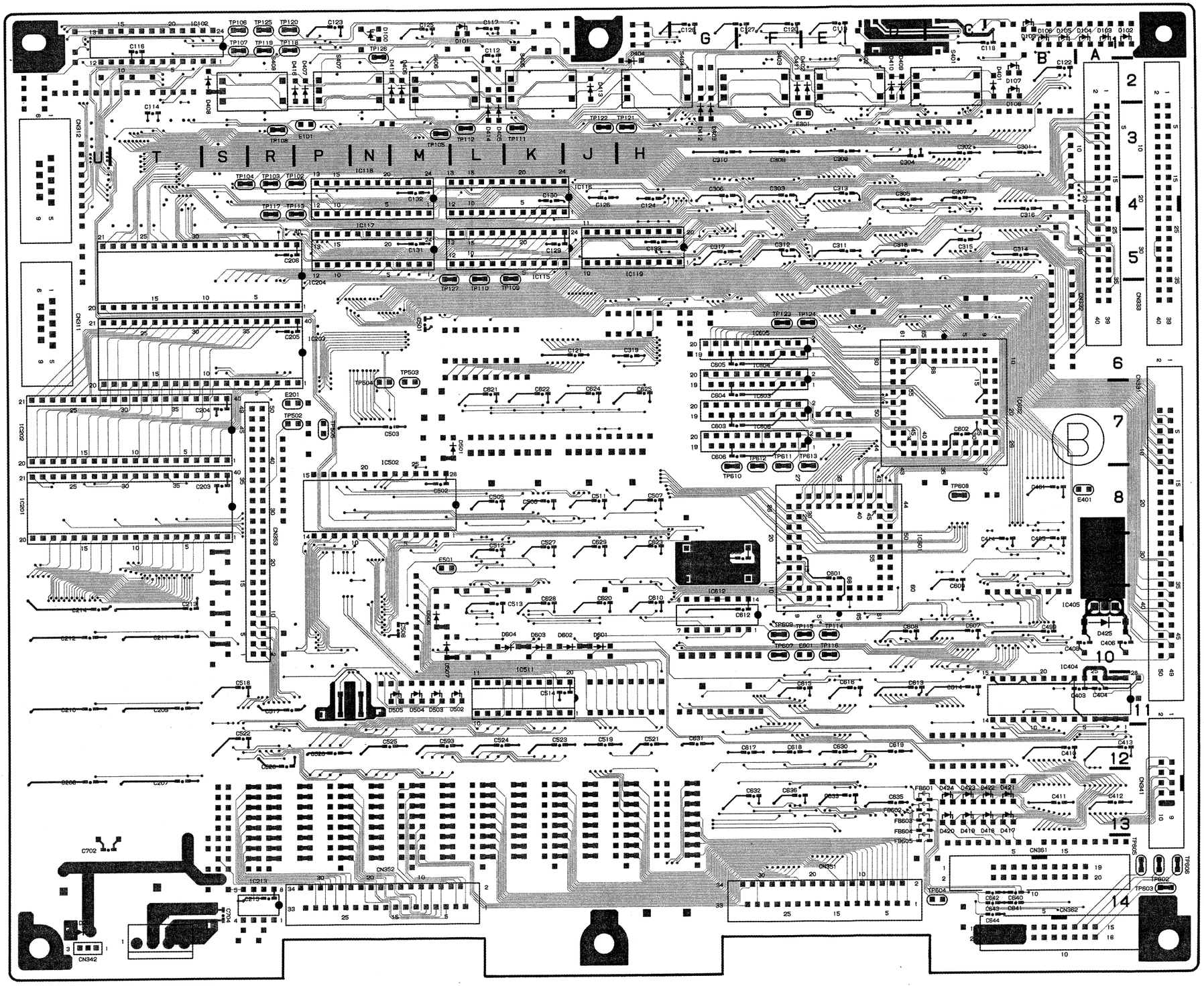

1-649-749-11

3-3

CPU-145/145A
DMX-B4008/B4016 CONSOLE

CPU-145/145A

A (Component) Side

CPU-145/145A BOARD
1-649-763-11

CN1	T-5	IC601	F-7
CN2	T-2	IC602	E-8
CN3	U-8	IC603	B-7
CN200	B-10	IC604	B-8
CN201	D-1	IC605	E-8
CN202	E-10	IC606	B-9
CN203	L-10	IC607	C-7
CN204	J-1	IC608	C-8
CN205	M-1	IC609	C-9
CN206	R-1	IC610	G-7
CN207	R-10	IC611	H-8
CN208	S-10	IC612	D-8
		IC613	D-7
D101	N-1	IC614	M-1
D102	A-1	IC615	F-7
D103	A-1	IC701	N-2
D104	A-2	IC702	*S-2
D105	A-2	IC703	I-3
D106	A-3	IC704	R-1
D107	A-3	IC705	I-1
D108	A-3	IC706	P-2
D109	A-3	IC707	P-1
D110	A-3	IC708	N-1
D111	A-4		
D201	A-4	SW101	L-1
D501	R-6		
D502	J-2	S102	L-1
D503	J-3	S501	P-6
D504	A-5	S502	A-10
D505	A-6	S601	A-7
D506	A-6	S602	A-8
D507	A-6		
D601	A-4	TP101	L-2
D602	A-4	TP102	K-3
D603	A-4	TP103	L-2
D604	A-5	TP104	L-5
D701	A-2	TP105	R-3
D702	A-2	TP106	S-4
D703	A-2	TP107	N-2
D704	A-6	TP108	U-5
D705	A-1	TP109	S-3
		TP110	R-3
E1	C-1	TP111	S-3
E2	D-4	TP112	R-3
E3	D-9	TP113	R-3
E4	J-1	TP114	R-3
E5	H-10	TP115	R-3
E6	P-1	TP116	S-5
E7	P-6	TP117	S-5
E8	S-9	TP118	S-5
		TP119	R-5
IC101	P-3	TP120	R-3
IC102	K-3	TP121	G-4
IC103	R-5	TP122	R-4
IC104	L-3	TP123	R-5
IC105	M-2	TP124	J-10
IC106	M-2	TP125	J-10
IC107	*M-2	TP126	J-8
IC108	*L-2	TP127	H-6
IC109	T-4	TP128	H-6
IC110	S-4	TP129	J-6
IC111	*S-4	TP502	S-7
IC112	H-9	TP601	M-1
IC113	G-9	TP602	M-1
IC114	L-8	TP603	N-1
IC115	L-6		
IC116	M-7	X101	T-4
IC117	M-9	X501	S-8
IC118	M-6		
IC119	*S-2		
IC204	N-7		
IC205	J-3		
IC206	G-3		
IC207	J-5		
IC208	G-5		
IC209	J-6		
IC210	G-6		
IC211	J-7		
IC212	G-7		
IC213	F-5		
IC301	L-9		
IC302	K-9		
IC303	J-9		
IC304	N-9		
IC305	M-9		
IC306	N-5		
IC307	H-10		
IC308	N-10		
IC309	M-10		
IC310	L-10		
IC311	K-10		
IC312	J-10		
IC313	G-9		
IC314	F-9		
IC315	E-9		
IC401	C-6		
IC402	C-4		
IC403	E-5		
IC404	E-4		
IC405	F-7		
IC406	D-2		
IC407	C-2		
IC408	E-2		
IC409	E-2		
IC410	B-2		
IC501	R-8		
IC503	S-9		
IC504	R-7		
IC505	S-6		
IC506	R-7		
IC507	T-8		
IC508	S-6		
IC509	G-1		
IC510	H-1		
IC511	H-2		
IC512	H-2		
IC513	T-8		

* : B (Soldering) Side mount

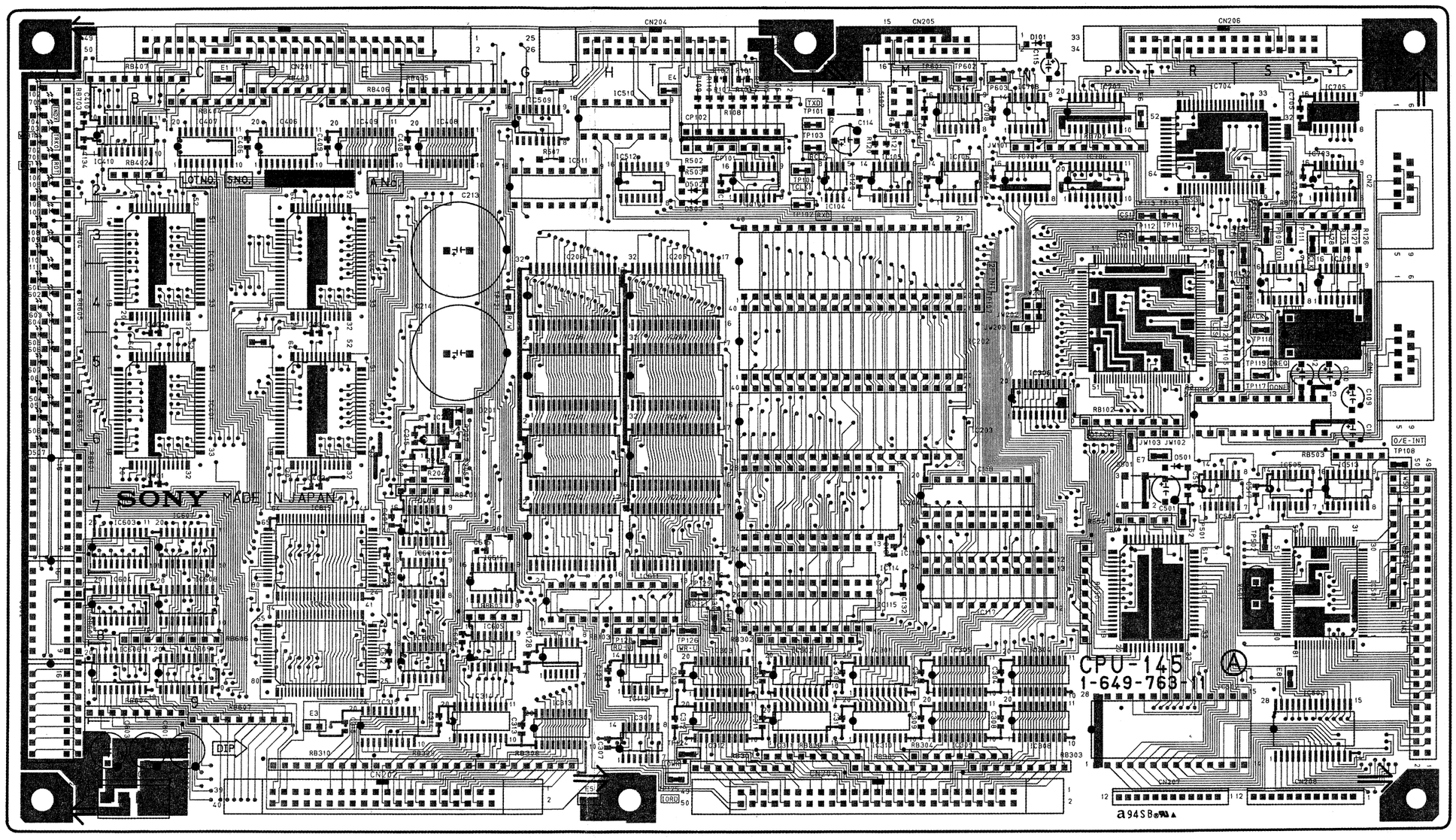

1-649-763-11

3-4

CPU-145/145A
DMX-B4008/B4016 CONSOLE

CPU-145/145A

B (Soldering) Side

CPU-145/145A BOARD
1-649-763-11

CN1	T-5	IC601	F-7
CN2	T-2	IC602	F-8
CN3	U-8	IC603	B-7
CN200	B-10	IC604	B-8
CN201	D-1	IC605	F-8
CN202	E-10	IC606	B-9
CN203	L-10	IC607	C-7
CN204	J-1	IC608	C-8
CN205	M-1	IC609	C-9
CN206	R-1	IC610	G-7
CN207	R-10	IC611	H-8
CN208	S-10	IC612	D-8
		IC613	D-7
D101	N-1	IC614	M-1
D102	A-1	IC615	F-7
D103	A-1	IC701	N-2
D104	A-2	IC702	*S-2
D105	A-2	IC703	T-2
D106	A-3	IC704	R-1
D107	A-3	IC705	T-1
D108	A-3	IC706	P-2
D109	A-3	IC707	P-1
D110	A-3	IC708	N-1
D111	A-4		
D201	A-4	SW101	L-1
D501	R-6		
D502	J-2	S102	L-1
D503	J-3	S501	P-6
D504	A-5	S502	A-10
D505	A-6	S601	A-7
D506	A-6	S602	A-8
D507	A-6		
D601	A-4	TP101	L-2
D602	A-4	TP102	K-3
D603	A-4	TP103	L-2
D604	A-5	TP104	L-5
D701	A-2	TP105	R-3
D702	A-2	TP106	S-4
D703	A-2	TP107	N-2
D704	A-6	TP108	U-6
D705	A-1	TP109	S-3
		TP110	R-3
E1	C-1	TP111	S-3
E2	D-4	TP112	S-3
E3	D-9	TP113	P-3
E4	J-1	TP114	R-3
E5	H-10	TP115	R-3
E6	P-1	TP116	P-6
E7	P-6	TP117	S-5
E8	S-9	TP118	S-5
		TP119	S-5
IC101	P-3	TP120	R-3
IC102	K-3	TP121	G-4
IC103	R-5	TP122	R-4
IC104	L-3	TP123	R-5
IC105	M-2	TP124	J-10
IC106	M-2	TP125	J-10
IC107	*M-2	TP126	J-8
IC108	*L-2	TP127	J-8
IC109	L-4	TP128	H-6
IC110	S-4	TP129	J-6
IC111	*S-4	TP602	S-7
IC112	H-9	TP601	M-1
IC113	G-8	TP602	M-1
IC114	L-8	TP603	N-1
IC115	L-8		
IC116	M-7	X101	T-4
IC117	M-9	X501	S-8
IC118	M-6		
IC119	*B-2		
IC204	M-7		
IC205	J-3		
IC206	G-3		
IC207	J-5		
IC208	G-5		
IC209	J-6		
IC210	G-6		
IC211	J-7		
IC212	G-7		
IC213	F-6		
IC301	L-9		
IC302	K-9		
IC303	J-9		
IC304	N-9		
IC305	M-9		
IC306	N-5		
IC307	H-10		
IC308	N-10		
IC309	M-10		
IC310	L-10		
IC311	K-10		
IC312	J-10		
IC313	G-9		
IC314	F-9		
IC315	E-9		
IC401	C-6		
IC402	C-4		
IC403	E-6		
IC404	E-4		
IC405	F-7		
IC406	DD-2		
IC407	C-2		
IC408	F-2		
IC409	E-2		
IC410	B-2		
IC501	P-8		
IC503	S-9		
IC504	R-7		
IC505	S-6		
IC506	R-7		
IC507	T-8		
IC508	S-6		
IC509	G-1		
IC510	H-1		
IC511	H-2		
IC512	H-2		
IC513	T-6		

* : B (Soldering) Side mount

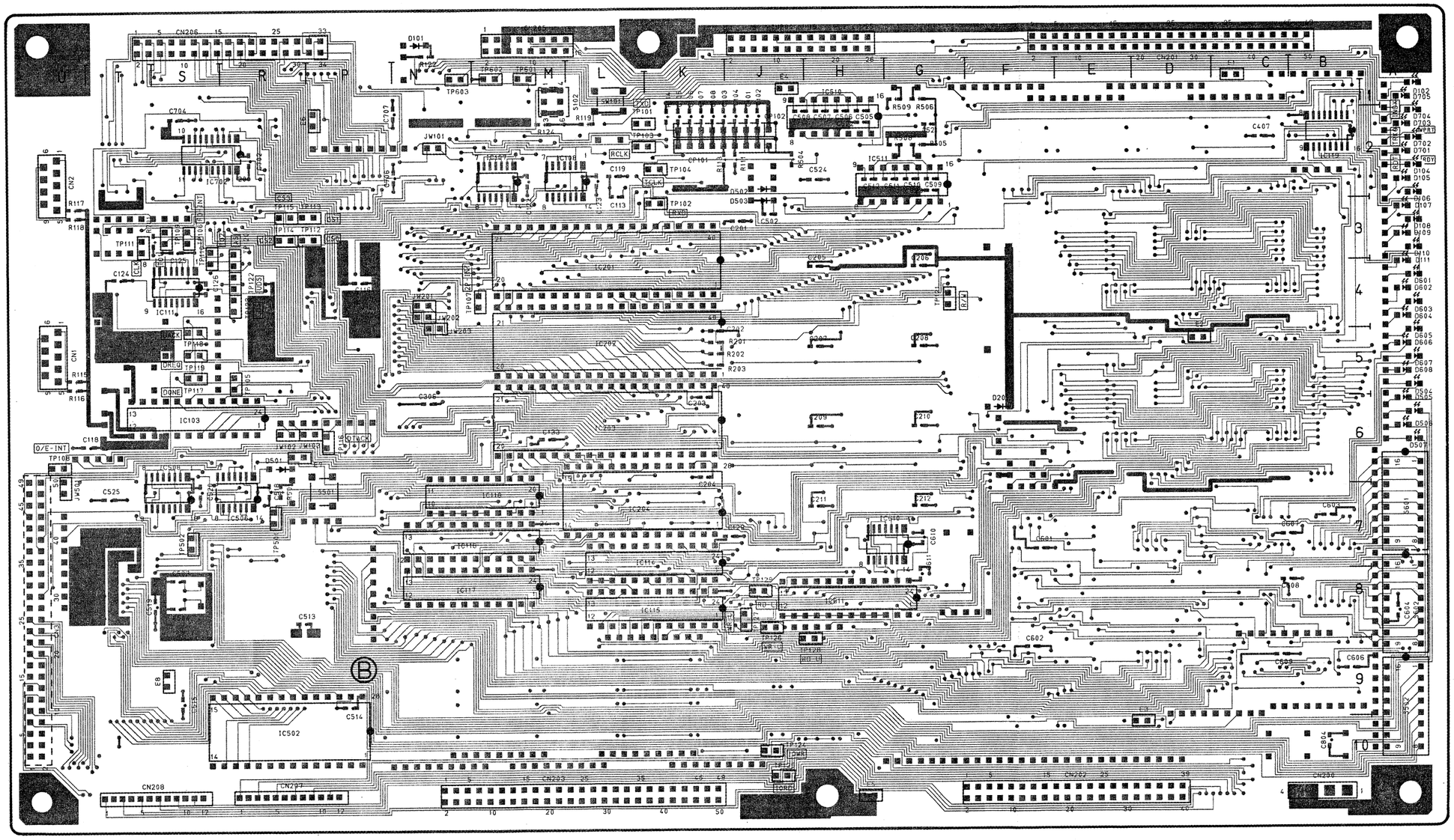

1-649-763-11

3-5

IF-413
DMX-B4008/B4016 CONSOLE

IF-413

A (Component) Side

IF-413 BOARD
1-649-764-11

CN400	A-11
CN401	C-1
CN402	B-1
CN403	D-1
CN404	C-1
CN405	G-1
CN406	G-1
CN407	K-1
CN408	M-1
CN409	J-1
CN410	L-1
CN411	M-1
CN412	K-11
CN413	L-11
CP201	A-2
CP202	A-3
CP203	B-2
CP204	B-3
CP205	C-2
CP206	C-3
D401	C-1
D402	C-1
D403	J-1
D404	J-1
D501	B-10
IC101	E-10
IC102	C-8
IC103	C-10
IC104	E-9
IC105	C-7
IC201	D-6
IC202	D-5
IC203	E-5
IC204	E-5
IC205	C-5
IC206	C-5
IC207	E-8
IC208	A-8
IC209	A-7
IC210	A-6
IC301	F-6
IC302	G-6
IC303	G-5
IC304	F-9
IC305	F-5
IC306	G-10
IC307	G-8
IC308	J-8
IC309	H-6
IC310	H-5
IC311	K-9
IC312	K-8
IC313	J-6
IC314	J-5
IC315	K-7
IC316	K-5
IC317	J-10
IC318	L-10
IC401	M-9
IC402	K-5
IC403	L-5
IC404	L-6
IC405	L-5
IC406	M-9
IC407	M-7
IC408	A-5
IC409	L-3
IC410	M-5
IC411	M-3
IC501	B-10
TPE1	A-10
TP101	B-6
TP102	B-9
TP103	E-10
TP104	B-7
TP105	C-10
TP106	E-7
TP107	G-7
TP108	J-8
TP109	M-7
TP110	A-8
TP111	A-7
TP112	A-6

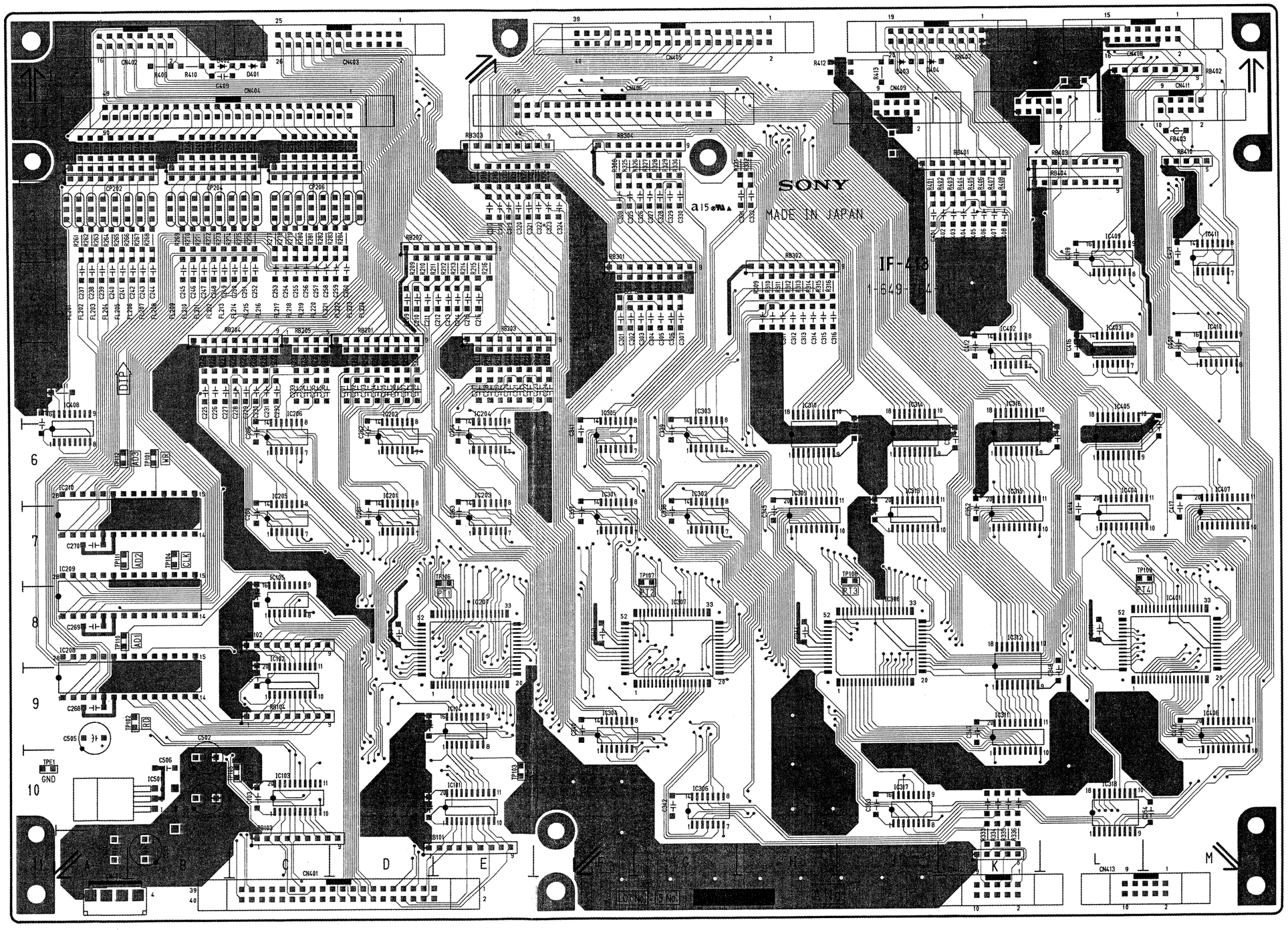

1-649-764-11

3-6

IF-413
DMX-B4008/B4016 CONSOLE

IF-413

B (Soldering) Side

IF-413 BOARD
1-649-764-11

CN400	A-11
CN401	C-11
CN402	B-1
CN403	D-1
CN404	C-1
CN405	G-1
CN406	G-1
CN407	K-1
CN408	M-1
CN409	J-1
CN410	L-1
CN411	M-1
CN412	K-11
CN413	L-11
CP201	A-2
CP202	A-3
CP203	B-2
CP204	B-3
CP205	C-2
CP206	C-3
D401	C-1
D402	C-1
D403	J-1
D404	J-1
D501	B-10
IC101	E-10
IC102	C-8
IC103	C-10
IC104	E-9
IC105	C-7
IC201	D-6
IC202	D-5
IC203	F-6
IC204	E-5
IC205	C-6
IC206	C-5
IC207	E-8
IC208	A-8
IC209	A-7
IC210	A-6
IC301	F-6
IC302	G-6
IC303	G-5
IC304	F-9
IC305	F-5
IC306	G-10
IC307	G-8
IC308	J-8
IC309	H-6
IC310	H-5
IC311	K-9
IC312	K-8
IC313	J-6
IC314	J-5
IC315	K-7
IC316	K-5
IC317	J-10
IC318	L-10
IC401	M-8
IC402	K-5
IC403	L-5
IC404	L-6
IC405	L-5
IC406	M-9
IC407	M-7
IC408	A-5
IC409	L-3
IC410	M-5
IC411	M-3
IC501	B-10
TPE1	A-10
TP101	B-6
TP102	B-9
TP103	E-10
TP104	B-7
TP105	C-10
TP106	E-7
TP107	G-7
TP108	J-8
TP109	M-7
TP110	A-8
TP111	A-7
TP112	A-6

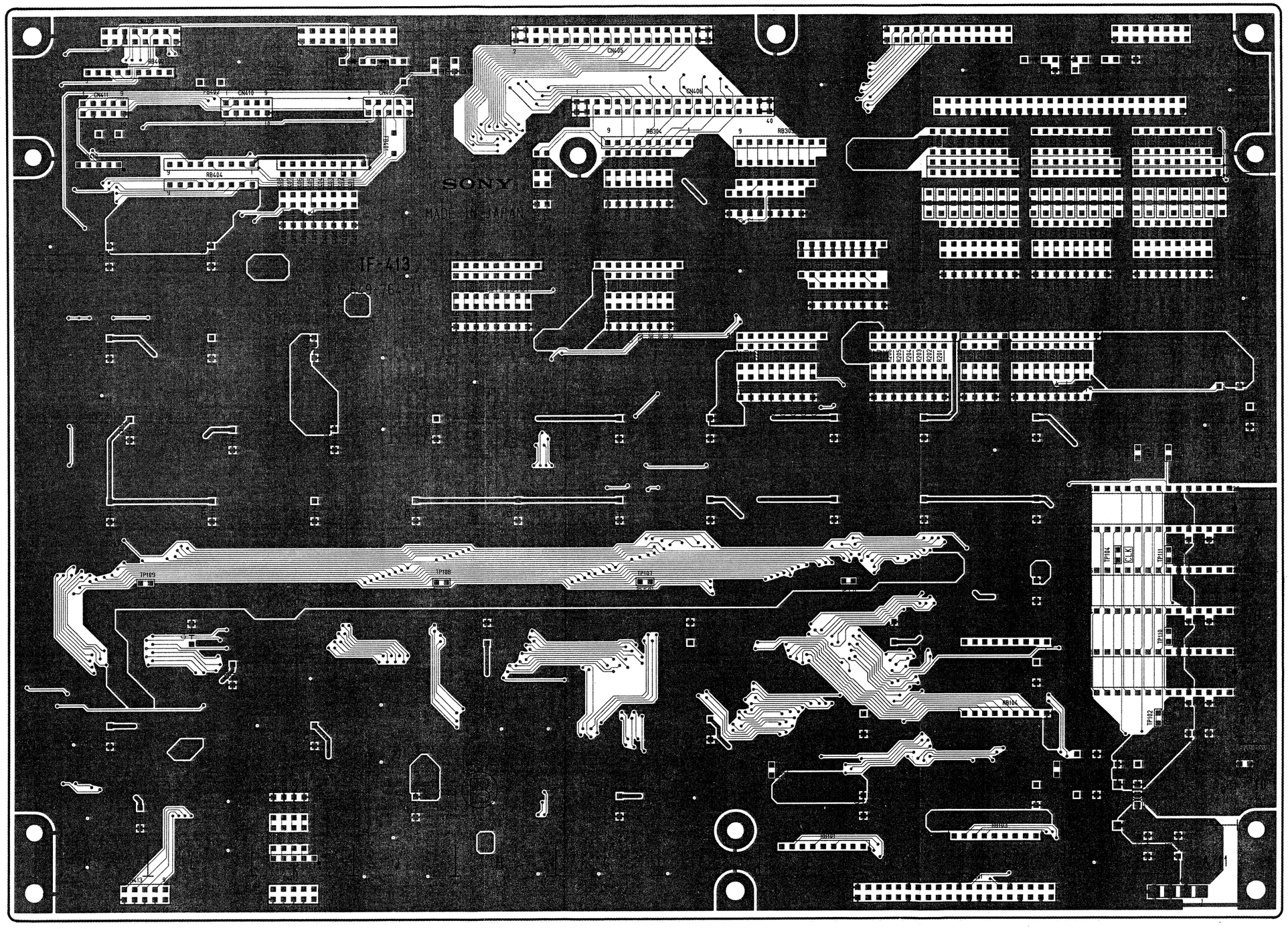

1-649-764-11

3-7

MOA-7A/7B
DMX-B4008/B4016 CONSOLE

MOA-7A/7B

A (Component) Side

MOA-7A/7B BOARD
1-649-765-11

CN1	S-1
CN2	R-1
CN3	P-1
CN4	N-1
CN5	M-1
CN6	L-1
CN7	H-1
CN8	G-1
CN9	E-1
CN10	F-1
CN11	A-1
CN500	A-14
CN501	O-3
CN502	K-3
CN503	D-3
CN504	H-14
CN505	F-14
CN506	E-14
CN507	C-14
CN508	C-14
CN509	D-14
CN510	L-14
CN511	N-14
D601	G-12
D602	G-13
D801	L-14
D802	L-14
D803	L-14
D804	L-14
D805	M-14
D806	M-14
D807	S-3
D808	S-2
D901	B-12
D902	C-13
IC101	R-8
IC102	O-8
IC103	Q-11
IC104	R-10
IC105	G-11
IC106	H-9
IC107	H-10
IC108	P-3
IC109	Q-3
IC201	Q-6
IC202	P-6
IC203	F-5
IC204	E-4
IC205	F-7
IC206	G-8
IC207	F-4
IC208	F-3
IC209	B-2
IC210	E-3
IC211	C-3
IC301	D-6
IC302	C-6
IC303	F-11
IC304	F-10
IC305	D-10
IC306	H-5
IC307	G-5
IC401	K-11
IC402	K-10
IC403	H-13
IC404	H-11
IC405	D-13
IC501	R-6
IC502	N-6
IC503	B-7
IC601	G-13
IC602	K-8
IC603	M-7
IC604	K-6
IC605	N-8
IC606	M-6
IC607	M-6
IC608	M-5
IC701	J-6
IC702	C-13
IC703	J-5
IC704	D-9
IC705	G-5
IC706	D-12
IC707	D-11
IC708	A-4
IC801	K-12
IC802	N-12
IC803	P-13
IC804	P-12
IC805	L-12
IC806	N-12
IC807	P-12
IC808	N-10
IC809	P-10
IC810	L-10
IC811	N-10
IC812	P-10
IC813	L-12
IC901	B-10
IC902	B-12
Q601	G-12
Q801	J-3
Q802	N-2
Q803	M-4
RV101	G-10
RV102	J-9
RV201	H-7
RV202	F-5
RV203	B-5
RV204	B-4
RV301	F-12
RV302	G-11
RV401	E-12
RV402	E-13
RV501	J-8
RV502	B-8
RV601	J-8
RV602	J-7
RV603	L-7
RV604	L-7
RV605	M-7
RV606	M-7
RV701	H-6
RV702	H-6
RV703	J-6
RV704	G-6
RV705	E-8
RY101	N-3
RY102	S-3
RY103	M-2
RY104	S-2
RY201	H-2
RY202	G-2
RY203	F-2
RY204	C-1
RY301	L-2
RY302	J-2
RY701	A-1
TPE1	B-9
TPE2	J-13
TP101	R-11
TP102	O-10
TP103	S-9
TP104	O-9
TP105	G-12
TP106	J-10
TP201	R-5
TP202	Q-5
TP203	R-7
TP204	Q-7
TP205	E-7
TP206	H-7
TP301	E-6
TP302	E-7
TP303	D-5
TP304	D-7
TP305	C-10
TP306	E-10
TP401	H-13
TP402	H-12
TP501	S-5
TP502	S-7
TP503	P-5
TP504	P-7
TP505	B-4
TP506	C-4
TP601	J-8
TP602	J-7
TP603	K-7
TP604	L-8
TP701	J-5
TP702	K-6
TP703	C-10
TP704	C-12
TP705	G-6
TP706	D-11
TP707	C-11

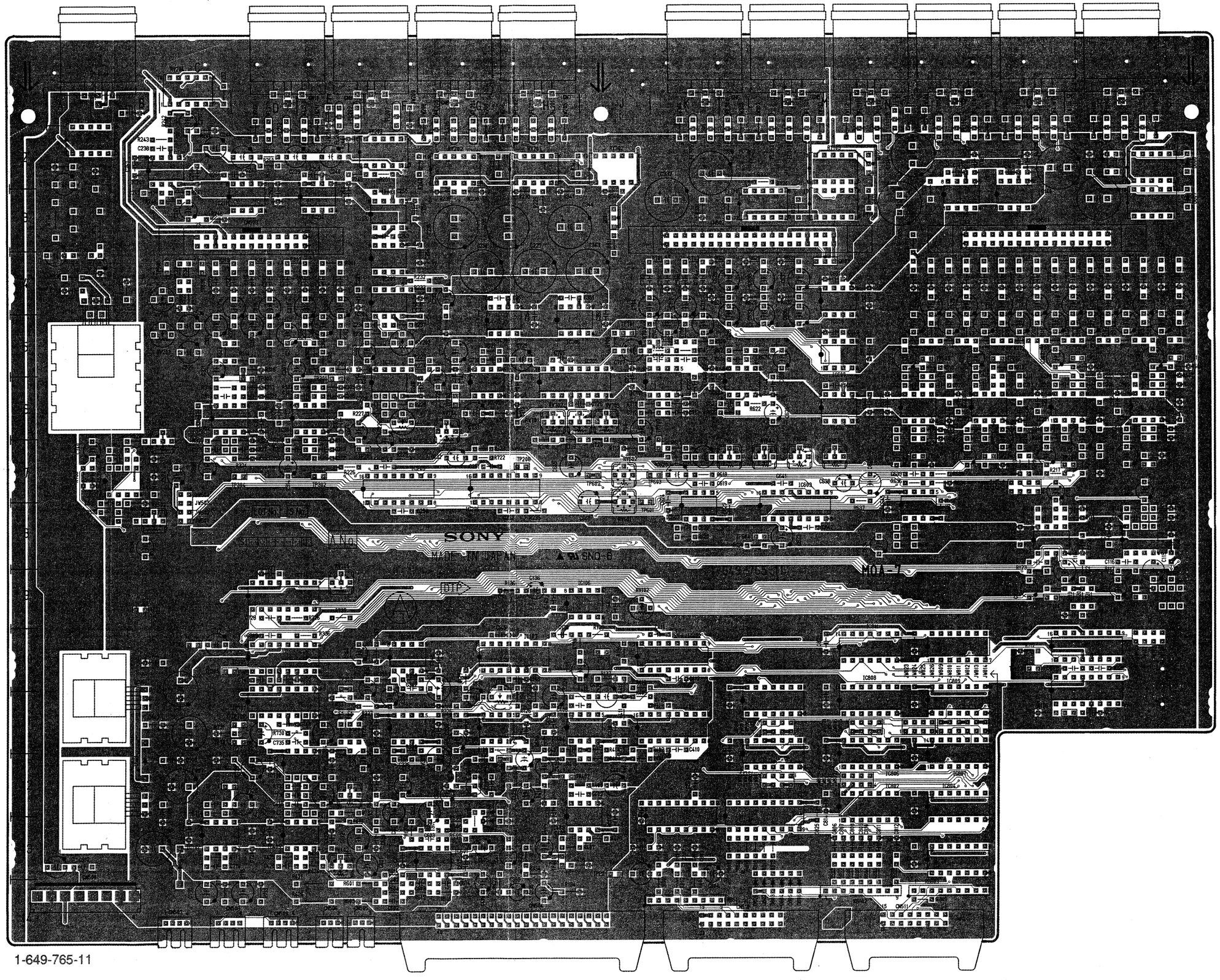

MOA-7A/7B
DMX-B4008/B4016 CONSOLE

MOA-7A/7B

B (Soldering) Side

MOA-7A/7B BOARD
1-649-765-11

CN1	S-1	RV101	G-10
CN2	P-1	RV102	J-9
CN3	P-1	RV201	F-7
CN4	N-1	RV202	F-5
CN5	M-1	RV203	B-5
CN6	L-1	RV204	B-4
CN7	H-1	RV301	F-12
CN8	G-1	RV302	G-11
CN9	E-1	RV401	E-12
CN10	E-1	RV402	E-13
CN11	A-1	RV501	C-6
CN500	A-14	RV502	B-8
CN501	Q-3	RV601	J-8
CN502	K-3	RV602	J-7
CN503	D-3	RV603	L-7
CN504	H-14	RV604	M-7
CN505	E-14	RV605	M-7
CN506	E-14	RV606	M-7
CN507	C-14	RV701	H-6
CN508	C-14	RV702	H-6
CN509	D-14	RV703	J-6
CN510	L-14	RV704	G-6
CN511	N-14	RV705	E-6
D601	G-12	RY101	N-3
D602	G-13	RY102	S-3
D801	L-14	RY103	M-2
D802	L-14	RY104	S-2
D803	L-14	RY201	H-2
D804	L-14	RY202	G-2
D805	M-14	RY203	F-2
D806	M-14	RY204	C-1
D807	S-3	RY301	L-2
D808	S-2	RY302	J-2
D901	B-12	RY701	A-1
D902	C-13	TPE1	B-9
		TPE2	J-13
IC101	R-8		
IC102	Q-8	TP101	R-11
IC103	Q-11	TP102	G-10
IC104	R-10	TP103	S-9
IC105	G-11	TP104	O-9
IC106	H-9	TP105	G-12
IC107	H-10	TP106	J-10
IC108	P-3	TP201	R-5
IC109	Q-3	TP202	Q-5
IC201	Q-6	TP203	R-7
IC202	P-6	TP204	Q-7
IC203	F-5	TP205	F-7
IC204	E-4	TP206	H-7
IC205	F-7	TP301	E-6
IC206	G-8	TP302	E-7
IC207	F-4	TP303	D-6
IC208	E-3	TP304	D-7
IC209	B-2	TP305	C-10
IC210	E-3	TP306	C-10
IC211	C-3	TP401	H-13
IC501	D-6	TP402	H-12
IC302	C-6	TP501	S-5
IC303	F-11	TP502	S-7
IC304	E-10	TP503	P-5
IC305	D-10	TP504	P-7
IC306	H-5	TP505	B-4
IC307	G-5	TP506	C-4
IC401	K-11	TP601	J-8
IC402	K-10	TP602	J-7
IC403	H-13	TP603	K-7
IC404	H-11	TP604	L-8
IC405	D-13	TP701	J-5
IC501	R-6	TP702	K-6
IC502	N-6	TP703	C-10
IC503	B-7	TP704	C-12
IC601	G-13	TP705	G-6
IC602	K-8	TP706	D-11
IC603	M-7	TP707	C-11
IC604	K-6		
IC605	N-8		
IC606	M-6		
IC607	M-6		
IC608	M-5		
IC701	J-6		
IC702	C-13		
IC703	J-5		
IC704	C-9		
IC705	G-6		
IC706	D-12		
IC707	D-11		
IC708	A-4		
IC801	K-12		
IC802	N-12		
IC803	P-13		
IC804	P-12		
IC805	L-12		
IC806	N-12		
IC807	P-12		
IC808	N-10		
IC809	P-10		
IC810	L-10		
IC811	N-10		
IC812	P-10		
IC813	L-12		
IC901	B-10		
IC902	B-12		
Q601	G-12		
Q801	L-3		
Q802	N-2		
Q803	M-4		

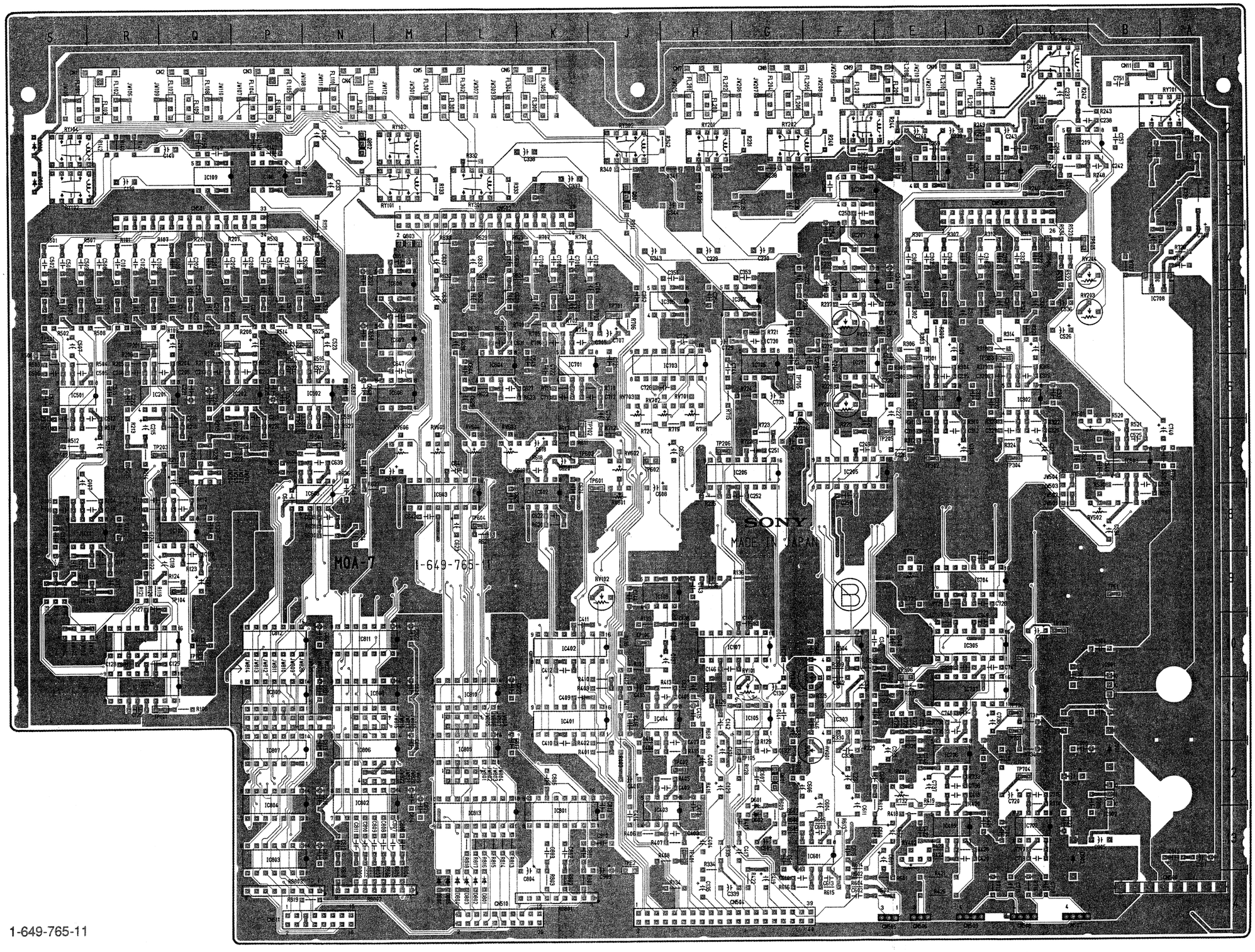

1-649-765-11

3-9

KY-225 DMBK-4010 (OPTION)
DMX-B4008/B4016 CONSOLE

KY-225

A (Component) Side

KY-225 BOARD
1-649-760-11

CN101	*G-1
CN102	*C-1
CN103	*B-5
CN104	*F-5
CN105	C-3
CN106	G-3
CN107	*A-3
D101	A-1
E101	*B-3
FB401	*A-3
FB402	*A-3
IC101	C-1
IC102	D-1
IC103	C-2
IC104	G-1
IC105	D-2
IC106	D-2
IC107	A-1
IC108	A-1
IC201	H-2
IC202	G-2
IC203	E-1
IC204	E-2
IC205	F-1
IC206	F-2
IC207	H-1
IC301	E-3
IC302	C-3
IC303	H-3
IC304	E-4
IC305	F-3
IC306	B-4
IC307	D-3
IC308	G-4
IC501	H-2
IC502	H-3
IC503	A-5
IC504	B-4
IC505	C-4
IC506	D-4
IC507	F-4
IC508	G-4
IC509	H-4
IC510	J-4
S101	*B-3
S601	A-1
S602	B-1
S603	C-1
S604	D-1
S605	F-1
S606	G-1
S607	H-1
S608	J-1
S609	A-2
S610	B-2
S611	C-2
S612	D-2
S613	F-2
S614	G-2
S615	H-2
S616	J-2

* : B (Soldering) Side mount

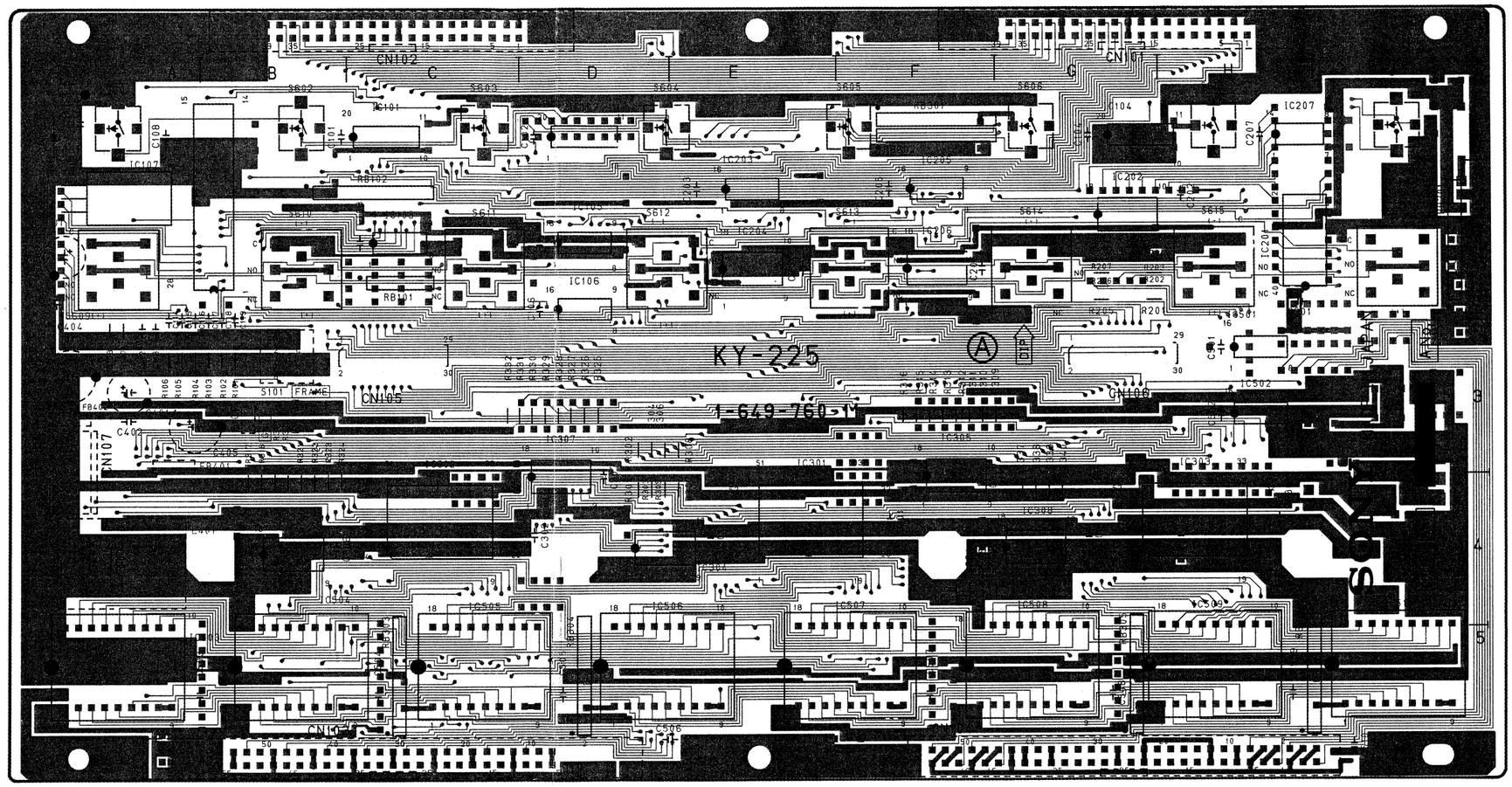

1-649-760-11

3-10

KY-225

B (Soldering) Side

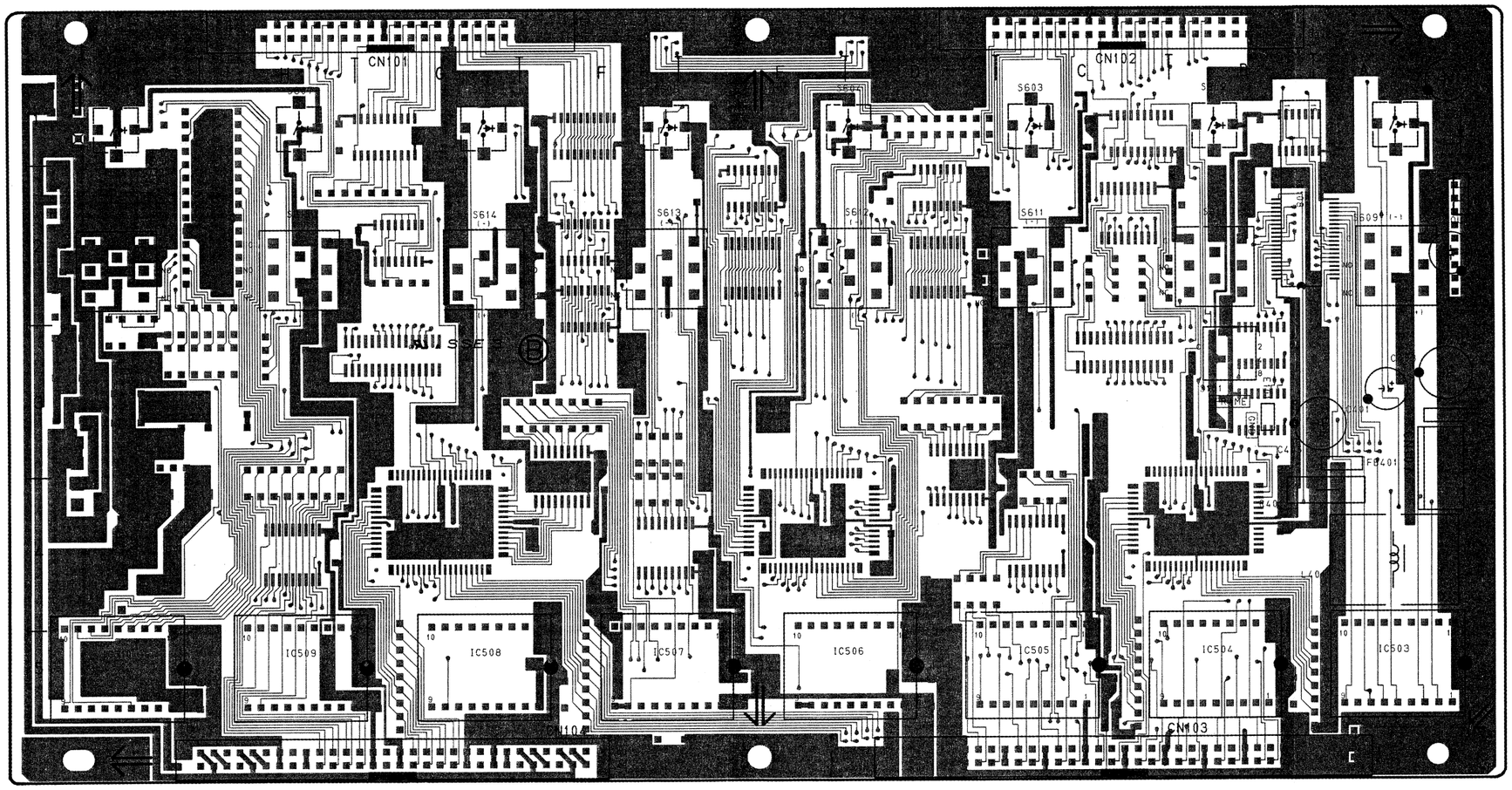

1-649-760-11

KY-225 BOARD
1-649-760-11

CN101	*G-1
CN102	*C-1
CN103	*B-5
CN104	*F-5
CN105	C-3
CN106	G-3
CN107	*A-3
D101	A-1
E101	*B-3
FB401	*A-3
FB402	*A-3
IC101	C-1
IC102	D-1
IC103	C-2
IC104	G-1
IC105	D-2
IC106	D-2
IC107	A-1
IC108	A-1
IC201	H-2
IC202	G-2
IC203	E-1
IC204	F-2
IC205	F-1
IC206	F-2
IC207	H-1
IC301	E-3
IC302	C-3
IC303	H-3
IC304	F-4
IC305	F-3
IC306	B-4
IC307	D-3
IC308	G-4
IC501	H-2
IC502	J-3
IC503	A-5
IC504	B-4
IC505	C-4
IC506	D-4
IC507	F-4
IC508	G-4
IC509	H-4
IC510	J-4
S101	*B-3
S601	A-1
S602	B-1
S603	C-1
S604	D-1
S605	F-1
S606	G-1
S607	H-1
S608	J-1
S609	A-2
S610	B-2
S611	C-2
S612	D-2
S613	F-2
S614	G-2
S615	H-2
S616	J-2

* : B (Soldering) Side mount

3-11

IF-421
DMX-B4008/B4016 METER UNIT

IF-421

A (Component) Side

IF 421 BOARD
1-649-750-11

CN101	*A-5
CN111	D-1
CN121	J-7
D201	G-4
D202	G-4
D203	G-4
D204	G-4
D205	H-4
D206	H-5
D207	H-4
D208	H-5
D209	G-5
D210	G-5
D211	G-5
D212	G-5
D502	C-4
D503	C-4
D504	C-4
D505	C-4
E101	E-5
FB201	J-7
IC101	G-1
IC102	J-2
IC103	D-2
IC104	C-6
IC105	D-5
IC106	D-6
IC107	D-7
IC108	D-5
IC109	B-5
IC110	C-5
IC111	B-6
IC112	B-6
IC113	C-7
IC201	G-4
IC202	E-6
IC203	E-8
IC204	F-4
IC205	F-4
IC206	H-6
Q101	B-1
Q102	B-1
Q103	B-2
Q104	B-2
Q105	B-2
Q106	B-2
Q107	B-3
Q108	B-3
Q109	B-4
Q110	B-4
S101	C-9
S102	C-2
TP102	E-3
TP103	E-3
TP104	E-4
TP105	C-1
TP202	F-5
TP203	G-4
TP204	F-6
X101	D-5

*: B (Soldering) Side mount

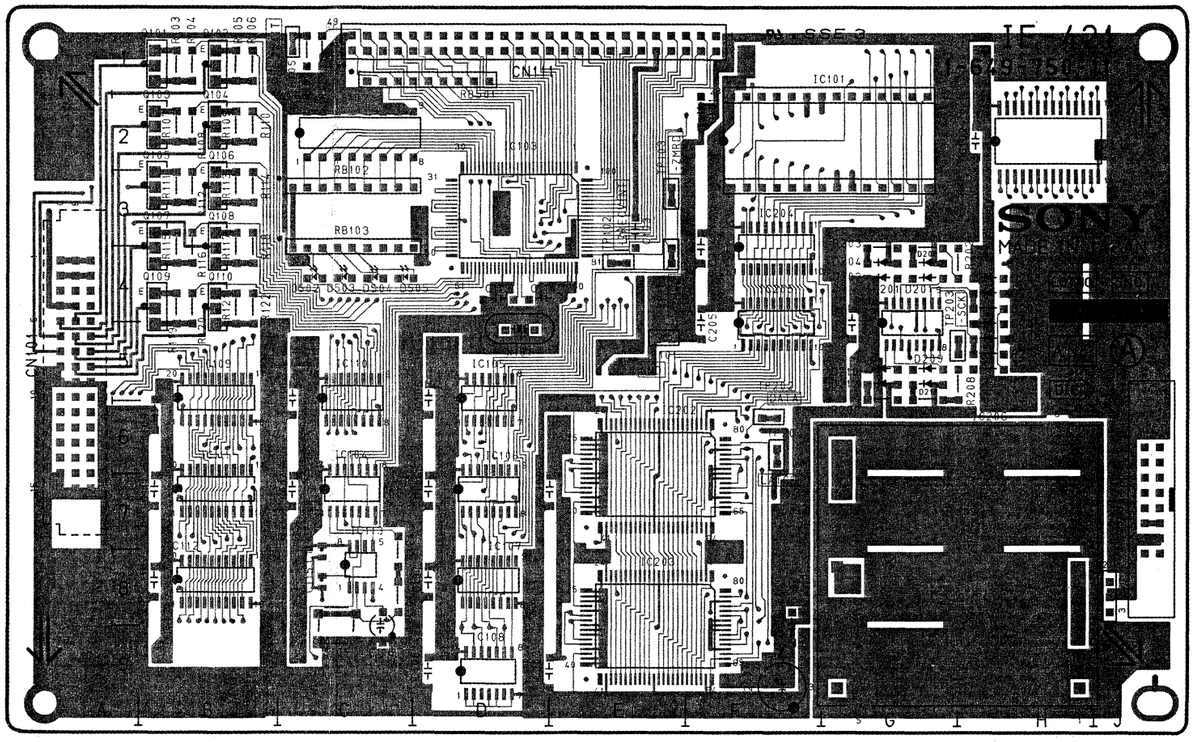

1-649-750-11

3-12

IF-421
DMX-B4008/B4016 METER UNIT

IF-421

B (Soldering) Side

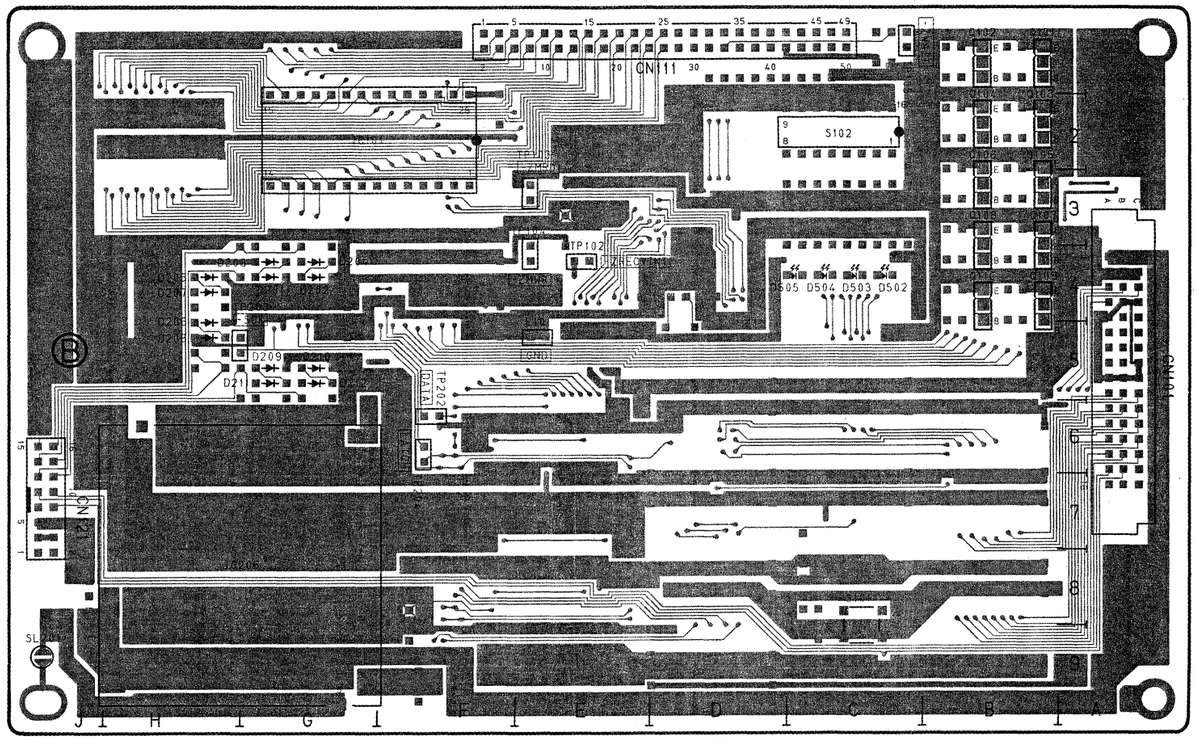

1-649-750-11

IF 421 BOARD
1-649-750-11

CN101	*A-5
CN111	D-1
CN121	J-7
D201	G-4
D202	G-4
D203	G-4
D204	G-4
D205	H-4
D206	H-5
D207	H-4
D208	H-5
D209	G-5
D210	G-5
D211	G-5
D212	G-5
D502	C-4
D503	C-4
D504	C-4
D505	C-4
E101	E-5
FB201	J-7
IC101	G-1
IC102	J-2
IC103	D-2
IC104	C-6
IC105	D-5
IC106	D-6
IC107	D-7
IC108	D-9
IC109	B-5
IC110	C-5
IC111	B-6
IC112	B-8
IC113	C-7
IC201	G-4
IC202	E-6
IC203	E-8
IC204	F-3
IC205	F-4
IC206	H-5
Q101	B-1
Q102	B-1
Q103	B-2
Q104	B-2
Q105	B-2
Q106	B-2
Q107	B-3
Q108	B-3
Q109	B-4
Q110	B-4
S101	C-9
S102	C-2
TP102	E-3
TP103	E-3
TP104	E-4
TP105	C-1
TP202	F-5
TP203	G-4
TP204	F-6
X101	D-5

* : B (Soldering) Side mount

3-13

MT-88
DMX-B4008/B4016 METER UNIT

MT-88

A (Component) Side

MT-88 BOARD
1-649-751-11

CN301	*A-5
D301	B-1
D302	B-1
D303	D-1
D304	D-1
D305	F-1
D306	F-1
D307	H-2
D308	H-4
D309	H-5
D310	H-5
D311	H-6
D312	H-8
IC301	C-5
IC302	C-7
IC303	C-8
IC304	C-1
IC305	C-3
IC306	C-4
IC307	E-5
IC308	E-7
IC309	E-8
IC310	E-1
IC311	E-3
IC312	E-4
IC313	J-7
IC314	H-8
IC315	J-7
IC316	H-1
IC317	H-3
IC318	H-5
S301	J-8
S302	K-8
S303	M-8

*: B (Soldering) Side mount

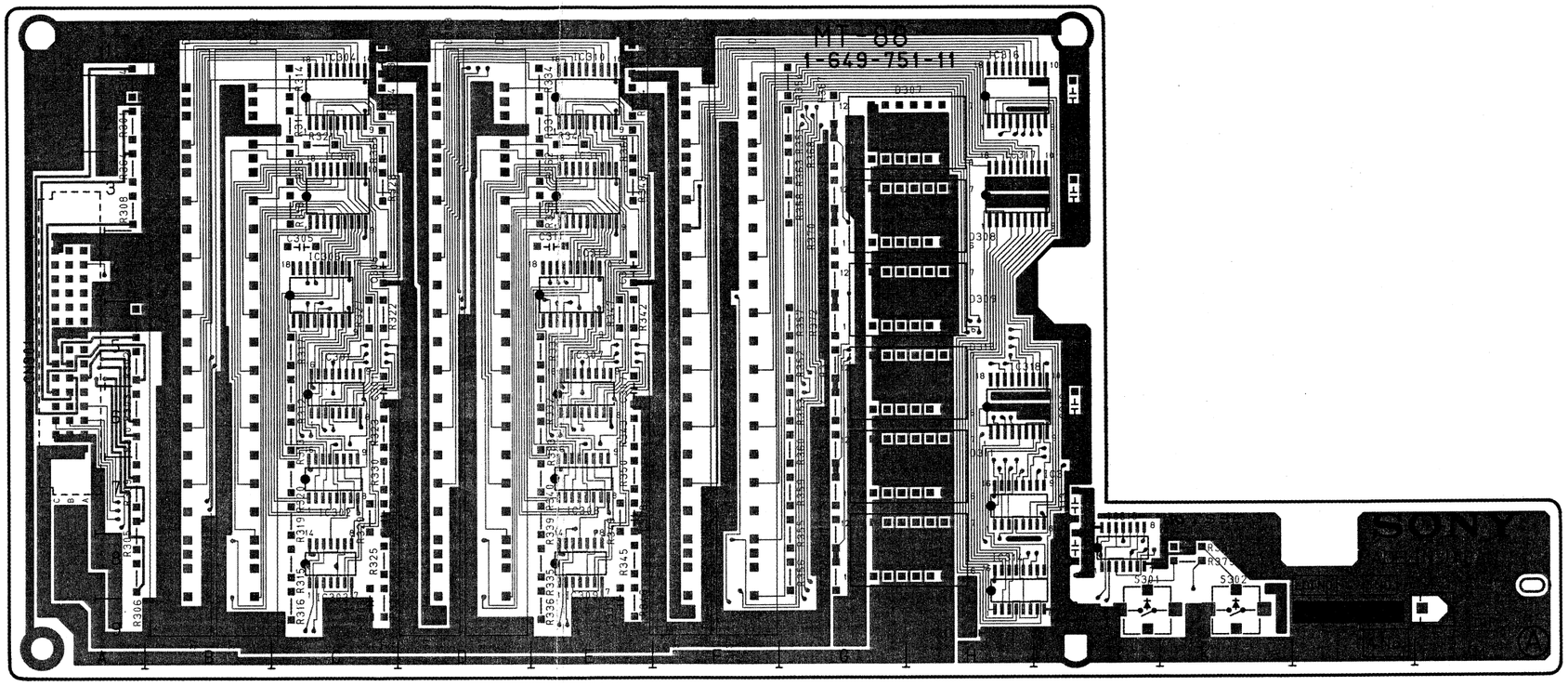

1-649-751-11

3-14

MT-88
DMX-B4008/B4016 METER UNIT

MT-88

B (Soldering) Side

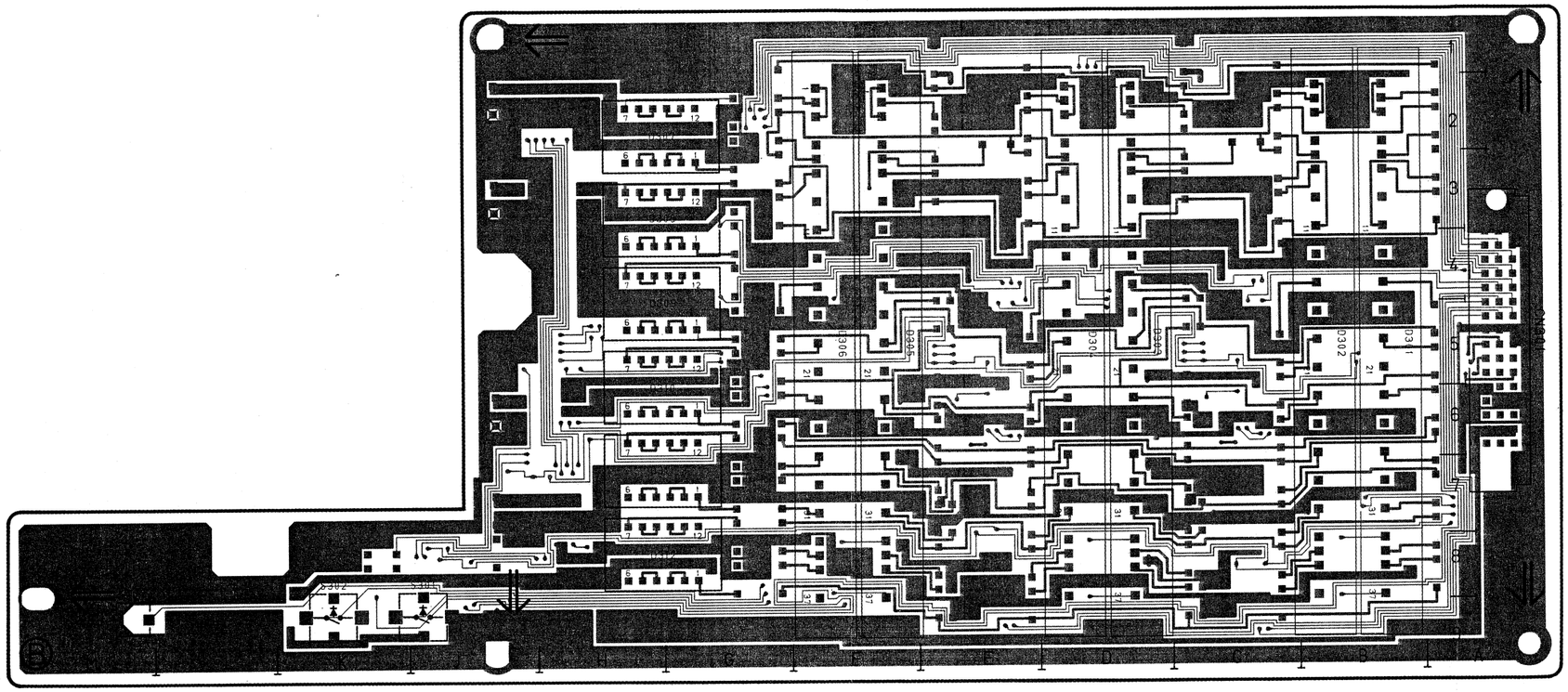

1-649-751-11

MT-88 BOARD
1-649-751-11

CN301	*A-5
D301	B-1
D302	B-1
D303	D-1
D304	D-1
D305	F-1
D306	F-1
D307	H-2
D308	H-4
D309	H-5
D310	H-5
D311	H-6
D312	H-8
IC301	C-5
IC302	C-7
IC303	C-8
IC304	C-1
IC305	C-3
IC306	C-4
IC307	E-5
IC308	E-7
IC309	E-8
IC310	E-1
IC311	E-3
IC312	E-4
IC313	J-7
IC314	H-8
IC315	J-7
IC316	H-1
IC317	H-3
IC318	H-5
S301	J-8
S302	K-8
S303	M-8

*: B (Soldering) Side mount

3-15

PS-312
DMX-B4008/B4016 CONSOLE

PS-312

A (Component) Side

PS-312 BOARD
1-649-908-11, 12

CN901	A-2
CN902	A-4
CN903	C-2
CN904	D-2
CN905	EF-2
CN906	EF-2
CN907	FG-2
CN908	G-2
CN909	GH-2
CN910	CC-5
CN911	D-5
CN912	E-5
CN913	EF-5
CN914	F-5
CN915	G-5
CN916	G-3
CN917	H-5
CN918	I-5
CN919	J-5
D901	D-3
D902	BB-4
D903	BB-2
D904	B-2
PH901	J-2
PH902	J-3
PH903	J-3

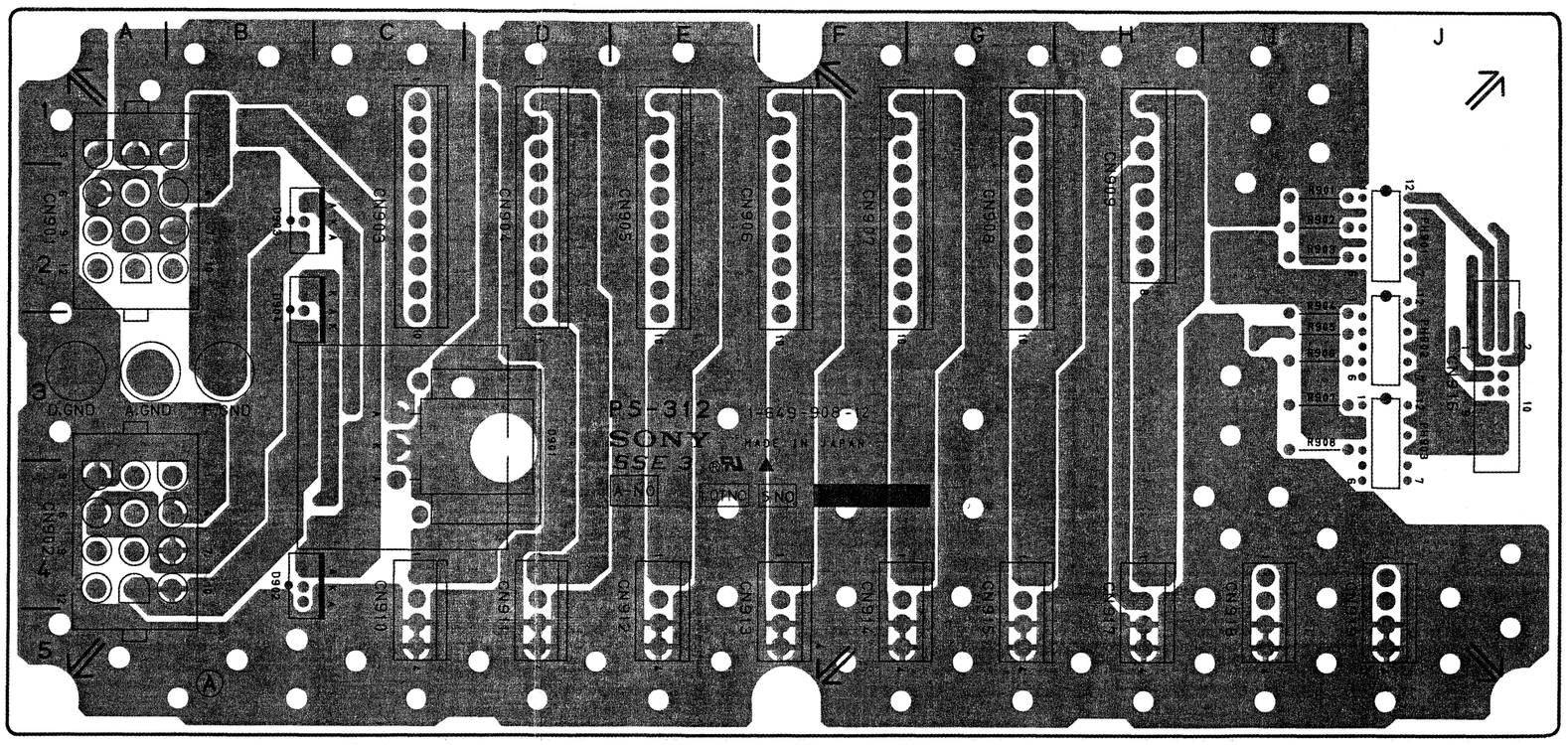

1-649-908-11, 12

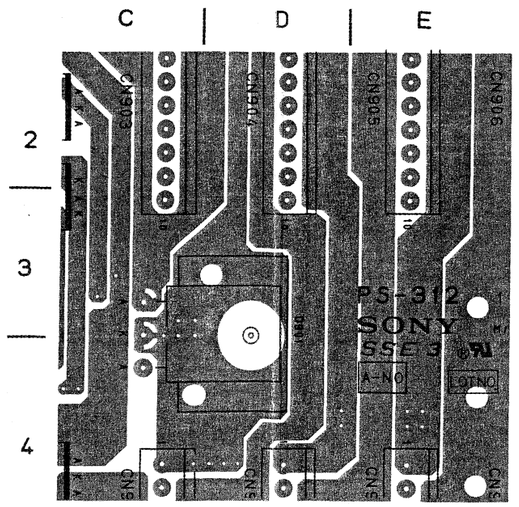

1-649-908-11 only

3-16

PS-312
DMX-B4008/B4016 CONSOLE

PS-312

B (Soldering) Side

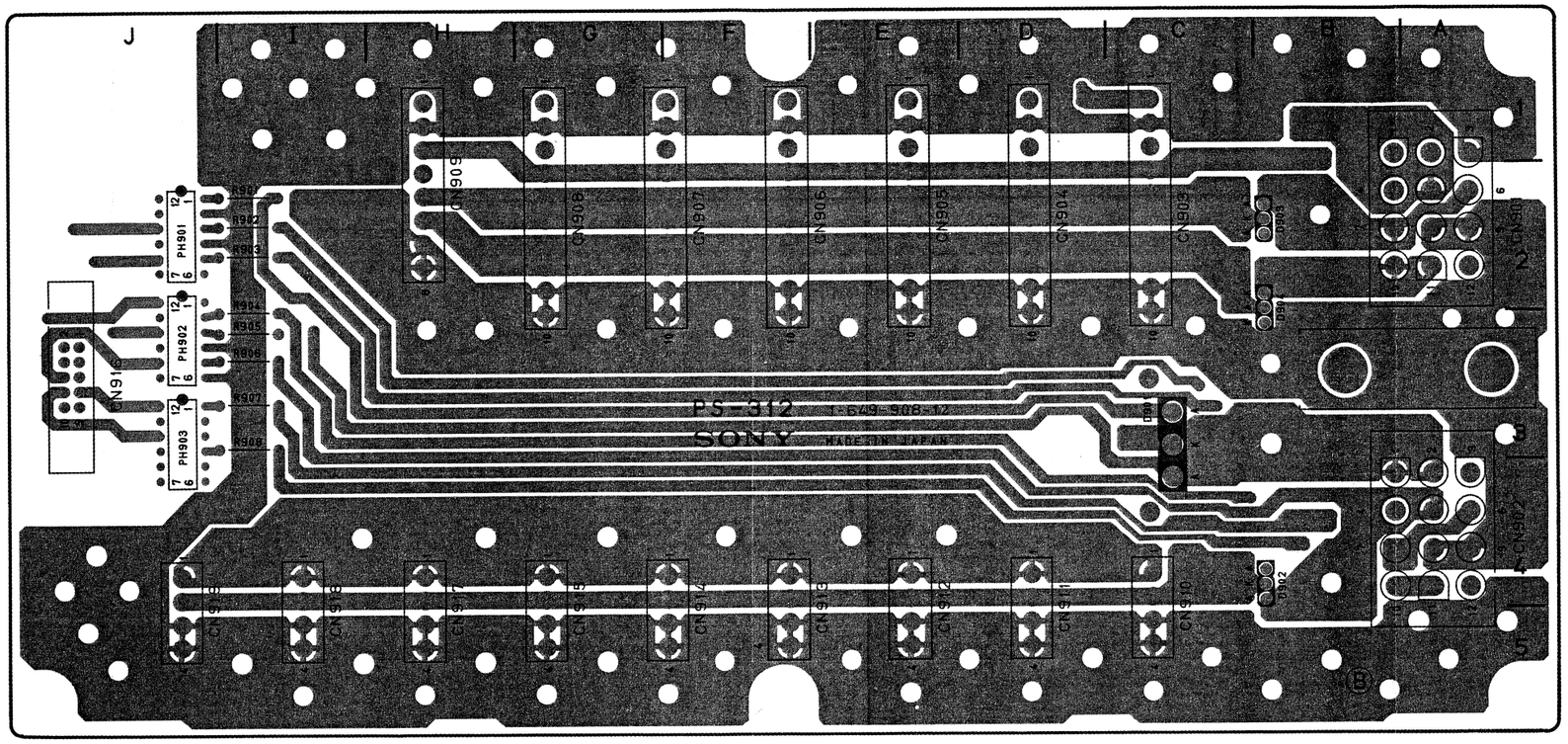

1-649-908-11, 12

PS-312 BOARD
1-649-908-11, 12

CN901	A-2
CN902	A-4
CN903	C-2
CN904	C-2
CN905	D-2
CN906	D-2
CN907	E-2
CN908	E-2
CN909	F-2
CN910	G-2
CN911	G-2
CN912	H-2
CN913	H-2
CN914	I-2
CN915	I-2
CN916	I-2
CN917	J-2
CN918	J-2
CN919	J-2
D901	D-3
D902	B-4
D903	B-4
D904	B-2
PH901	J-2
PH902	J-3
PH903	J-3

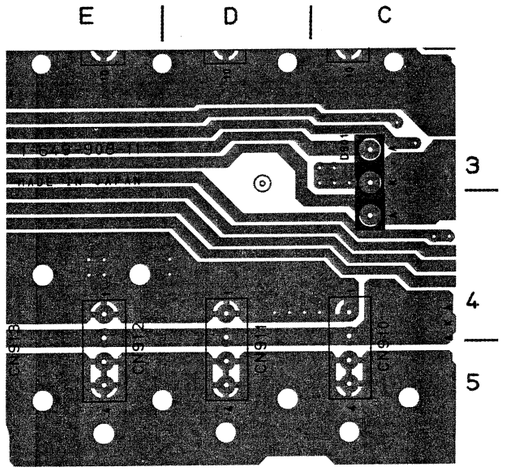

1-649-908-11 only

3-17

SW-604

SW-604 BOARD
1-649-761-11

CN111	*B-1
CN112	*B-1
CN113	*C-1
CN114	*D-1
CN115	*E-1
CN116	*F-1
CN117	*G-1
CN118	*H-1
CN119	*C-1
S1	A-1
S2	B-1
S3	C-1
S4	D-1
S5	E-1
S6	F-1
S7	G-1
S8	H-1

*: B (Soldering) Side mount

A (Component) Side

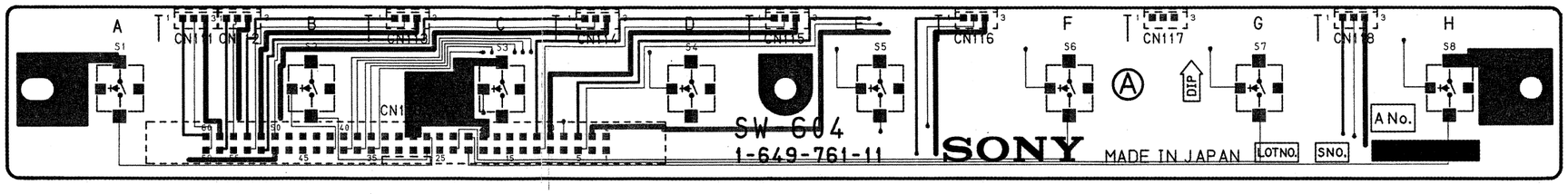

1-649-761-11

B (Soldering) Side

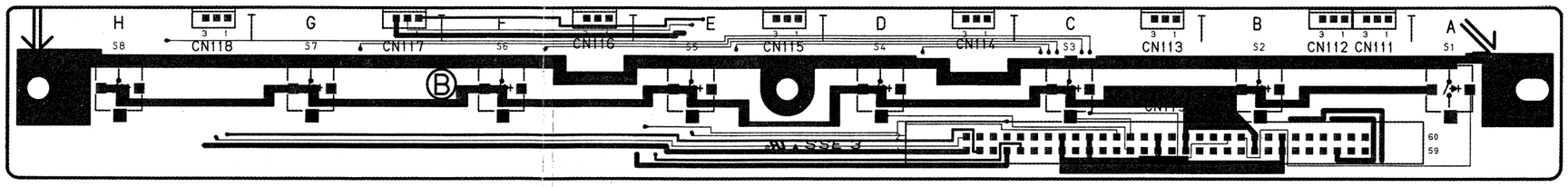

1-649-761-11

SW-605

A (Component) Side

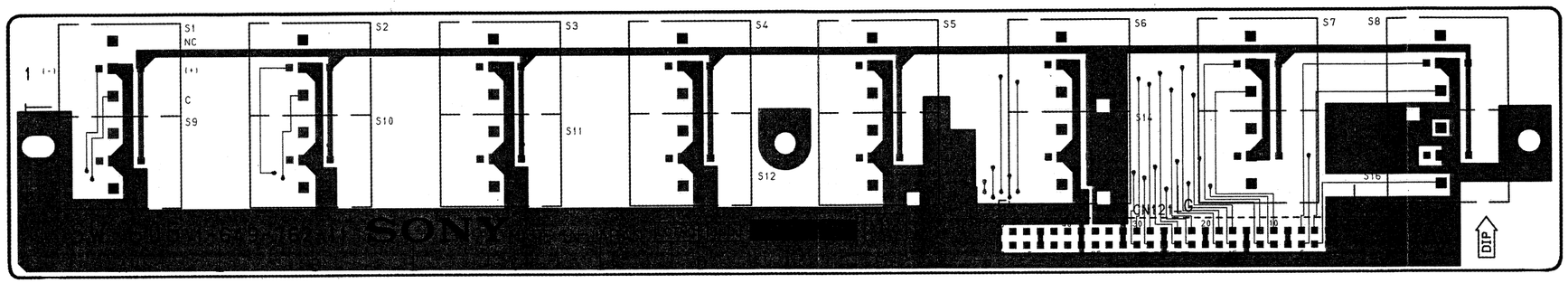

1-649-762-11

SW-605 BOARD
1-649-762-11

CN121	*F-12
S1	A-1
S2	B-1
S3	C-1
S4	D-1
S5	E-1
S6	F-1
S7	G-1
S8	H-1
S9	A-2
S10	B-2
S11	C-2
S12	D-2
S13	E-2
S14	F-2
S15	G-2
S16	H-2

* : B (Soldering) Side mount

B (Soldering) Side

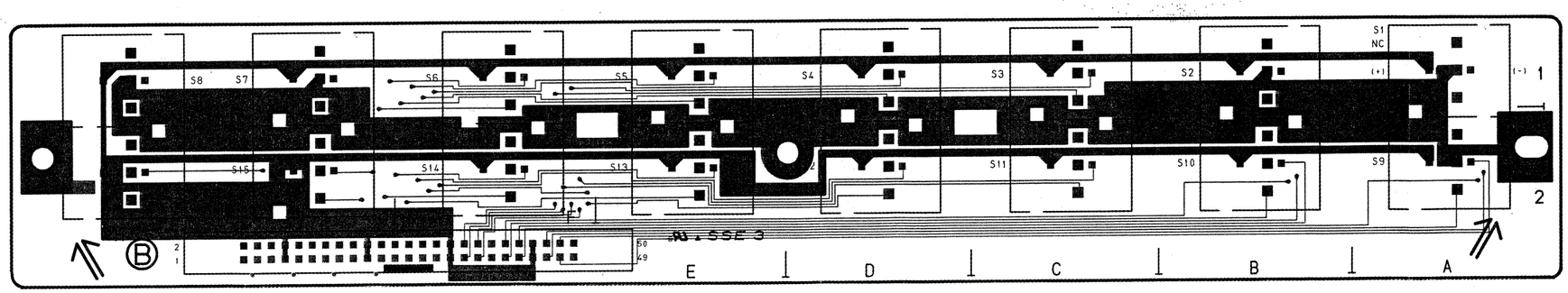

1-649-762-11

3-19

CN-838/839
DMX-B4008/B4016 CONSOLE

CN-838

A (Component) Side

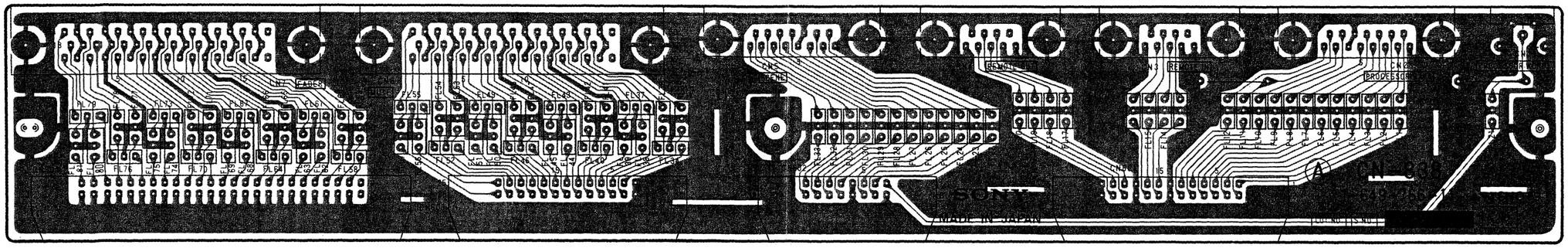

1-649-766-11

CN-838 BOARD
1-649-766-11

CN1	D-1
CN2	D-2
CN3	C-1
CN4	C-1
CN5	C-1
CN6	B-1
CN7	A-1
CN601	C-1
CN602	C-1
CN603	B-1
CN604	A-1

CN-839

A (Component) Side

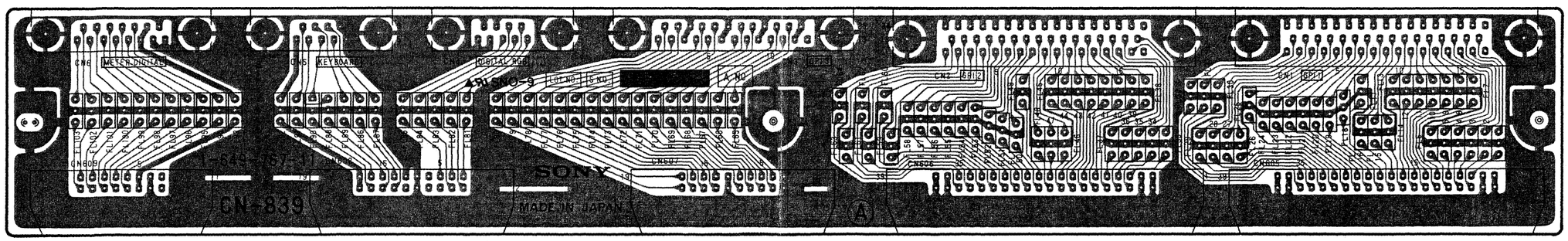

1-649-767-11

CN-839 BOARD
1-649-767-11

CN1	D-1
CN2	C-1
CN3	C-1
CN4	B-1
CN5	A-1
CN6	A-1
CN605	D-1
CN606	C-1
CN607	B-1
CN608	A-1
CN609	A-1

3-20

CN-840A/840B
DMX-B4008/B4016 CONSOLE

CN-840A/840B

A (Component) Side

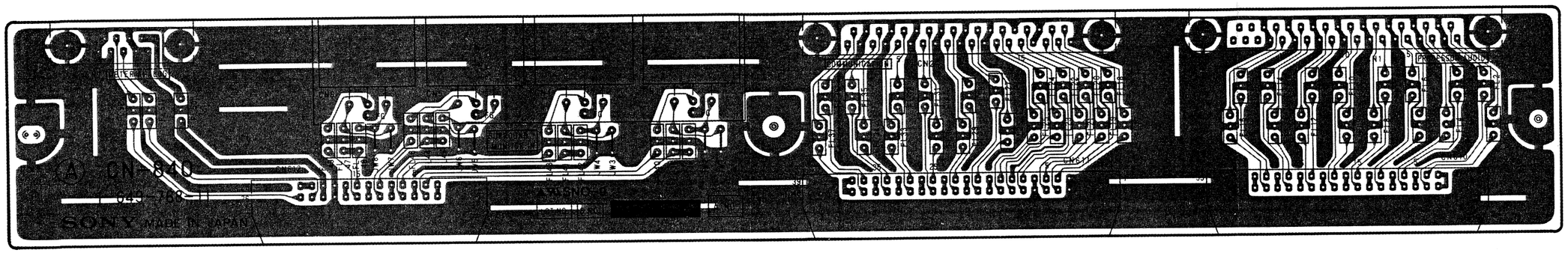

1-649-768-11

CN-840A/840B BOARD
1-649-768-11

CN1	D-1
CN2	C-1
CN3	B-1
CN4	B-1
CN5	B-1
CN6	B-1
CN7	A-1
CN610	D-1
CN611	C-1
CN612	A-1

3-21

MIC, SW-606, VR-165
DMX-B4008/B4016 CONSOLE

VR-165

B (Soldering) Side

VR-165 BOARD
1-649-754-11

CN101	A-2
CN613	A-2
CN614	A-2
CN615	A-2
CN616	A-2
CN617	B-2
CN618	B-2
CN619	B-2
RV1	A-1
RV2	A-1
RV3	B-1
RV4	B-1
RV5	B-1

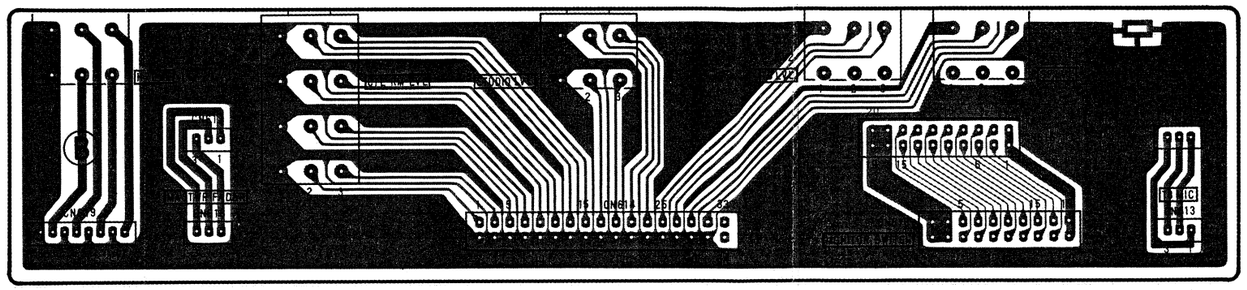

1-649-754-11

MIC

A (Component) Side

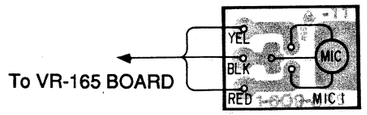

1-609-885-11

SW-606

B (Soldering) Side

SW-606 BOARD
1-649-755-11

SW1	B-1
SW2	B-1
SW3	B-1
SW4	A-1
SW5	A-1
SW6	A-1
SW7	A-1

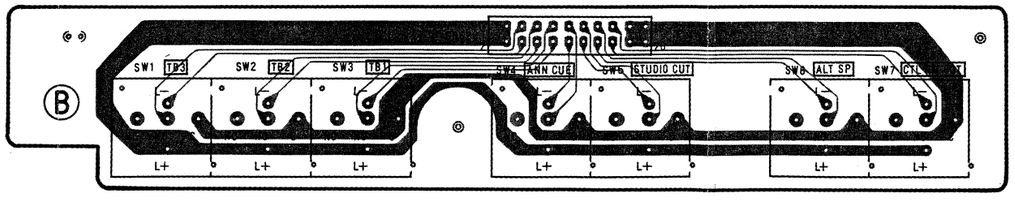

1-649-755-11

3-22

LED-156

A (Component) Side

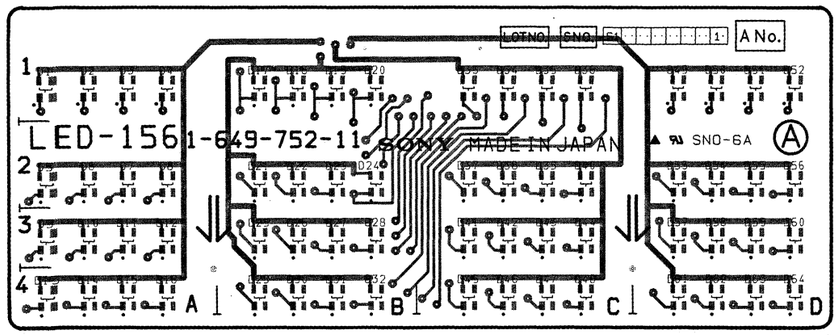

1-649-752-11

B (Soldering) Side

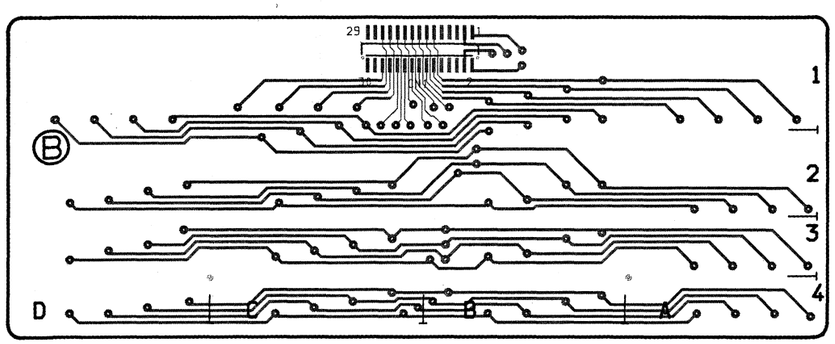

1-649-752-11

LED-156 BOARD
1-649-752-11

CN1	*C-1
D1	A-1
D2	A-1
D3	A-1
D4	A-1
D5	A-2
D6	A-2
D7	A-2
D8	A-2
D9	A-3
D10	A-3
D11	A-3
D12	A-3
D13	A-4
D14	A-4
D15	A-4
D16	A-4
D17	B-1
D18	B-1
D19	B-1
D20	B-1
D21	B-2
D22	B-2
D23	B-2
D24	B-2
D25	B-3
D26	B-3
D27	B-3
D28	B-3
D29	B-4
D30	B-4
D31	B-4
D32	B-4
D33	C-1
D34	C-1
D35	C-1
D36	C-1
D37	C-2
D38	C-2
D39	C-2
D40	C-2
D41	C-3
D42	C-3
D43	C-3
D44	C-3
D45	C-4
D46	C-4
D47	C-4
D48	C-4
D49	D-1
D50	D-1
D51	D-1
D52	D-1
D53	D-2
D54	D-2
D55	D-2
D56	D-2
D57	D-3
D58	D-3
D59	D-3
D60	D-3
D61	D-4
D62	D-4
D63	D-4
D64	D-4

* : B (Soldering) Side mount

CN-841

A (Component) Side

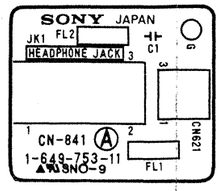

1-649-753-11

B (Soldering) Side

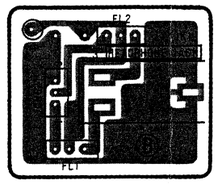

1-649-753-11

CPU-164
DMX-B4008 PROCESSOR

3-2. DMX-B4008 PROCESSOR

CPU-164

A (Component) Side

CPU-164 BOARD
1-649-769-11

CN1	B-1	RV701	H-4
CN2	J-1	RV702	H-4
CN3	B-9	RV703	H-4
CN4	C-9		
CN5	F-9	S101	D-10
CN6	H-9	S102	D-10
CN7	J-9	S103	D-10
		S301	H-10
DB1	A-2	S302	H-10
DB2	A-1	S303	E-10
		S501	J-9
D32	J-2	S502	K-9
D101	C-10	S503	K-9
D103	C-10	S504	K-9
D104	C-10		
D105	D-10	TP101	B-6
D106	D-10	TP102	D-3
D107	D-10	TP103	B-7
D108	D-10	TP301	H-6
D201	D-5	TP302	H-6
D301	F-10	TP303	H-6
D303	G-10	TP304	H-6
D304	G-10	TP713	K-3
D305	G-10	TP714	K-2
D306	G-10	TP715	H-4
D307	G-10		
D308	H-10	X1	B-7
D501	H-10	X708	J-3
D502	H-10	X709	J-3
D503	H-10	X710	H-3
D505	J-10		
D705	J-3		
D706	J-3		
D719	J-5		
D720	H-5		
D721	J-4		
D722	H-4		
D723	J-3		
D724	H-4		
E1	A-3		
E2	B-5		
E3	K-7		
E4	L-2		
E5	K-5		
E6	F-6		
IC101	A-3		
IC102	A-2		
IC103	B-6		
IC104	B-7		
IC105	A-6		
IC106	A-7		
IC107	C-5		
IC108	C-5		
IC109	C-7		
IC110	B-5		
IC111	B-6		
IC112	A-5		
IC113	B-7		
IC114	A-8		
IC115	A-7		
IC201	C-1		
IC202	C-3		
IC203	C-2		
IC204	C-4		
IC205	D-2		
IC206	D-4		
IC207	D-5		
IC301	H-7		
IC302	K-6		
IC303	G-8		
IC307	K-6		
IC308	G-8		
IC309	H-8		
IC310	L-7		
IC311	L-6		
IC312	G-7		
IC313	H-8		
IC314	G-7		
IC315	G-7		
IC401	E-3		
IC403	G-3		
IC404	G-5		
IC405	G-4		
IC406	G-5		
IC501	E-1		
IC502	E-2		
IC503	G-2		
IC504	K-9		
IC505	K-9		
IC506	K-9		
IC507	L-9		
IC508	K-7		
IC509	H-9		
IC510	F-2		
IC511	K-7		
IC512	G-2		
IC513	H-2		
IC514	H-2		
IC515	G-2		
IC516	H-2		
IC517	G-2		
IC701	K-2		
IC710	J-4		
IC711	H-5		
IC712	H-4		
IC722	K-2		
IC723	L-2		
IC731	J-2		
IC737	K-4		
IC739	K-2		
IC740	K-4		
IC741	K-4		
IC742	K-4		
IC749	J-1		
IC751	J-3		
IC760	K-3		
IC761	K-3		
IC762	K-3		
IC781	H-2		
IC782	H-2		
IC783	J-1		
IC785	L-2		
LPF1	K-2		
LPF2	K-1		
LPF3	K-1		
Q11	J-2		
Q704	J-5		
Q705	H-5		
Q706	H-4		
Q707	H-4		
Q708	H-4		
Q709	H-4		
Q710	H-4		

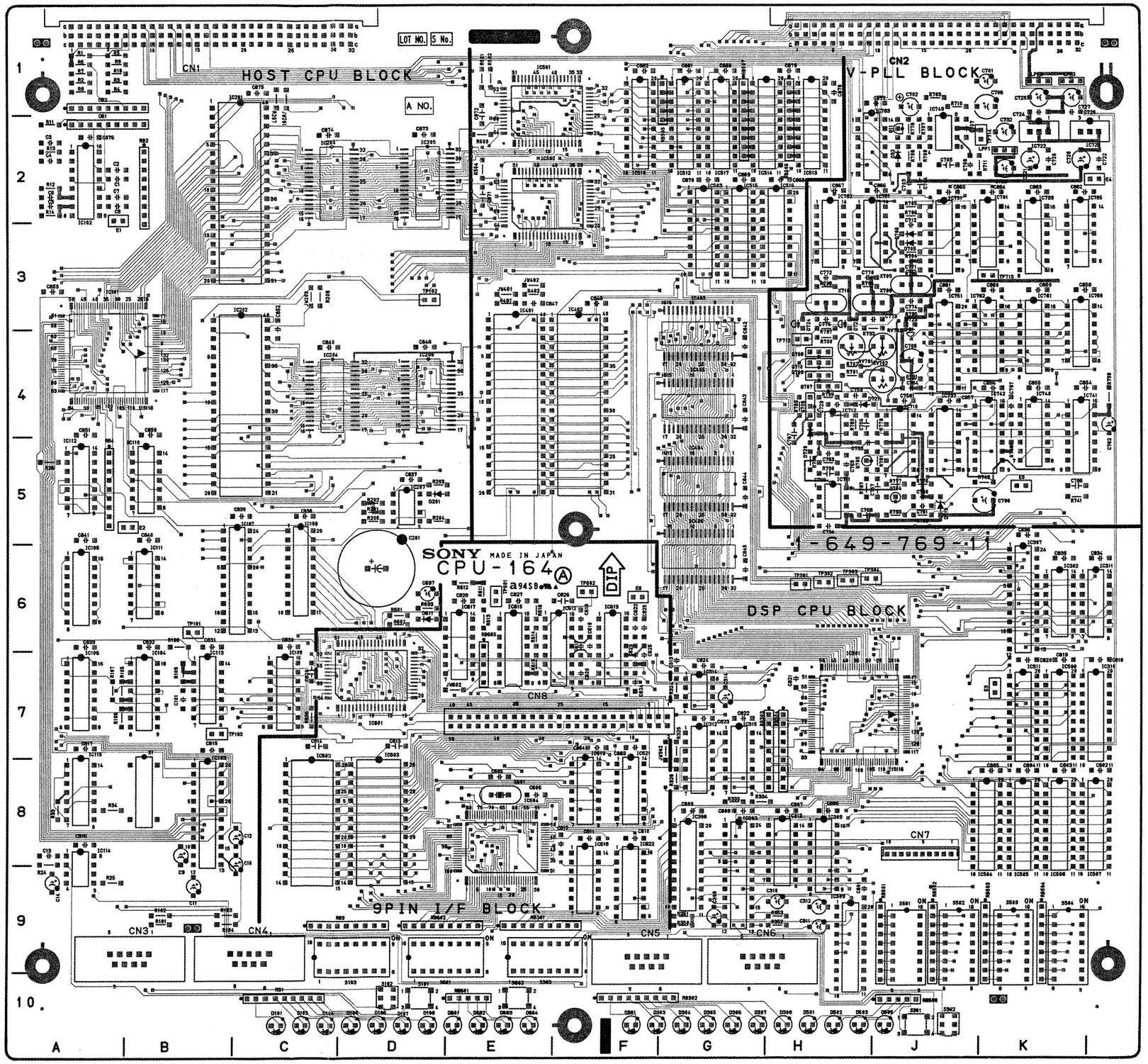

1-649-769-11

3-24

CPU-164 DMX-B4008 PROCESSOR

CPU-164

B (Soldering) Side

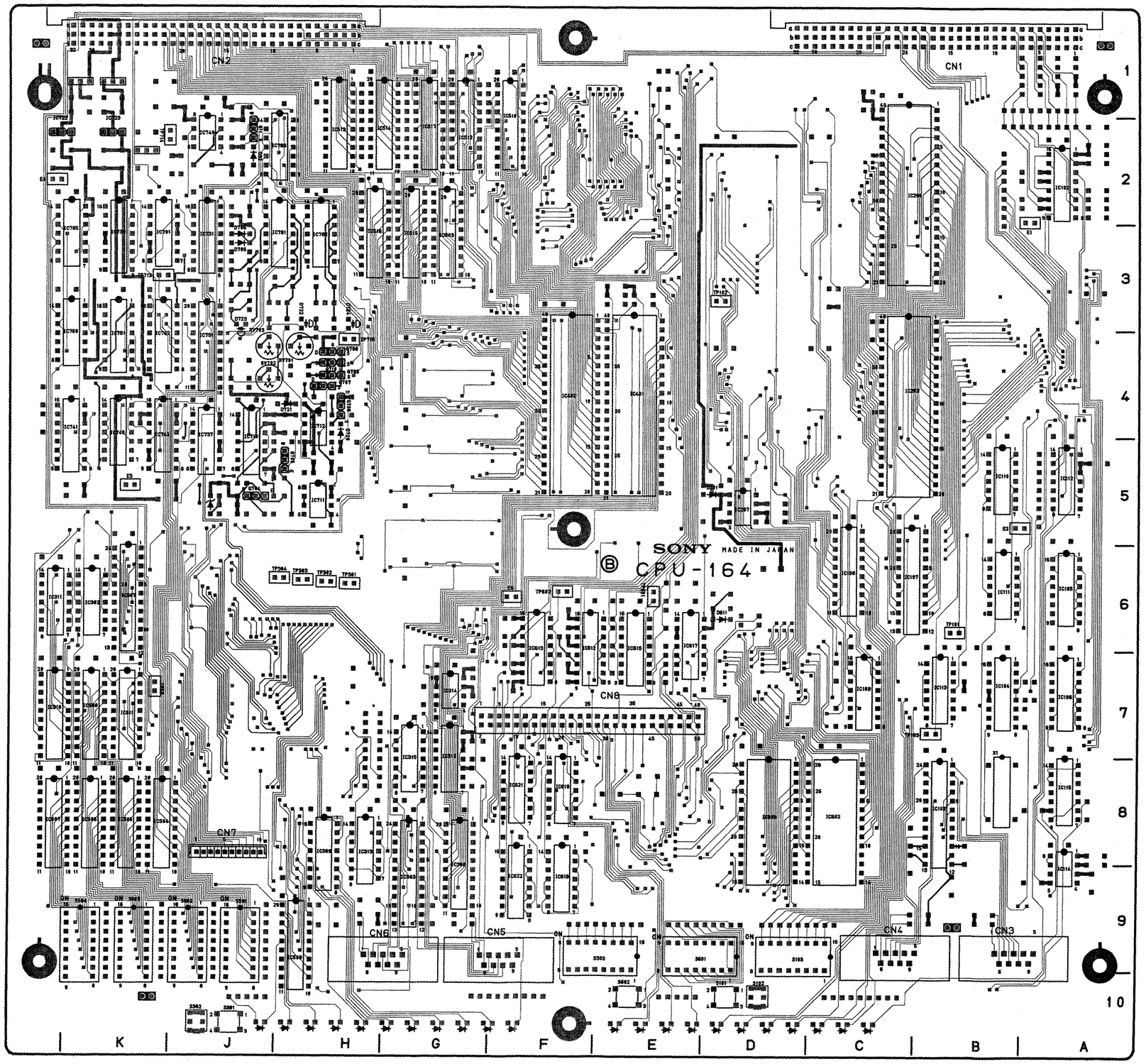

CPU-164 BOARD
1-649-769-11

CN1	B-1	RV701	H-4
CN2	J-1	RV702	J-4
CN3	B-9	RV703	J-4
CN4	C-9		
CN5	F-9	S101	D-10
CN6	H-9	S102	D-10
CN7	J-8	S103	D-10
		S301	D-10
DB1	A-2	S302	D-10
DB2	A-1	S303	D-10
		S501	J-9
D32	J-2	S502	J-9
D101	C-10	S503	K-9
D103	C-10	S504	K-9
D104	C-10		
D105	D-10	TP101	B-6
D106	D-10	TP102	D-3
D107	D-10	TP103	B-7
D108	D-10	TP301	H-5
D201	D-5	TP302	H-5
D301	F-10	TP303	H-5
D303	G-10	TP304	H-5
D304	G-10	TP713	K-3
D305	G-10	TP714	K-2
D306	G-10	TP715	H-4
D307	G-10		
D308	H-10	X1	B-7
D501	H-10	X708	J-3
D502	H-10	X709	J-3
D503	H-10	X710	H-3
D505	J-10		
D705	J-3		
D706	J-3		
D719	H-5		
D720	H-5		
D721	J-4		
D722	H-4		
D723	J-3		
D724	H-4		
E1	A-3		
E2	B-5		
E3	K-7		
E4	L-2		
E5	K-5		
E6	F-6		
IC101	A-3		
IC102	A-2		
IC103	B-8		
IC104	B-7		
IC105	A-6		
IC106	A-7		
IC107	C-5		
IC108	C-5		
IC109	C-7		
IC110	B-5		
IC111	B-6		
IC112	A-5		
IC113	B-7		
IC114	A-8		
IC115	A-7		
IC201	C-1		
IC202	C-3		
IC203	C-2		
IC204	C-4		
IC205	D-2		
IC206	D-4		
IC207	D-5		
IC301	H-7		
IC302	K-6		
IC303	G-8		
IC307	K-6		
IC308	G-8		
IC309	H-8		
IC310	L-7		
IC311	L-6		
IC312	G-7		
IC313	H-8		
IC314	G-7		
IC315	G-7		
IC401	E-3		
IC403	G-3		
IC404	G-5		
IC405	G-4		
IC406	G-5		
IC501	F-1		
IC502	E-2		
IC503	G-2		
IC504	K-9		
IC505	K-9		
IC506	K-9		
IC507	J-9		
IC508	K-7		
IC509	H-9		
IC510	F-2		
IC511	K-7		
IC512	G-2		
IC513	H-2		
IC514	H-2		
IC515	G-2		
IC516	H-2		
IC517	G-2		
IC701	K-2		
IC710	J-4		
IC711	H-5		
IC712	H-4		
IC722	K-2		
IC723	L-2		
IC731	J-2		
IC737	J-4		
IC739	K-2		
IC740	K-4		
IC741	L-4		
IC742	K-4		
IC749	J-1		
IC751	J-3		
IC760	J-3		
IC761	K-3		
IC782	K-3		
IC781	J-2		
IC792	H-2		
IC793	J-1		
IC785	L-2		
LPF1	K-2		
LPF2	K-1		
LPF3	K-1		
Q11	J-2		
Q704	J-5		
Q705	H-5		
Q706	H-4		
Q707	H-4		
Q708	H-4		
Q709	H-4		
Q710	H-4		

3-25

DIO-26
DMX-B4008 PROCESSOR

DIO-26

A (Component) Side

DIO-26 BOARD
1-649-771-11

CN1	C-1
CN2	M-1
D1	J-14
D2	J-14
D3	K-14
D4	K-14
D5	L-14
D6	L-14
D7	L-14
D8	M-14
D9	M-14
D10	G-9
D11	F-9
D12	N-14
E1	K-2
E2	R-5
E3	P-8
E4	P-14
E5	H-2
E6	K-9
E7	M-10
E8	H-4
E9	F-8
E10	H-10
E11	G-12
IC1	R-1
IC2	P-1
IC3	M-1
IC4	P-1
IC5	N-1
IC6	R-2
IC7	P-2
IC8	P-3
IC9	N-3
IC10	P-4
IC11	P-2
IC12	P-4
IC13	J-13
IC14	N-9
IC15	N-8
IC16	R-10
IC17	P-11
IC18	P-11
IC19	P-14
IC20	P-14
IC21	F-2
IC22	K-11
IC23	N-11
IC24	L-11
IC25	M-14
IC26	L-14
IC27	J-4
IC28	L-2
IC29	L-4
IC30	L-5
IC31	L-8
IC32	K-9
IC33	K-2
IC34	K-4
IC35	K-5
IC36	K-7
IC37	K-8
IC38	N-8
IC39	M-5
IC41	R-4
IC42	P-4
IC44	N-5
IC45	P-5
IC46	P-6
IC47	P-7
IC48	P-7
IC49	R-7
IC50	M-5
IC51	P-6
IC52	M-4
IC53	P-5
IC54	P-5
IC55	N-7
IC56	P-5
IC57	G-4
IC58	J-5
IC59	G-6
IC60	G-7
IC61	G-7
IC62	G-2
IC65	F-9
IC66	F-13
IC67	E-8
IC68	E-8
IC69	E-11
IC70	E-14
IC91	P-5
IC92	L-1
IC100	R-8
IC101	M-3
IC102	N-3
IC103	H-12
IC104	H-11
IC105	K-1
IC106	H-12
IC107	H-12
IC108	H-11
IC109	H-12
IC110	L-5
IC500	J-13
IC501	M-7
IC502	G-1
IC503	F-1
IC504	H-13
IC505	G-13
IC506	R-8
IC507	N-8
IC700	C-5
IC701	D-5
IC710	D-8
IC711	D-8
IC720	D-11
IC721	D-11
IC730	D-14
IC731	D-14
IC740	E-3
IC741	E-6
IC742	E-9
IC743	E-12
IC744	E-6
IC745	E-9
IC746	E-11
IC747	E-14
IC801	C-4
IC802	C-6
IC803	C-9
IC804	C-12
Q1	F-9
RV1	D-4
RV2	D-7
RV3	D-10
RV4	D-13
RY1	B-4
RY2	B-7
RY3	B-10
RY4	B-13
S1	N-14
TP1	R-5
TP2	P-8
X1	N-7
X2	J-1

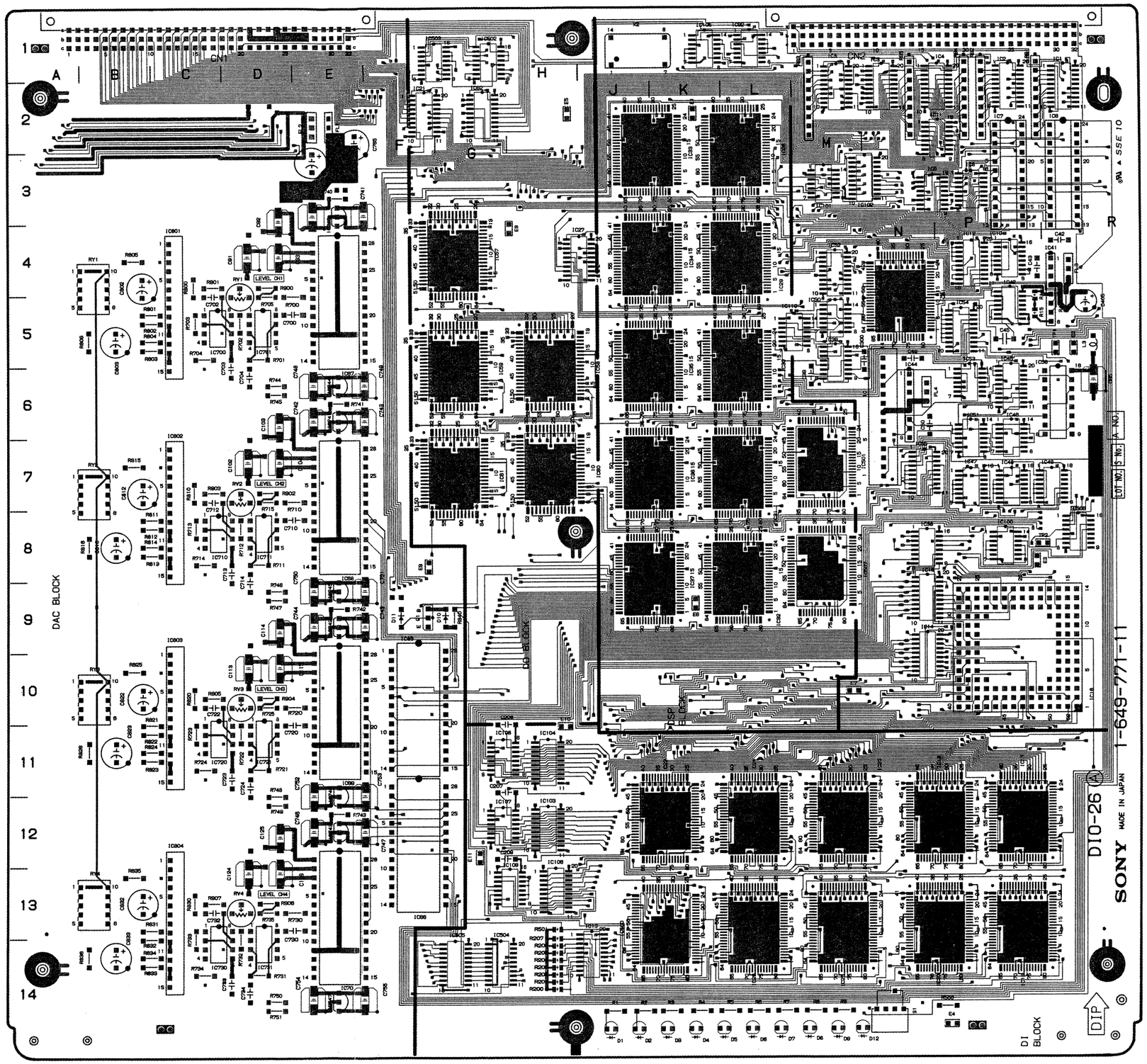

DIO-26
DMX-B4008 PROCESSOR

DIO-26

B (Soldering) Side

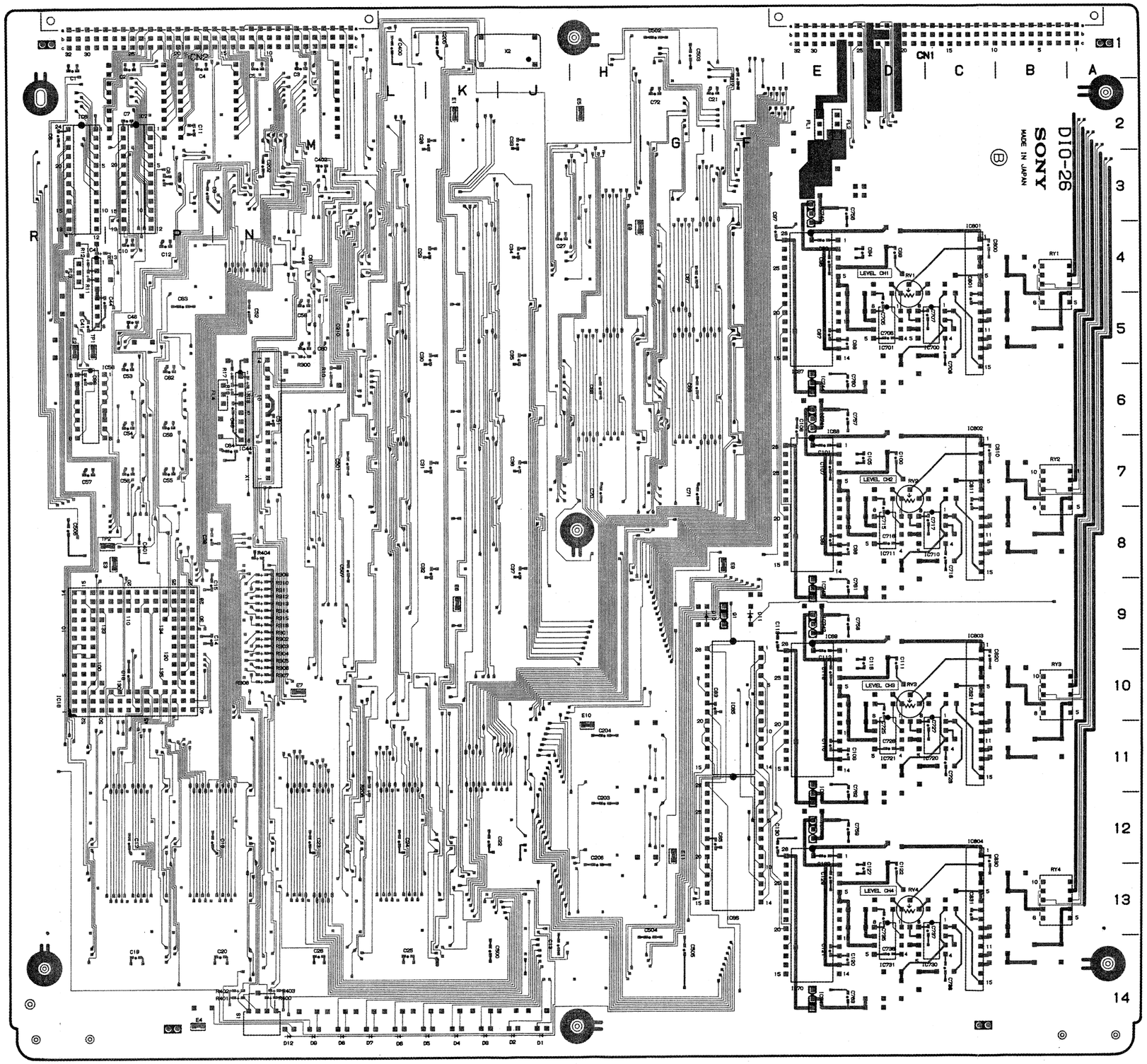

DIO-26 BOARD
1-649-771-11

CN1	C-1	Q1	F-9
CN2	M-1		
		RV1	D-4
D1	J-14	RV2	D-7
D2	J-14	RV3	D-10
D3	K-14	RV4	D-13
D4	K-14		
D5	L-14	RY1	B-4
D6	L-14	RY2	B-7
D7	L-14	RY3	B-10
D8	M-14	RY4	B-13
D9	M-14		
D10	G-9	S1	N-14
D11	F-9		
D12	N-14	TP1	R-5
		TP2	P-8
E1	K-2		
E2	R-5	X1	N-7
E3	R-8	X2	J-1
E4	P-14		
E5	H-2		
E6	K-9		
E7	M-10		
E8	H-14		
E9	F-8		
E10	H-10		
E11	G-12		
IC1	R-1		
IC2	P-1		
IC3	M-1		
IC4	P-1		
IC5	N-1		
IC6	P-2		
IC7	P-2		
IC8	P-3		
IC9	N-3		
IC10	P-4		
IC11	P-2		
IC12	P-4		
IC13	J-13		
IC14	N-8		
IC15	N-8		
IC16	R-10		
IC17	P-11		
IC18	P-11		
IC19	P-14		
IC20	P-14		
IC21	F-2		
IC22	K-1		
IC23	N-11		
IC24	L-1		
IC25	M-14		
IC26	L-14		
IC27	L-4		
IC28	L-2		
IC29	L-4		
IC30	L-5		
IC31	L-8		
IC32	K-9		
IC33	K-2		
IC34	K-4		
IC35	K-5		
IC36	K-7		
IC37	K-8		
IC38	N-8		
IC39	M-5		
IC41	R-4		
IC42	P-4		
IC44	N-5		
IC45	P-5		
IC46	P-6		
IC47	P-7		
IC48	P-7		
IC49	R-7		
IC50	M-5		
IC51	P-6		
IC52	M-4		
IC53	P-5		
IC54	P-5		
IC55	N-7		
IC56	P-5		
IC57	G-4		
IC58	J-5		
IC59	G-6		
IC60	J-7		
IC61	G-7		
IC62	N-2		
IC65	F-9		
IC66	F-13		
IC67	E-6		
IC68	E-6		
IC69	E-11		
IC70	E-14		
IC91	P-5		
IC92	L-1		
IC100	P-8		
IC101	M-3		
IC102	N-3		
IC103	H-12		
IC104	H-11		
IC105	K-1		
IC106	H-12		
IC107	H-12		
IC108	H-11		
IC109	H-12		
IC110	L-5		
IC500	J-13		
IC501	M-7		
IC502	N-1		
IC503	F-1		
IC504	H-13		
IC505	G-13		
IC506	R-8		
IC507	N-8		
IC700	C-5		
IC701	D-5		
IC710	D-8		
IC711	D-8		
IC720	D-11		
IC721	D-11		
IC730	D-14		
IC731	D-14		
IC740	E-3		
IC741	E-6		
IC742	E-9		
IC743	E-12		
IC744	E-6		
IC745	E-9		
IC746	E-11		
IC747	E-14		
IC801	C-4		
IC802	C-6		
IC803	C-9		
IC804	C-12		

3-27

MIX-15
DMX-B4008 PROCESSOR

MIX-15

A (Component) Side

MIX-15 BOARD
1-649-770-11

CN1	C-1	TP14	A-9
CN2	M-1	TP15	D-1
		TP16	E-1
D1	C-13	TP17	C-1
D2	C-13	TP18	C-1
D3	D-13	TP19	C-1
D4	D-13	TP20	C-1
D5	D-13	TP21	D-1
D6	D-13	TP22	B-2
D7	D-13	TP23	A-2
D8	E-13	TP24	A-4
D9	E-13	TP25	A-4
D10	E-13	TP26	A-7
D11	E-13	TP27	A-7
D12	F-13	TP28	A-9
D13	F-13	TP29	B-9
D14	F-13	TP30	F-11
D15	F-13	TP31	G-12
D16	G-13	TP32	F-10
D17	H-13	TP33	F-10
D18	H-13	TP34	F-9
D19	H-13	TP35	F-9
D20	H-13	TP36	F-8
D21	J-13	TP37	F-8
		TP38	H-11
E1	P-12	TP39	J-11
E2	B-12	TP40	H-10
E3	H-8	TP41	J-10
E4	A-8	TP42	H-9
E5	A-2	TP43	J-9
E6	P-4	TP44	J-8
		TP45	J-8
IC1	P-1	TP46	B-8
IC2	N-1	TP47	B-9
IC3	J-1	TP48	D-8
IC4	P-3	TP49	D-8
IC5	N-2	TP50	B-9
IC6	G-1	TP51	C-10
IC7	E-13	TP52	D-8
IC8	N-5	TP53	D-8
IC9	N-4	TP54	B-11
IC10	H-1	TP55	B-11
IC11	G-13	TP56	D-8
IC12	K-1	TP57	C-8
IC13	N-3	TP58	B-12
IC14	M-1	TP59	B-12
IC15	L-1	TP60	C-8
IC16	M-4	TP61	C-8
IC17	M-5		
IC18	A-1	X1	C-2
IC20	D-4		
IC21	C-4		
IC22	D-3		
IC23	D-5		
IC24	C-5		
IC25	D-2		
IC26	M-2		
IC27	B-1		
IC28	B-3		
IC29	B-5		
IC30	C-3		
IC31	D-1		
IC32	A-4		
IC33	B-3		
IC34	A-7		
IC35	B-6		
IC36	B-9		
IC37	B-9		
IC38	BP-11		
IC39	B-11		
IC40	B-8		
IC41	B-10		
IC42	L-5		
IC43	K-5		
IC44	L-4		
IC45	K-4		
IC46	T-12		
IC47	F-11		
IC48	F-10		
IC49	F-9		
IC50	F-8		
IC51	L-8		
IC52	J-12		
IC53	J-11		
IC54	J-10		
IC55	J-9		
IC56	F-7		
IC57	F-5		
IC58	J-7		
IC59	J-5		
IC60	M-3		
IC61	J-3		
IC62	F-1		
IC63	E-1		
IC64	C-7		
IC65	C-6		
IC66	D-6		
IC67	M-3		
IC68	D-9		
IC69	D-10		
IC70	D-11		
IC71	D-12		
IC72	K-12		
IC73	G-2		
IC74	L-12		
IC75	N-12		
IC80	E-2		
IC81	F-2		
IC83	M-6		
IC84	P-6		
IC100	C-1		
IC101	H-1		
IC102	F-1		
IC103	E-1		
IC104	P-9		
IC105	M-9		
IC106	P-8		
IC107	M-8		
IC108	N-8		
IC109	N-9		
S1	K-13		
S2	M-13		
TP1	K-2		
TP2	J-2		
TP3	J-2		
TP4	C-1		
TP5	C-6		
TP6	C-2		
TP7	C-1		
TP8	B-2		
TP9	B-4		
TP10	A-4		
TP11	B-7		
TP12	B-7		
TP13	B-9		

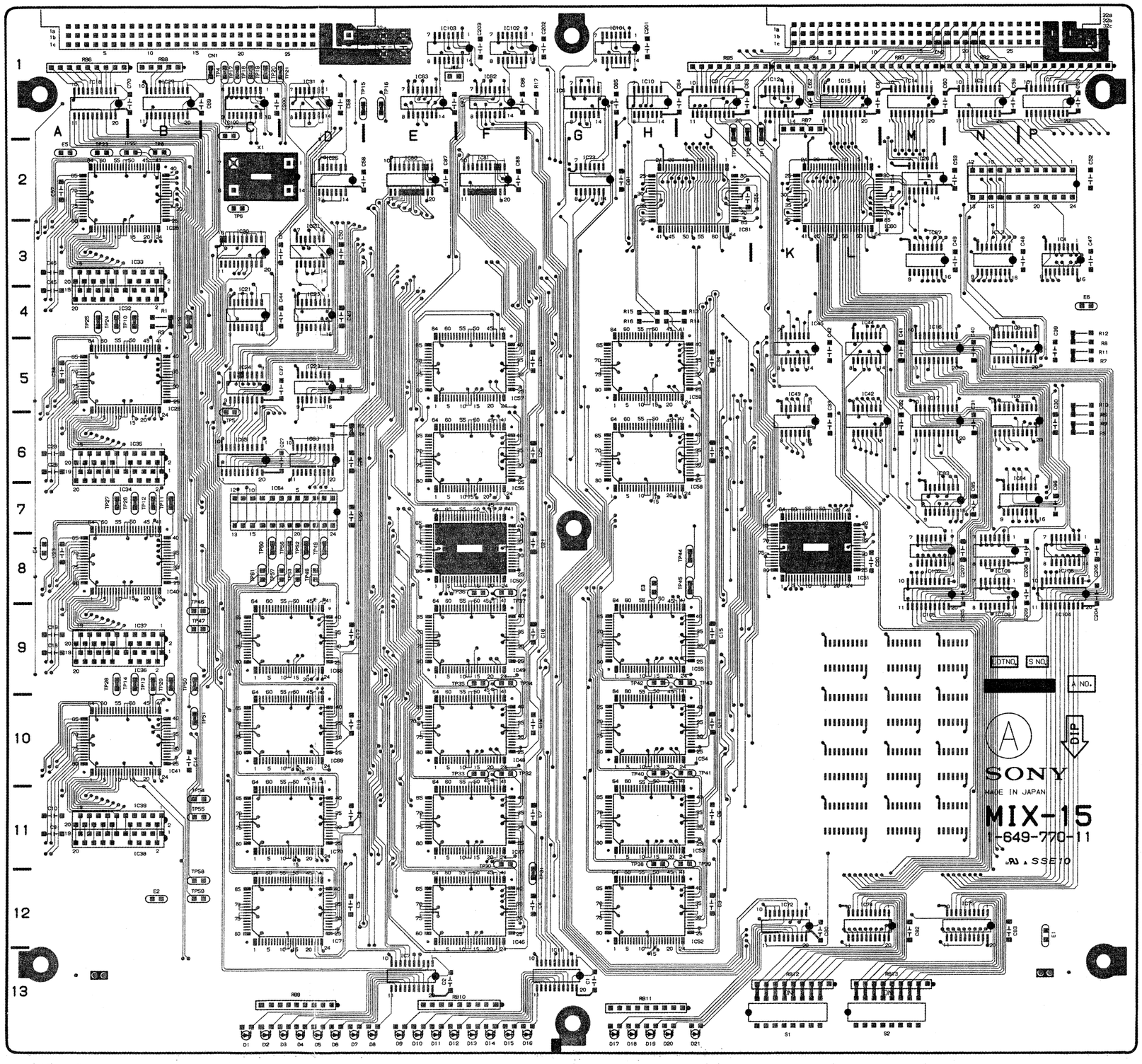

MIX-15
DMX-B4008 PROCESSOR

MIX-15

B (Soldering) Side

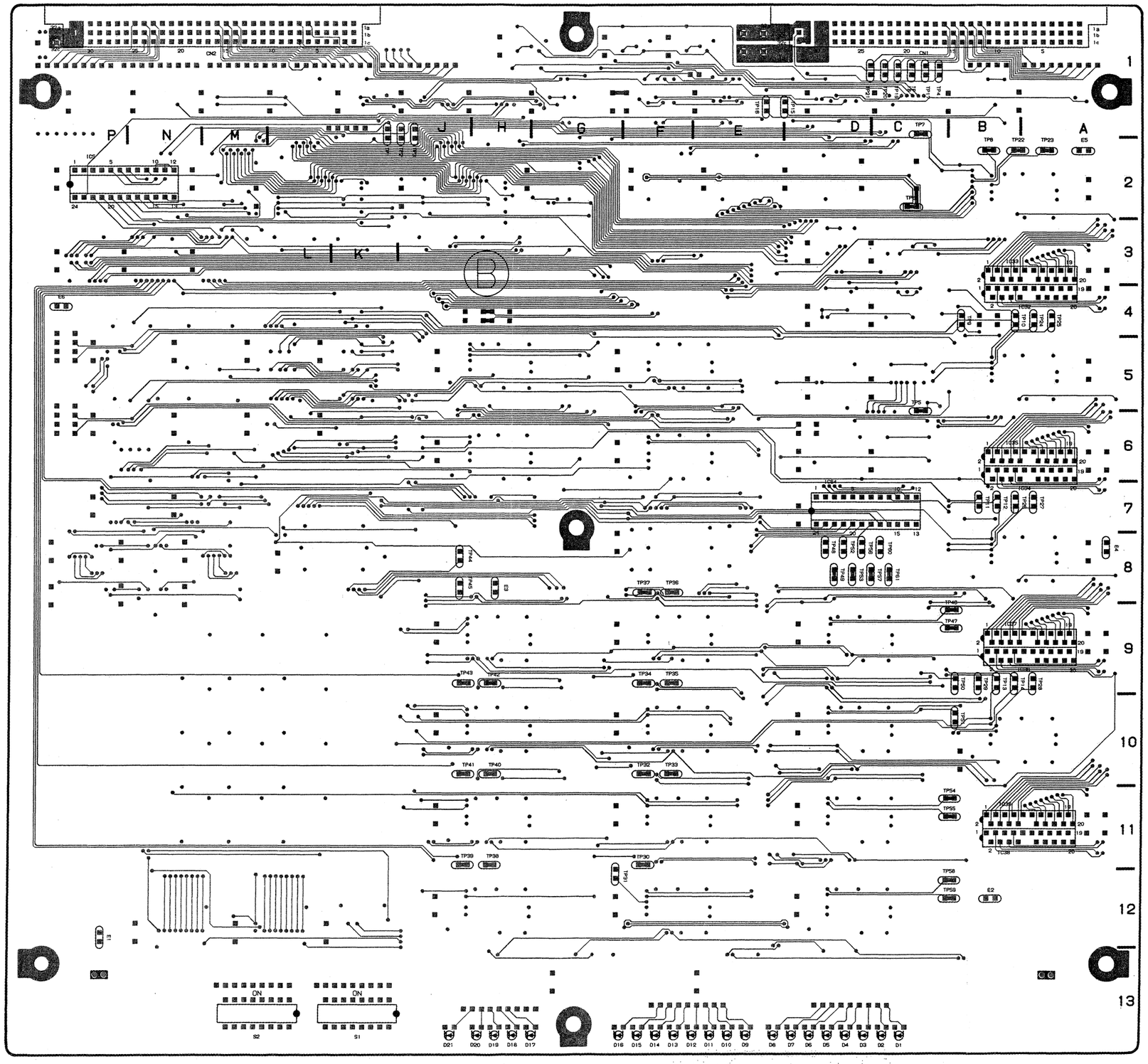

MIX-15 BOARD
1-649-770-11

CN1	C-1	TP14	A-9
CN2	M-1	TP15	D-1
		TP16	E-1
D1	C-13	TP17	C-1
D2	C-13	TP18	C-1
D3	D-13	TP19	C-1
D4	D-13	TP20	C-1
D5	D-13	TP21	D-1
D6	D-13	TP22	B-2
D7	D-13	TP23	A-2
D8	E-13	TP24	A-4
D9	E-13	TP25	A-4
D10	E-13	TP26	A-7
D11	E-13	TP27	A-7
D12	F-13	TP28	A-9
D13	F-13	TP29	B-9
D14	F-13	TP30	F-11
D15	F-13	TP31	G-12
D16	G-13	TP32	F-10
D17	H-13	TP33	F-10
D18	H-13	TP34	F-9
D19	H-13	TP35	F-9
D20	H-13	TP36	F-8
D21	J-13	TP37	F-8
		TP38	H-11
E1	P-12	TP39	J-11
E2	B-12	TP40	H-10
E3	H-8	TP41	J-10
E4	A-8	TP42	H-9
E5	A-2	TP43	J-9
E6	P-4	TP44	J-8
		TP45	J-8
IC1	P-1	TP46	B-8
IC2	N-1	TP47	B-9
IC3	J-1	TP48	D-8
IC4	P-3	TP49	D-8
IC5	N-2	TP50	B-9
IC6	G-1	TP51	C-10
IC7	E-13	TP52	D-8
IC8	N-5	TP53	D-8
IC9	N-4	TP54	B-11
IC10	H-1	TP55	B-11
IC11	G-13	TP56	D-8
IC12	K-1	TP57	C-8
IC13	N-3	TP58	B-12
IC14	M-1	TP59	B-12
IC15	L-1	TP60	C-8
IC16	M-4	TP61	C-8
IC17	M-5		
IC18	A-1	X1	C-2
IC20	D-4		
IC21	C-4		
IC22	D-3		
IC23	D-5		
IC24	C-5		
IC25	D-2		
IC26	M-2		
IC27	B-1		
IC28	B-3		
IC29	B-5		
IC30	C-3		
IC31	D-1		
IC32	A-4		
IC33	B-3		
IC34	A-7		
IC35	B-6		
IC36	B-9		
IC37	B-9		
IC38	B-11		
IC39	B-11		
IC40	B-8		
IC41	B-10		
IC42	L-5		
IC43	K-5		
IC44	L-4		
IC45	K-4		
IC46	F-12		
IC47	F-11		
IC48	F-10		
IC49	F-9		
IC50	F-8		
IC51	L-8		
IC52	J-12		
IC53	J-11		
IC54	J-10		
IC55	J-9		
IC56	F-7		
IC57	F-5		
IC58	J-7		
IC59	J-5		
IC60	M-3		
IC61	J-3		
IC62	F-1		
IC63	F-1		
IC64	C-7		
IC65	C-6		
IC66	D-6		
IC67	M-3		
IC68	D-9		
IC69	D-10		
IC70	D-11		
IC71	D-12		
IC72	K-12		
IC73	G-2		
IC74	L-12		
IC75	N-12		
IC80	E-2		
IC81	F-2		
IC83	M-6		
IC84	P-6		
IC100	C-1		
IC101	H-1		
IC102	F-1		
IC103	E-1		
IC104	P-9		
IC105	M-9		
IC106	P-8		
IC107	M-8		
IC108	N-8		
IC109	N-9		
S1	K-13		
S2	M-13		
TP1	K-2		
TP2	J-2		
TP3	J-2		
TP4	C-1		
TP5	C-6		
TP6	C-2		
TP7	C-1		
TP8	B-2		
TP9	B-4		
TP10	A-4		
TP11	B-7		
TP12	B-7		
TP13	B-9		

3-29

MB-481
DMX-B4008 PROCESSOR

MB-481

MB-481 BOARD
1-649-773-11

CN5	E-2
CN6	E-3
CN7	E-6
CN8	E-8
CN9	E-10
CN1A	*H-2
CN1B	*D-3
CN10	G-1
CN11	I-1
CN12	D-2
CN3A	*H-6
CN3B	*B-7
CN4A	*H-9
CN4B	*B-9

* : B (Soldering) Side mount

A (Component) Side

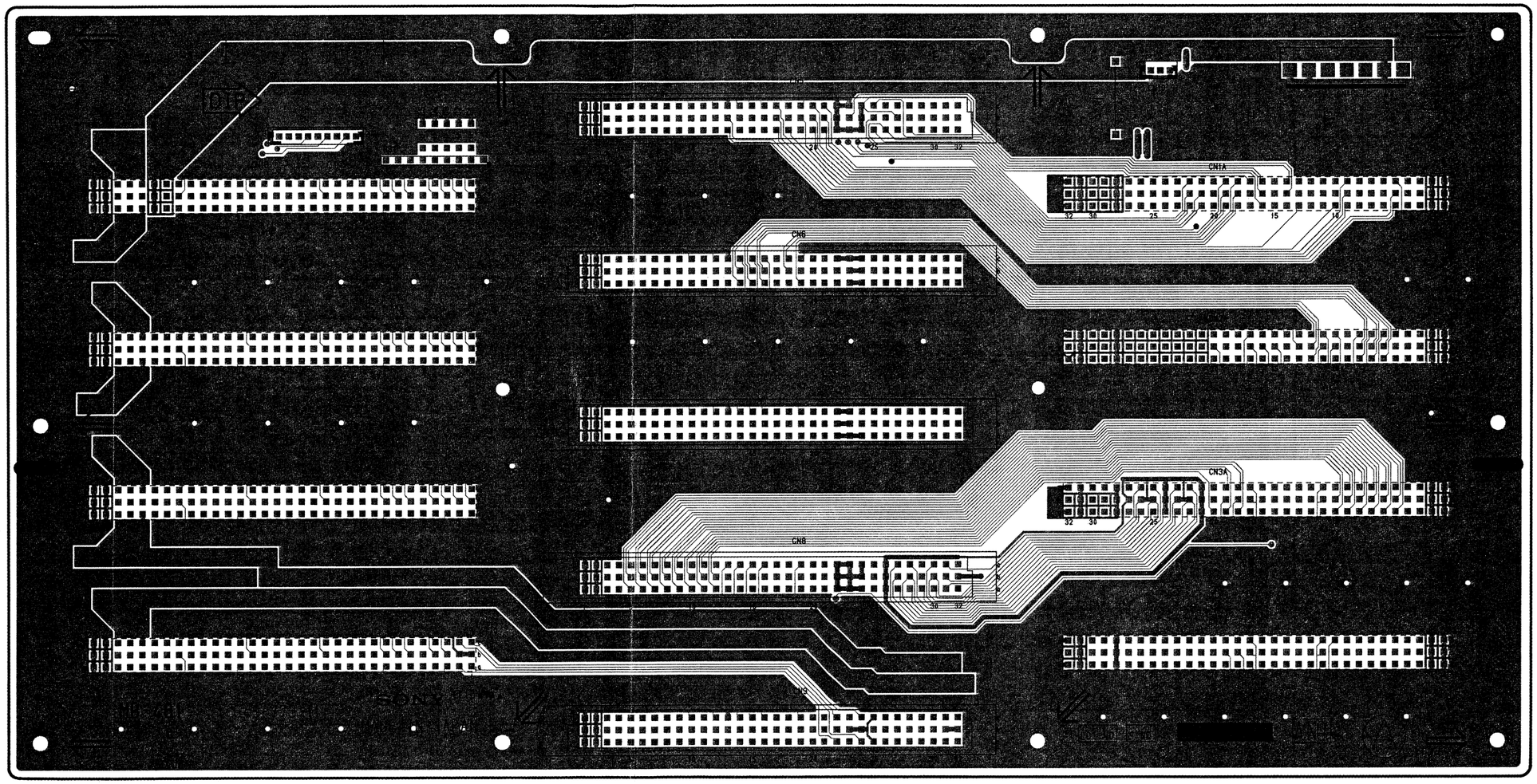

1-649-773-11

3-30

MB-481
DMX-B4008 PROCESSOR

MB-481

B (Soldering) Side

MB-481 BOARD
1-649-773-11

CN5	F-2
CN6	F-3
CN7	F-8
CN8	F-9
CN9	F-10
CN1A	*I-2
CN1B	*B-3
CN10	G-1
CN11	J-1
CN12	B-2
CN2A	*I-5
CN3B	*B-7
CN4A	*I-9
CN4B	*B-9

* : B (Soldering) Side mount

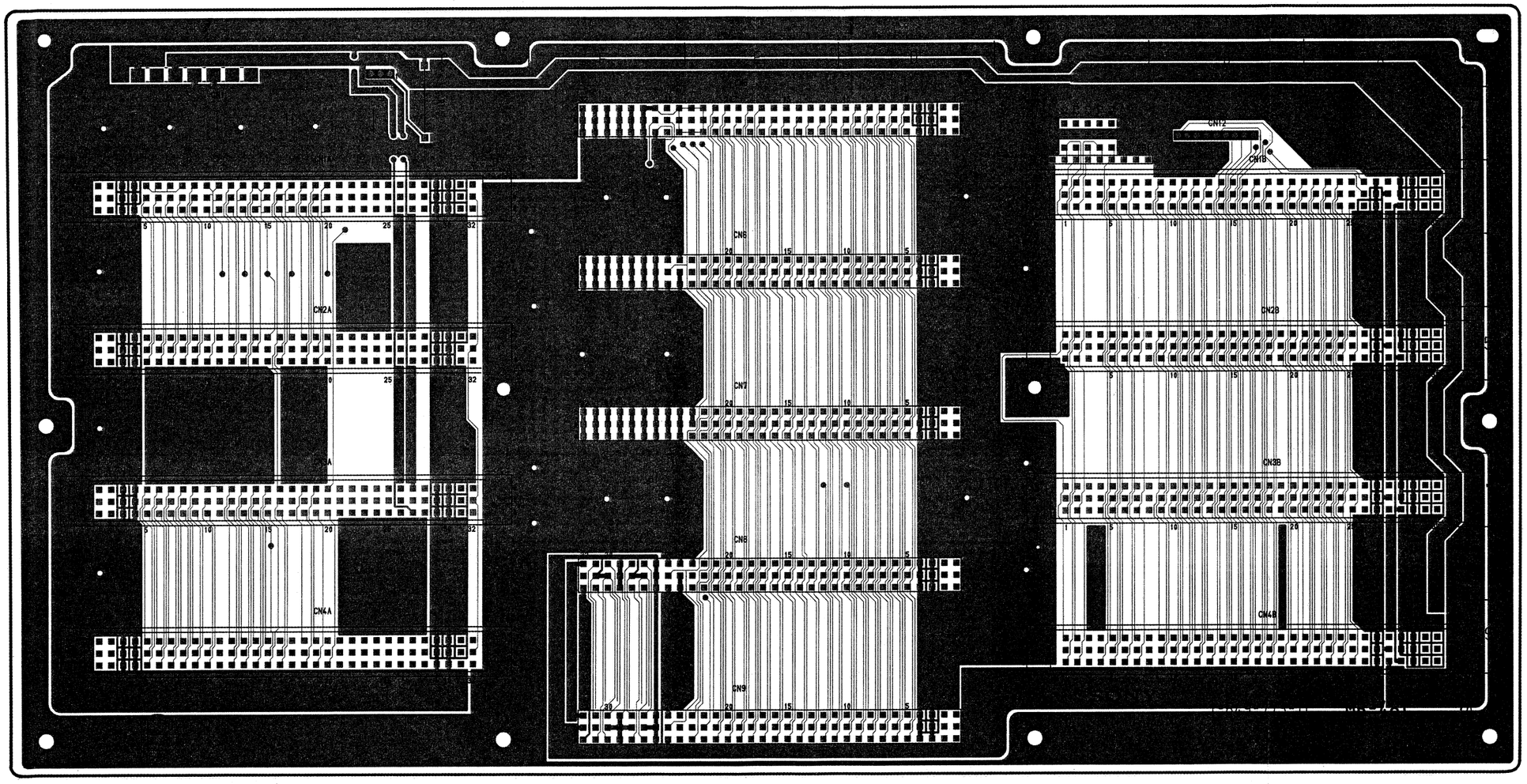

1-649-773-11

3-31

CN-833
DMX-B4008 PROCESSOR

CN-833

CN-833 BOARD
1-649-756-11

CN1	G-6
CN2	N-2
CN3	M-2
CN6	H-1
CN7	H-1
CN8	E-1
CN9	E-1
CN12	E-1
D1	M-4
D2	M-5
D3	M-4
D4	M-5
D13	N-5
D14	N-5
D15	N-4
D16	N-4
IC1	L-5
IC2	J-5
IC3	M-5

A (Component) Side

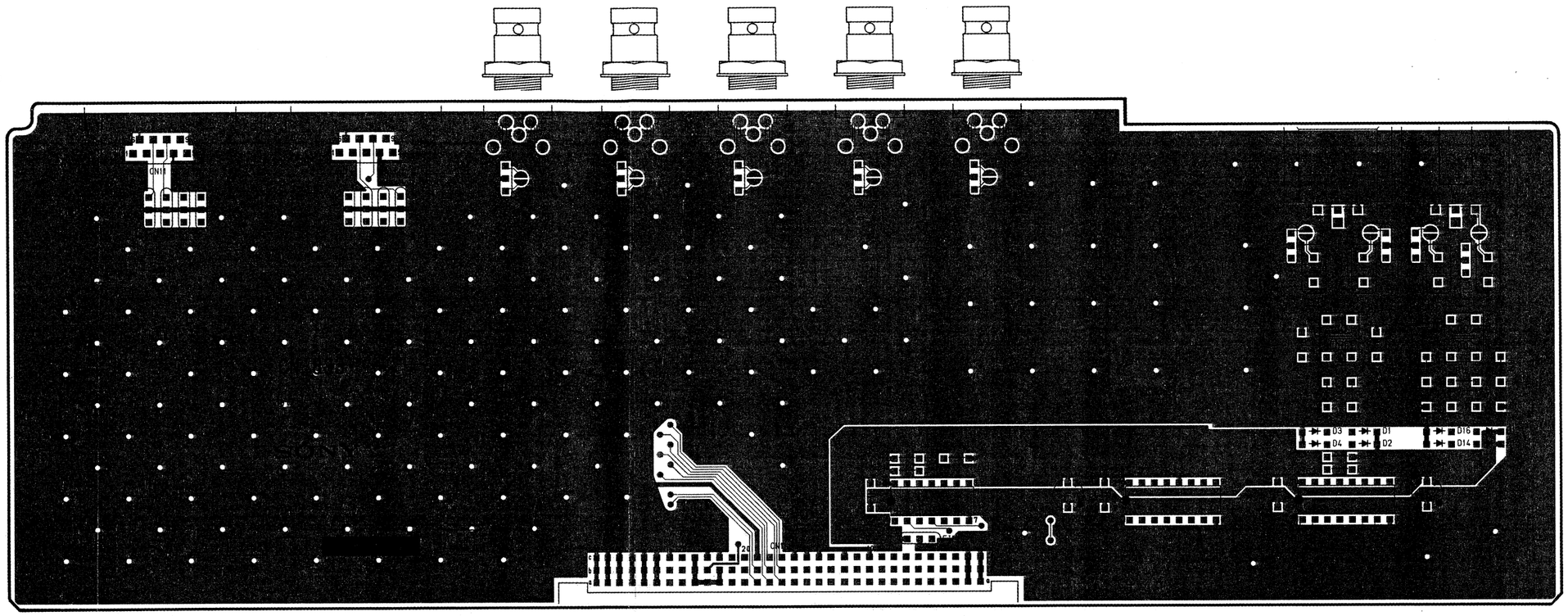

1-649-756-11

B (Soldering) Side

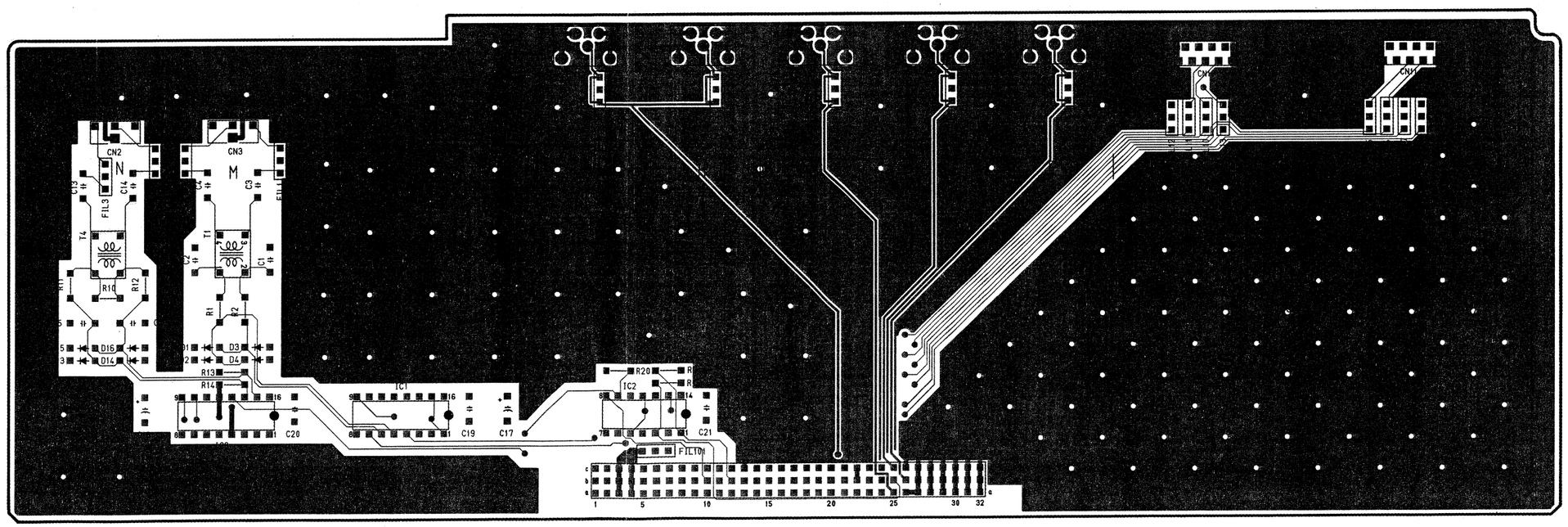

1-649-756-11

3-32

CN-834 DMX-B4008 PROCESSOR

CN-834

A (Component) Side

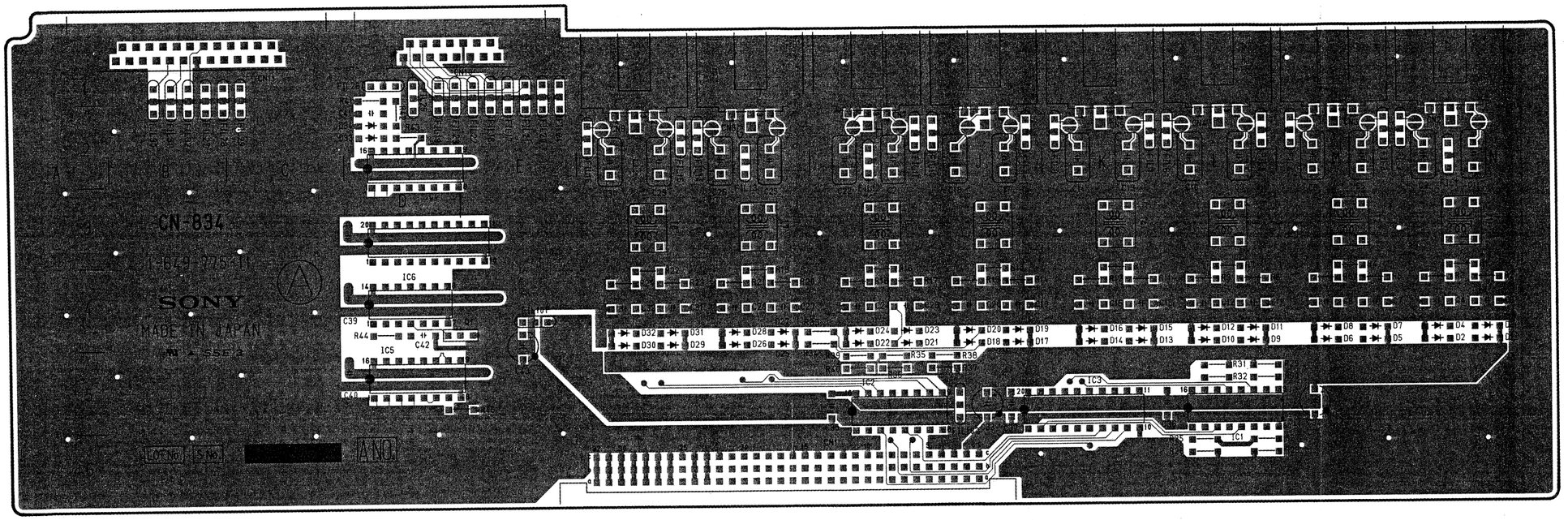

1-649-775-11

B (Soldering) Side

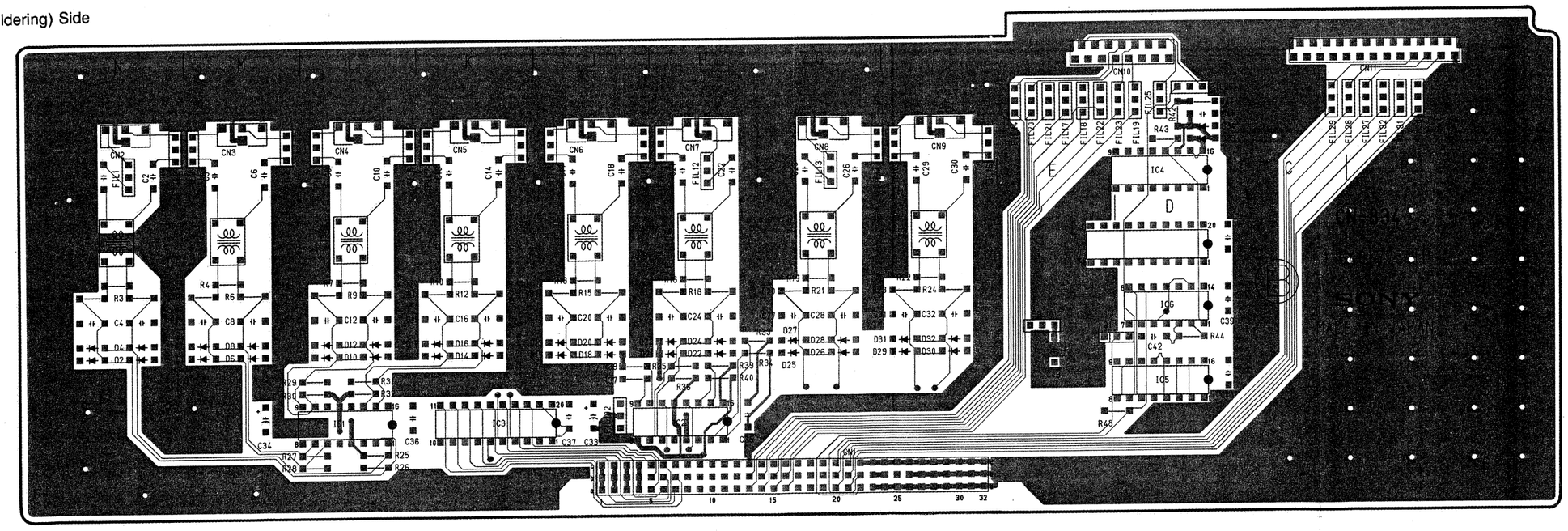

1-649-775-11

CN-834 BOARD
1-649-775-11

CN1	H-6
CN2	N-2
CN3	M-2
CN4	L-2
CN5	K-2
CN6	J-2
CN7	H-2
CN8	G-2
CN9	F-2
CN10	E-1
CN11	C-1
D1	N-5
D2	N-5
D3	N-4
D4	N-4
D5	N-5
D6	M-5
D7	N-4
D8	M-4
D9	L-5
D10	L-5
D11	L-4
D12	L-4
D13	L-5
D14	K-5
D15	K-4
D16	K-4
D17	J-5
D18	J-5
D19	J-4
D20	J-4
D21	I-5
D22	I-5
D23	I-4
D24	H-4
D25	G-5
D26	G-5
D27	G-4
D28	G-4
D29	G-5
D30	F-5
D31	F-4
D32	F-4
D33	D-2
D34	D-2
IC1	L-6
IC2	H-5
IC3	K-5
IC4	D-3
IC5	D-5
IC6	D-4
Q1	E-4

3-33

CN-835 DMX-B4008 PROCESSOR

CN-835

CN-835 BOARD
1-649-777-11

CN1	H-6
CN2	N-2
CN3	M-2
CN4	L-2
CN5	K-2
CN6	J-2
CN7	H-2
CN8	G-2
CN9	F-2
D1	N-5
D2	N-5
D3	N-4
D4	N-4
D5	M-5
D6	M-5
D7	M-4
D8	M-4
D9	L-5
D10	L-5
D11	L-4
D12	L-4
D13	K-5
D14	K-5
D15	K-4
D16	K-4
D17	J-5
D18	J-5
D19	J-4
D20	J-4
D21	H-5
D22	H-5
D23	H-4
D24	H-4
D25	G-5
D26	G-5
D27	G-4
D28	G-4
D29	F-5
D30	F-5
D31	F-4
D32	F-4
IC1	L-6
IC2	H-6
IC3	K-6

A (Component) Side

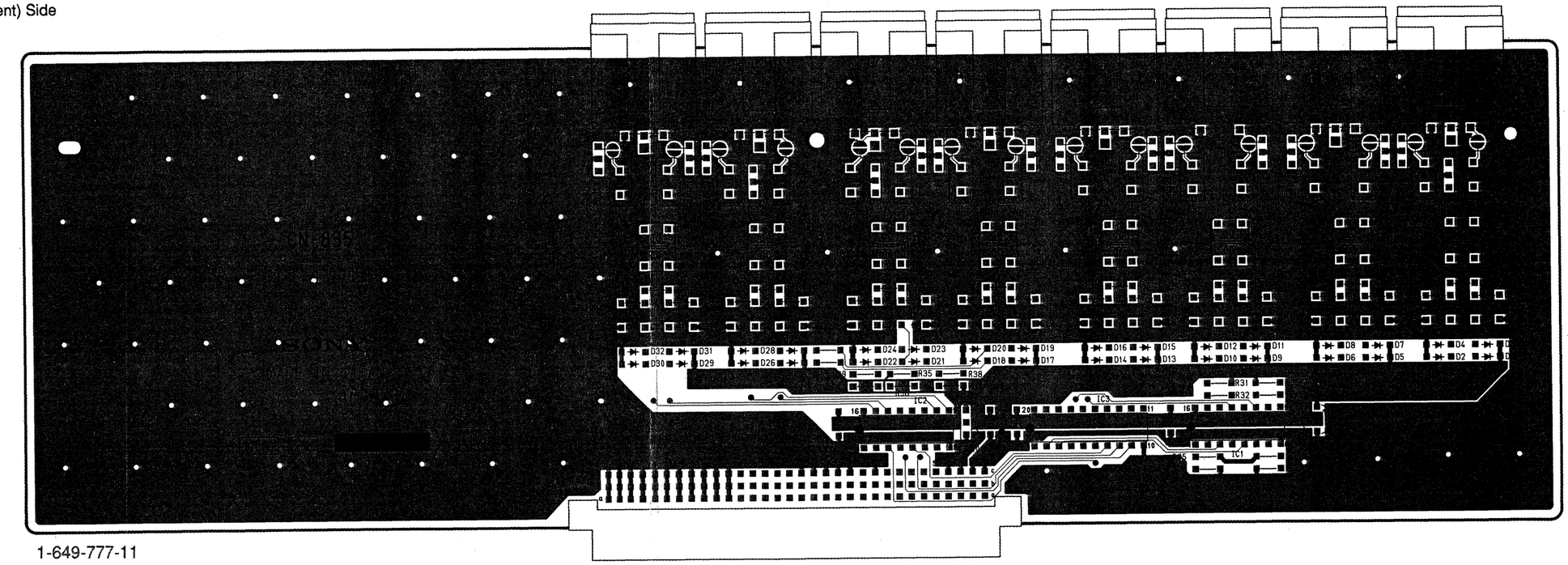

1-649-777-11

B (Soldering) Side

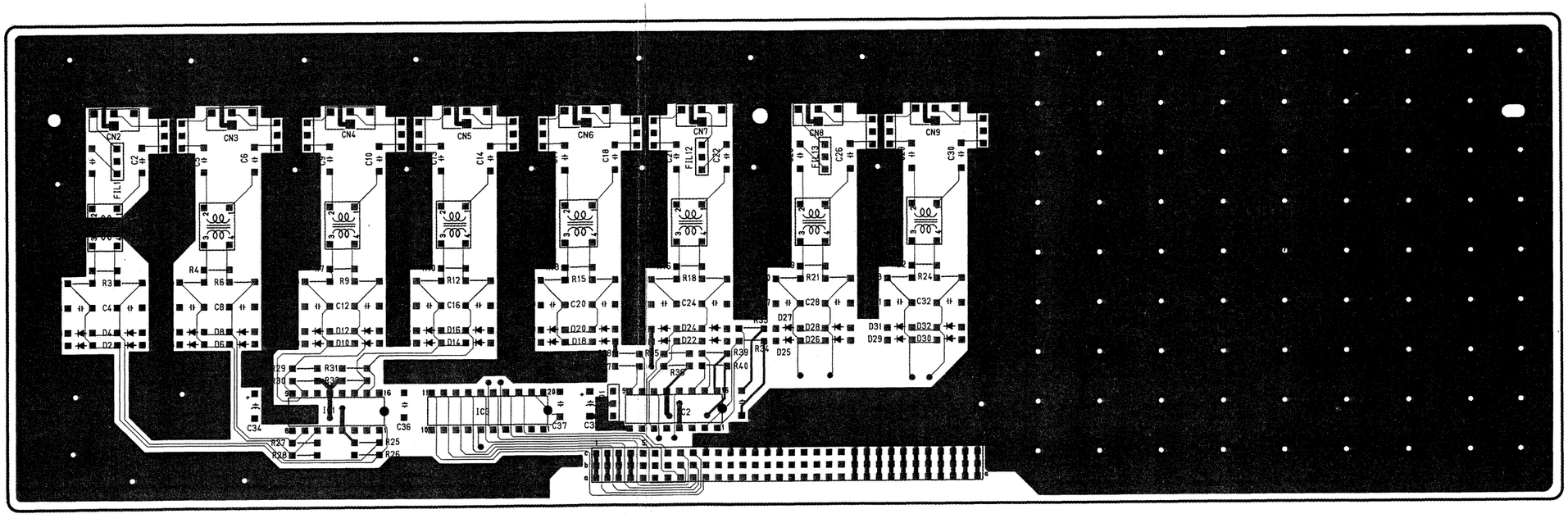

1-649-777-11

3-34

CN-836 DMX-B4008 PROCESSOR

CN-836

A (Component) Side

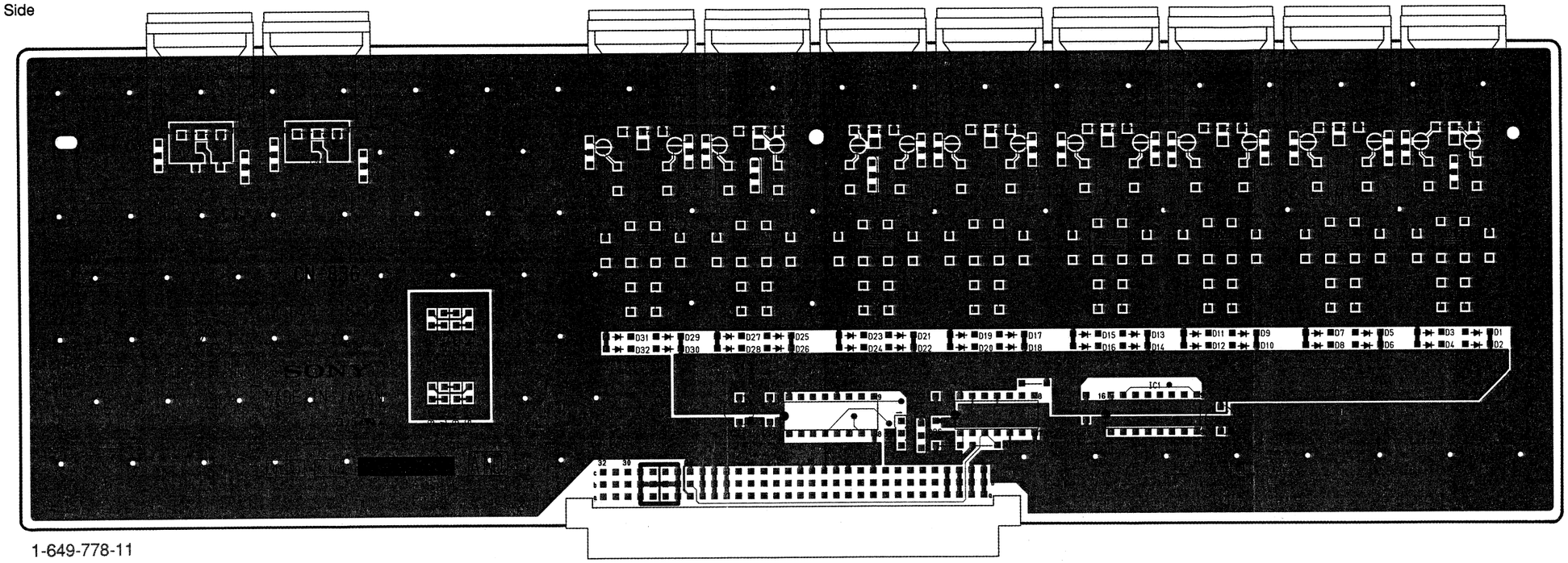

1-649-778-11

CN-836 BOARD
1-649-778-11

CN1	G-6
CN2	N-5
CN3	M-5
CN4	L-5
CN5	K-5
CN6	J-5
CN7	I-5
CN8	G-5
CN9	F-5
CN10	H-5
D1	N-4
D2	N-4
D3	N-4
D4	N-4
D5	M-4
D6	M-4
D7	M-4
D8	M-4
D9	L-4
D10	L-4
D11	L-4
D12	L-4
D13	K-4
D14	K-4
D15	K-4
D16	K-4
D17	J-4
D18	J-4
D19	J-4
D20	J-4
D21	H-4
D22	H-4
D23	H-4
D24	H-4
D25	G-4
D26	G-4
D27	G-4
D28	G-4
D29	F-4
D30	F-4
D31	F-4
D32	F-4
IC1	K-5
IC2	G-5
IC3	J-5

B (Soldering) Side

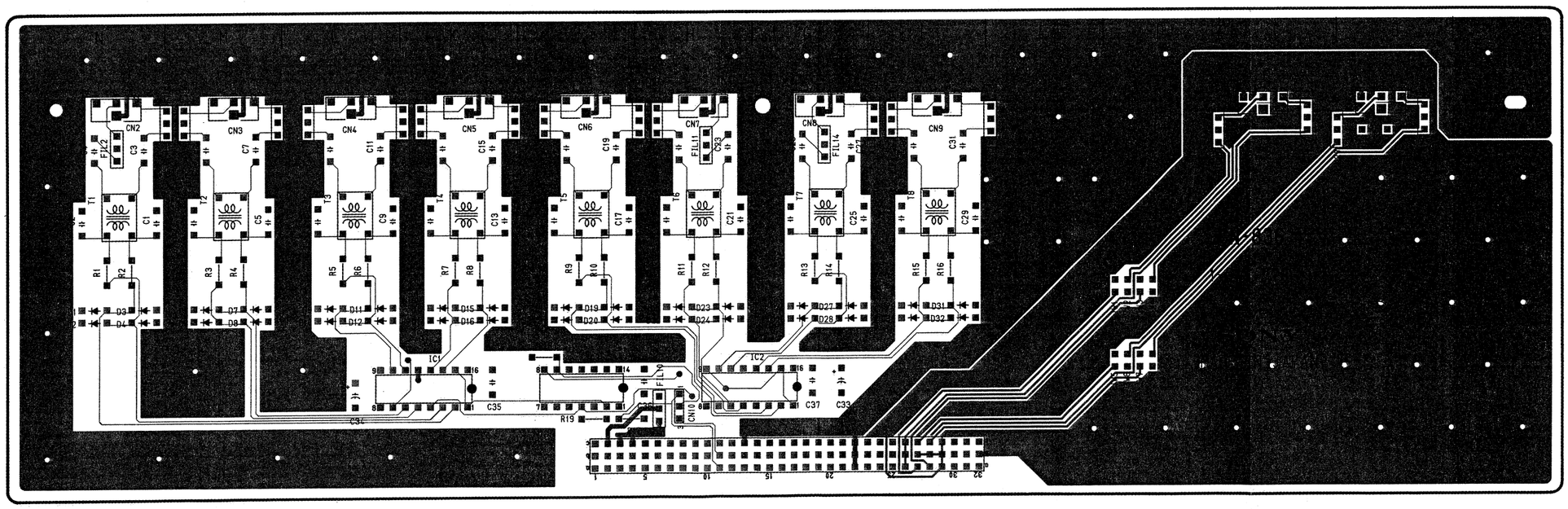

1-649-778-11

3-35

CN-837 DMX-B4008 PROCESSOR

CN-837

CN-837 BOARD
1-649-776-11

CN1	G-5
CN2	J-1
CN3	M-1
CN4	L-1
CN5	B-1
D1	J-4
D2	J-3
D3	J-3
D4	J-3
D5	M-4
D6	M-3
D7	M-4
D8	M-3
D9	J-4
D10	J-4
D11	K-4
D12	K-3
IC1	K-4
IC2	M-5
IC3	J-5
IC4	J-4
IC5	H-3
IC6	H-3
IC7	F-3
IC8	F-3
IC9	D-2
IC10	D-2
IC11	F-1
IC12	D-2
IC13	K-3
IC14	F-4
RV1	G-1
RV2	G-1

A (Component) Side

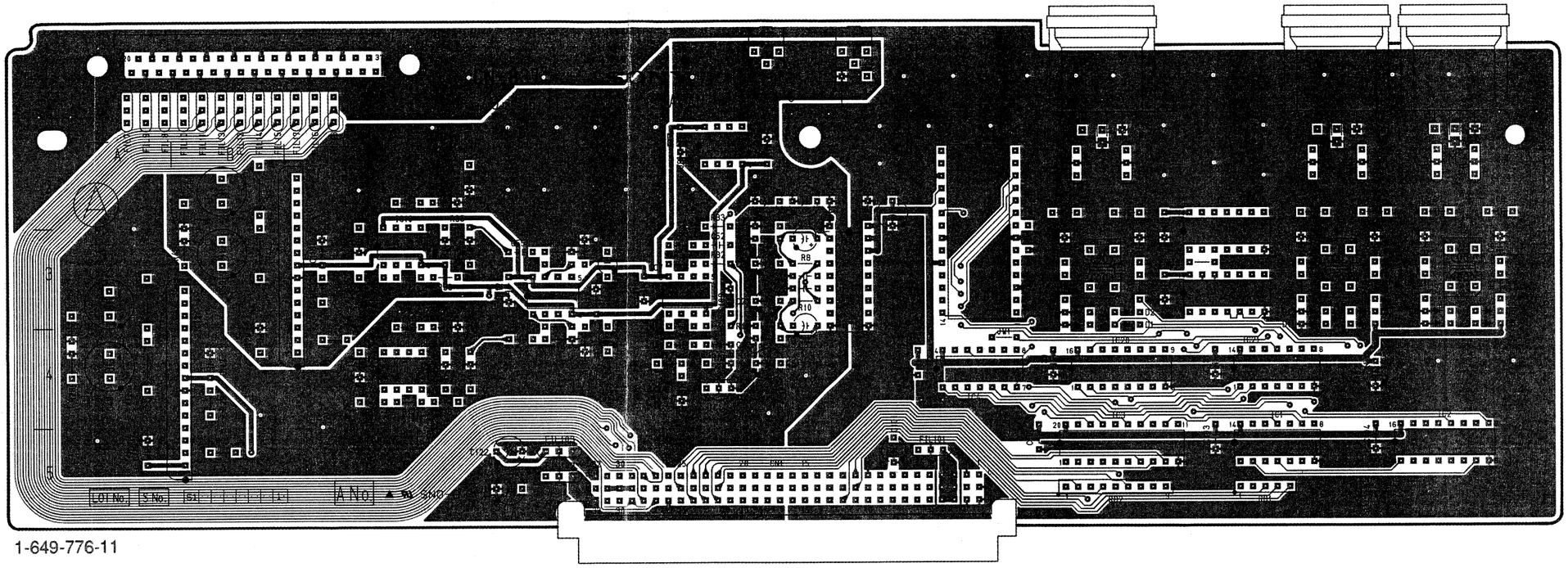

1-649-776-11

B (Soldering) Side

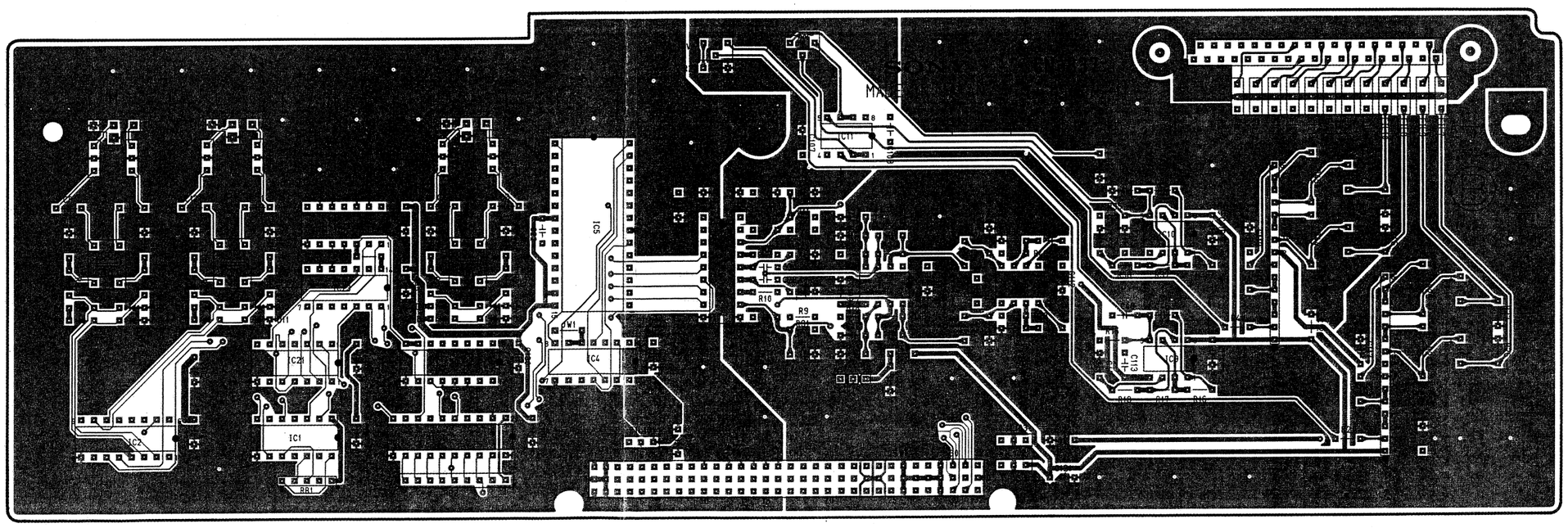

1-649-776-11

3-36

PS-313

A (Component) Side

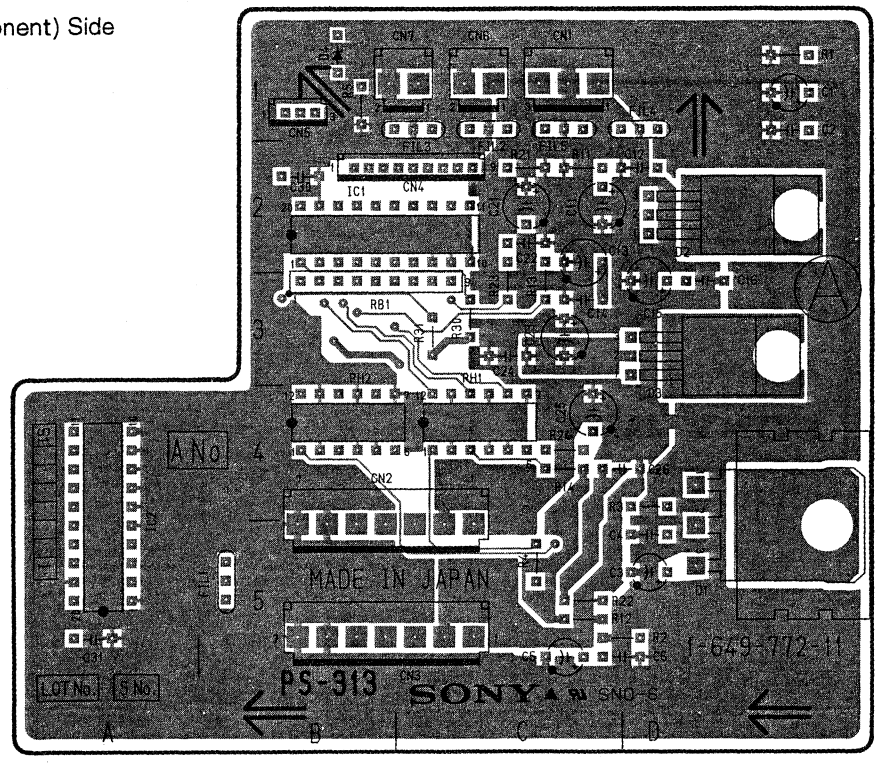

1-649-772-11

PS-313 BOARD
1-649-772-11

CN1	C-1
CN2	B-4
CN3	C-5
CN4	C-2
CN5	B-1
CN6	C-1
D1	D-5
D2	D-2
D3	D-4
D4	B-1
IC1	B-2
IC2	A-5
PH1	C-3
PH2	B-3

B (Soldering) Side

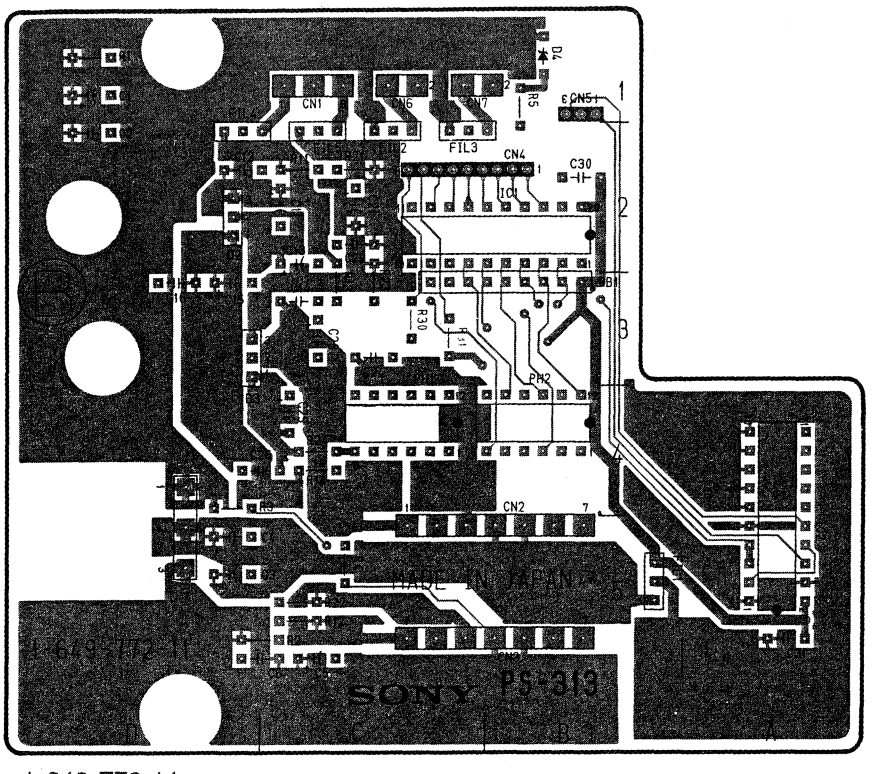

1-649-772-11

DP-131

A (Component) Side

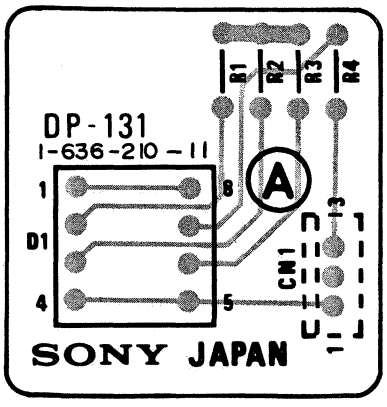

1-636-210-11

CPU-144
DMX-B4016 PROCESSOR

3-3. DMX-B4016 PROCESSOR

CPU-144

A (Component) Sid

CPU-144 BOARD
1-650-113-11

CN1	C-1
CN2	R-1
CN3	M-20
CN4	R-20
DB101	H-1
DB102	H-2
D101	K-20
D102	K-20
D103	H-20
D104	H-20
D105	H-20
D106	J-20
D107	G-20
D108	H-20
D109	H-20
D110	H-20
D111	G-1
D112	H-1
D151	M-14
D201	K-20
D202	K-20
D203	K-20
D204	J-20
D205	J-20
D206	J-20
D207	J-20
D208	J-20
D301	S-1
D302	R-3
D303	R-3
D304	S-5
D305	R-6
D306	R-6
D307	R-7
D308	R-8
D309	S-7
D310	S-7
D451	K-20
D501	H-14
D502	H-14
D503	G-14
D504	H-14
D505	H-14
D506	G-14
D507	G-15
D508	H-15
D961	A-17
D962	A-18
D963	A-18
D964	A-19
D965	B-17
D966	B-17
D967	B-18
D968	B-18
D969	B-20
D981	A-14
D982	A-14
D983	A-15
D984	A-16
D985	B-14
D986	B-14
D987	B-15
D988	B-15
D989	B-16
E1	K-1
E2	F-1
E3	B-5
E4	E-4
E5	E-11
E6	H-10
E7	N-10
E8	S-13
E9	K-14
E10	T-19
E301	T-1
E302	T-1
E303	T-3
E304	T-6
E305	R-7
E306	T-10
E800	A-6
E801	D-20
E821	D-17
E841	B-5
E861	B-2
E881	C-9
E900	B-16
E901	B-7
E921	D-15
E941	B-12
IC1	E-20
IC2	D-20
IC3	E-18
IC4	D-18
IC5	D-5
IC6	C-5
IC7	D-3
IC8	C-3
IC9	A-3
IC10	A-5
IC51	D-10
IC52	C-10
IC53	D-8
IC54	C-8
IC55	E-16
IC56	D-16
IC57	D-13
IC58	B-13
IC100	J-9
IC101	K-6
IC102	K-6
IC103	J-1
IC104	M-10
IC105	M-13
IC106	N-13
IC107	N-12
IC108	N-15
IC109	M-14
IC110	N-11
IC111	N-10
IC112	*N-9
IC114	N-9
IC115	N-9
IC116	K-9
IC117	K-7
IC118	G-10
IC119	F-3
IC120	H-11
IC151	R-17
IC152	P-16
IC155	N-16
IC156	M-16
IC157	L-16
IC158	K-17
IC159	K-17
IC160	K-17
IC161	J-17
IC162	J-17
IC163	L-14
IC201	N-6
IC202	P-6
IC203	N-7
IC204	N-6
IC205	N-7
IC206	N-8
IC207	N-8
IC209	P-7
IC211	N-1
IC212	N-2
IC213	N-3
IC214	L-1
IC215	M-2
IC216	M-3
IC217	N-2
IC218	N-3
IC219	N-3
IC220	N-5
IC221	N-5
IC222	N-4
IC223	P-4
IC224	P-5
IC225	N-2
IC226	P-3
IC227	N-4
IC301	R-2
IC302	R-3
IC303	R-4
IC304	S-3
IC305	S-5
IC306	R-7
IC307	R-5
IC308	R-5
IC309	R-8
IC310	T-8
IC311	T-7
IC312	S-12
IC313	S-10
IC314	R-9
IC315	*S-9
IC316	R-9
IC317	*S-10
IC318	*S-11
IC319	T-6
IC320	S-12
IC321	T-4
IC322	T-2
IC401	J-10
IC402	K-12
IC403	*J-10
IC404	H-13
IC405	H-11
IC407	*H-9
IC408	H-13
IC409	K-13
IC410	*G-8
IC411	*H-8
IC412	*H-8
IC413	*H-9
IC414	*H-4
IC415	K-11
IC416	J-12
IC417	K-13
IC418	R-1
IC419	*G-4
IC420	*H-4
IC451	*N-20
IC452	P-20
IC453	P-19
IC454	*P-19
IC455	*N-20
IC456	M-20
IC457	R-20
IC458	R-19
IC459	T-20
IC460	R-20
IC461	*S-19
IC462	*J-17
IC463	T-19
IC467	*K-17
IC468	S-17
IC470	*P-20
IC501	J-14
IC502	*K-16
IC503	*J-15
IC504	J-15
IC505	H-16
IC506	H-17
IC507	*H-16
IC508	*H-17
IC509	*H-15
IC510	*H-16
IC511	*H-18
IC512	H-18
IC513	H-18
IC514	*J-16
IC515	G-16
IC516	G-17
IC517	*H-16
IC518	*H-17
IC601	F-4
IC602	H-4
IC603	H-6
IC604	J-7
IC605	H-8
IC606	J-8
IC607	F-1
IC608	G-1
IC609	*J-6
IC610	*J-5
IC611	*G-6
IC612	*G-5
IC613	*H-6
IC614	*H-5
IC615	*H-7
IC616	*G-7
IC617	F-2
IC701	E-12
IC702	F-4
IC703	F-16
IC704	E-16
IC705	D-4
IC706	E-1
IC707	E-6
IC708	F-9
IC709	D-8
IC710	D-6
IC711	F-14
IC712	D-11
IC801	E-18
IC802	E-19
IC803	D-19
IC821	E-16
IC822	E-17
IC823	D-17
IC841	C-3
IC842	C-4
IC843	B-4
IC861	C-1
IC862	C-1
IC863	B-1
IC881	C-8
IC882	C-9
IC883	B-9
IC901	C-6
IC902	C-6
IC903	B-6
IC921	D-13
IC922	E-14
IC923	D-14
IC941	C-11
IC942	C-11
IC943	B-11
IC961	A-18
IC981	A-15
Q301	S-1
Q302	R-7
Q303	R-5
Q304	T-5
Q305	R-6
Q306	T-6
Q307	T-5
Q308	T-4
Q961	A-17
Q962	A-18
Q963	A-19
Q964	A-20
Q965	G-18
Q981	A-14
Q982	A-15
Q983	A-15
Q984	A-16
Q985	G-19
RV301	T-5
RV302	T-5
RV303	T-4
RV801	F-20
RV802	E-20
RV821	E-20
RV822	D-20
RV841	B-20
RV861	B-20
RV881	C-20
RV901	D-20
RV921	D-20
RV941	D-20
RY962	B-20
RY981	B-17
S101	M-20
S102	M-20
S103	L-19
S501	K-20
S502	H-20
S503	K-19
S504	G-19
TP101	L-4
TP102	K-4
TP103	K-4
TP104	L-4
TP105	L-4
TP106	J-5
TP107	J-4
TP108	J-3
TP109	J-4
TP110	K-4
TP111	K-4
TP112	K-4
TP113	K-9
TP114	K-7
TP115	K-10
TP116	K-8
TP117	H-11
TP118	L-8
TP119	K-4
TP120	K-4
TP121	L-4
TP122	M-4
TP123	K-4
TP124	M-4
TP125	K-4
TP126	M-11
TP127	M-11
TP128	M-11
TP129	M-11
TP130	K-9
TP301	S-3
TP302	T-11
TP303	S-6
TP401	G-4
TP402	H-3
TP403	H-3
TP501	J-14
TP502	J-14
TP503	H-14
TP504	J-14
TP505	H-14
TP506	H-14
TP601	H-5
TP602	H-5
TP603	F-5
TP604	F-5
TP605	J-5
TP606	J-5
TP607	H-5
TP608	H-5
TP609	G-7
TP610	H-7
TP611	G-5
TP612	G-7
TP613	H-7
TP614	H-6
TP615	H-7
TP616	J-7
TP617	H-7
TP618	J-7
TP619	G-9
TP620	H-9
TP621	G-10
TP622	H-10
TP623	H-7
TP624	H-9
TP625	H-9
TP626	H-9
TP801	D-20
TP821	D-17
TP841	B-5
TP861	B-3
TP881	B-9
TP901	B-8
TP921	D-16
TP941	B-13
X1	M-13
X2	G-10
X301	R-8
X302	S-9
X303	T-8
X401	G-11

* : B (Soldering) Side mount

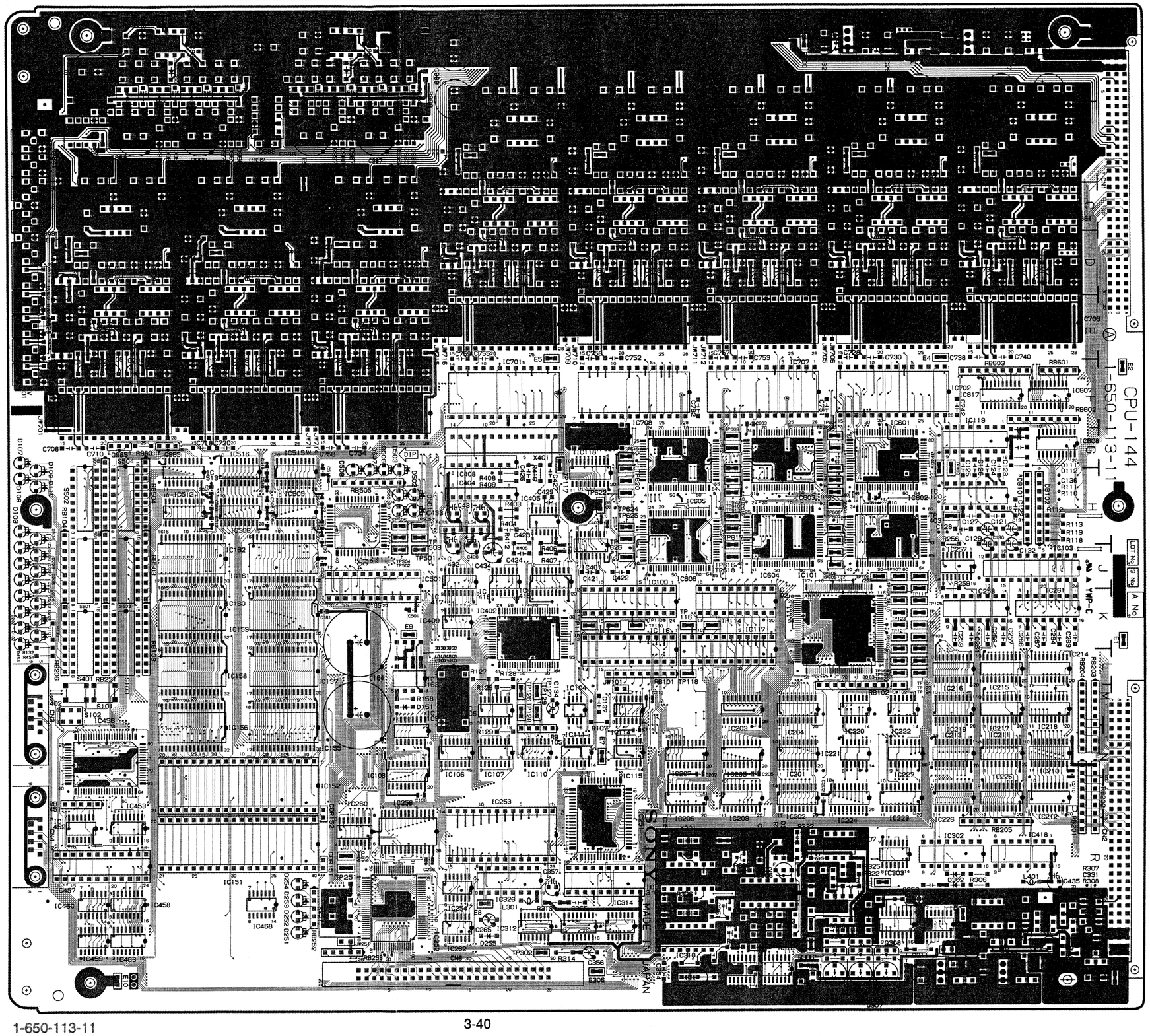

CPU-144
DMX-B4016 PROCESSOR

CPU-144

B (Soldering) Side

CPU-144 BOARD
1-650-113-11

CN1	C-1
CN2	R-1
CN3	M-20
CN4	R-20
DB101	H-1
DB102	H-2
D101	K-20
D102	K-20
D103	H-20
D104	H-20
D105	H-20
D106	H-20
D107	G-20
D108	H-20
D109	H-20
D110	H-20
D111	G-1
D112	H-1
D151	M-14
D201	K-20
D202	K-20
D203	K-20
D204	J-20
D205	J-20
D206	J-20
D207	J-20
D208	J-20
D301	S-1
D302	R-3
D303	R-3
D304	S-5
D305	R-6
D306	R-6
D307	R-7
D308	R-8
D309	S-7
D310	S-7
D451	K-20
D501	H-14
D502	L-14
D503	G-14
D504	H-14
D505	H-14
D506	G-14
D507	G-15
D508	H-15
D961	A-17
D962	A-18
D963	A-18
D964	A-19
D965	B-17
D966	B-17
D967	B-18
D968	B-18
D969	B-20
D981	A-14
D982	A-14
D983	A-15
D984	A-16
D985	B-14
D986	B-14
D987	B-15
D988	B-15
D989	B-16
E1	K-1
E2	F-1
E3	R-5
E4	E-4
E5	E-11
E6	H-10
E7	N-10
E8	S-13
E9	K-14
E10	T-19
E301	T-1
E302	T-1
E303	T-3
E304	T-6
E305	R-7
E306	T-10
E800	A-6
E801	D-20
E821	D-17
E841	B-5
E861	B-2
E881	C-9
E900	B-16
E901	B-7
E921	D-15
E941	B-12
IC1	E-20
IC2	D-20
IC3	E-18
IC4	D-18
IC5	D-5
IC6	C-5
IC7	D-3
IC8	C-3
IC9	A-3
IC10	A-5
IC51	D-9
IC52	C-10
IC53	D-8
IC54	D-8
IC55	E-16
IC56	D-16
IC57	D-13
IC58	B-13
IC100	J-9
IC101	J-6
IC102	K-6
IC103	J-1
IC104	M-10
IC105	M-13
IC106	N-13
IC107	N-12
IC108	N-15
IC109	M-14
IC110	N-11
IC111	N-10
IC112	*N-9
IC114	N-9
IC115	N-9
IC116	K-9
IC117	K-7
IC118	G-10
IC119	F-3
IC120	H-11
IC151	R-17
IC152	P-16
IC155	N-16
IC156	M-17
IC157	L-16
IC158	L-17
IC159	K-17
IC160	K-17
IC161	J-17
IC162	J-17
IC163	L-14
IC201	N-6
IC202	P-6
IC203	N-7
IC204	N-6
IC205	N-7
IC206	P-8
IC207	N-8
IC209	P-7
IC210	N-1
IC211	N-2
IC212	P-1
IC213	N-3
IC214	L-1
IC215	M-2
IC216	M-3
IC217	N-2
IC218	N-1
IC219	N-3
IC220	N-5
IC221	N-5
IC222	N-4
IC223	P-4
IC224	P-5
IC225	N-2
IC226	P-3
IC227	N-4
IC301	R-2
IC302	R-3
IC303	R-4
IC304	S-3
IC305	S-5
IC306	R-7
IC307	R-5
IC308	R-5
IC309	R-8
IC310	T-8
IC311	T-7
IC312	S-12
IC313	S-10
IC314	R-9
IC315	*S-9
IC316	R-9
IC317	*S-10
IC318	*S-11
IC319	T-6
IC320	S-12
IC321	T-4
IC322	T-2
IC401	J-10
IC402	K-12
IC403	*J-10
IC404	H-13
IC405	H-11
IC407	*H-9
IC408	H-13
IC409	K-13
IC410	*G-8
IC411	*H-8
IC412	*J-8
IC413	*H-9
IC414	*H-4
IC415	K-11
IC416	J-12
IC417	K-13
IC418	R-1
IC419	*G-4
IC420	*H-4
IC451	*N-20
IC452	P-20
IC453	P-19
IC454	*P-19
IC455	*N-20
IC456	M-20
IC457	R-20
IC458	R-19
IC459	T-20
IC460	R-20
IC461	*S-19
IC462	*J-17
IC463	T-19
IC467	*K-17
IC468	S-17
IC470	*P-20
IC501	J-14
IC502	*K-16
IC503	*J-15
IC504	J-15
IC505	H-16
IC506	H-17
IC507	*H-16
IC508	*H-17
IC509	*H-15
IC510	*H-18
IC511	*H-18
IC512	H-18
IC513	H-18
IC514	*J-16
IC515	G-16
IC516	G-17
IC517	*H-16
IC518	*H-17
IC601	F-4
IC602	H-4
IC603	H-6
IC604	I-7
IC605	H-8
IC606	J-8
IC607	F-1
IC608	G-1
IC609	*J-5
IC610	*J-5
IC611	*G-6
IC612	*G-5
IC613	*H-6
IC614	*H-5
IC615	*H-7
IC616	*G-7
IC617	F-2
IC701	E-12
IC702	F-4
IC703	T-19
IC704	D-16
IC705	D-4
IC706	E-1
IC707	F-6
IC708	E-9
IC709	D-8
IC710	D-6
IC711	F-14
IC712	E-11
IC801	E-18
IC802	E-19
IC803	D-19
IC821	E-16
IC822	E-17
IC823	D-17
IC841	C-3
IC842	C-4
IC843	B-4
IC861	C-1
IC862	C-1
IC863	B-6
IC881	C-8
IC882	C-9
IC883	B-9
IC901	C-6
IC902	C-6
IC903	B-6
IC921	D-13
IC922	E-14
IC923	D-14
IC941	C-10
IC942	C-11
IC943	B-11
IC961	A-18
IC981	A-15
Q301	S-1
Q302	R-7
Q303	R-5
Q304	T-5
Q305	R-6
Q306	T-6
Q307	T-5
Q308	T-4
Q961	A-17
Q962	A-18
Q963	A-19
Q964	A-20
Q965	G-18
Q981	A-14
Q982	A-15
Q983	A-15
Q984	A-16
Q985	G-19
RV301	T-5
RV302	T-5
RV303	T-4
RV801	F-20
RV802	E-20
RV821	E-20
RV822	D-20
RV841	B-20
RV861	B-20
RV881	C-20
RV901	C-20
RV921	D-20
RV941	D-20
RY962	B-20
RY981	B-17
S101	M-20
S102	M-20
S103	L-19
S501	K-20
S502	H-20
S503	K-19
S504	G-19
TP101	L-4
TP102	K-4
TP103	K-4
TP104	L-4
TP105	L-4
TP106	J-5
TP107	J-4
TP108	J-3
TP109	J-4
TP110	K-4
TP111	K-4
TP112	K-4
TP113	K-9
TP114	K-7
TP115	K-10
TP116	K-8
TP117	H-11
TP118	L-8
TP119	K-4
TP120	L-4
TP121	K-4
TP122	M-4
TP123	K-4
TP124	M-4
TP125	K-4
TP126	M-11
TP127	M-11
TP128	M-11
TP129	M-11
TP130	K-9
TP301	S-3
TP302	T-11
TP303	S-6
TP401	G-4
TP402	H-3
TP403	H-3
TP501	J-14
TP502	J-14
TP503	H-14
TP504	J-14
TP505	H-14
TP506	H-14
TP601	H-5
TP602	H-5
TP603	F-5
TP604	F-5
TP605	J-5
TP606	J-5
TP607	H-5
TP608	G-5
TP609	G-7
TP610	H-7
TP611	G-5
TP612	G-7
TP613	H-7
TP614	H-6
TP615	H-7
TP616	J-7
TP617	H-7
TP618	J-7
TP619	G-9
TP620	H-9
TP621	G-10
TP622	H-10
TP623	H-7
TP624	H-9
TP625	H-9
TP626	H-9
TP801	D-20
TP821	D-17
TP841	B-5
TP861	B-3
TP881	B-9
TP901	B-6
TP921	D-16
TP941	B-13
X1	M-13
X2	G-10
X301	R-8
X302	S-9
X303	T-8
X401	G-11

* : B (Soldering) Side mount

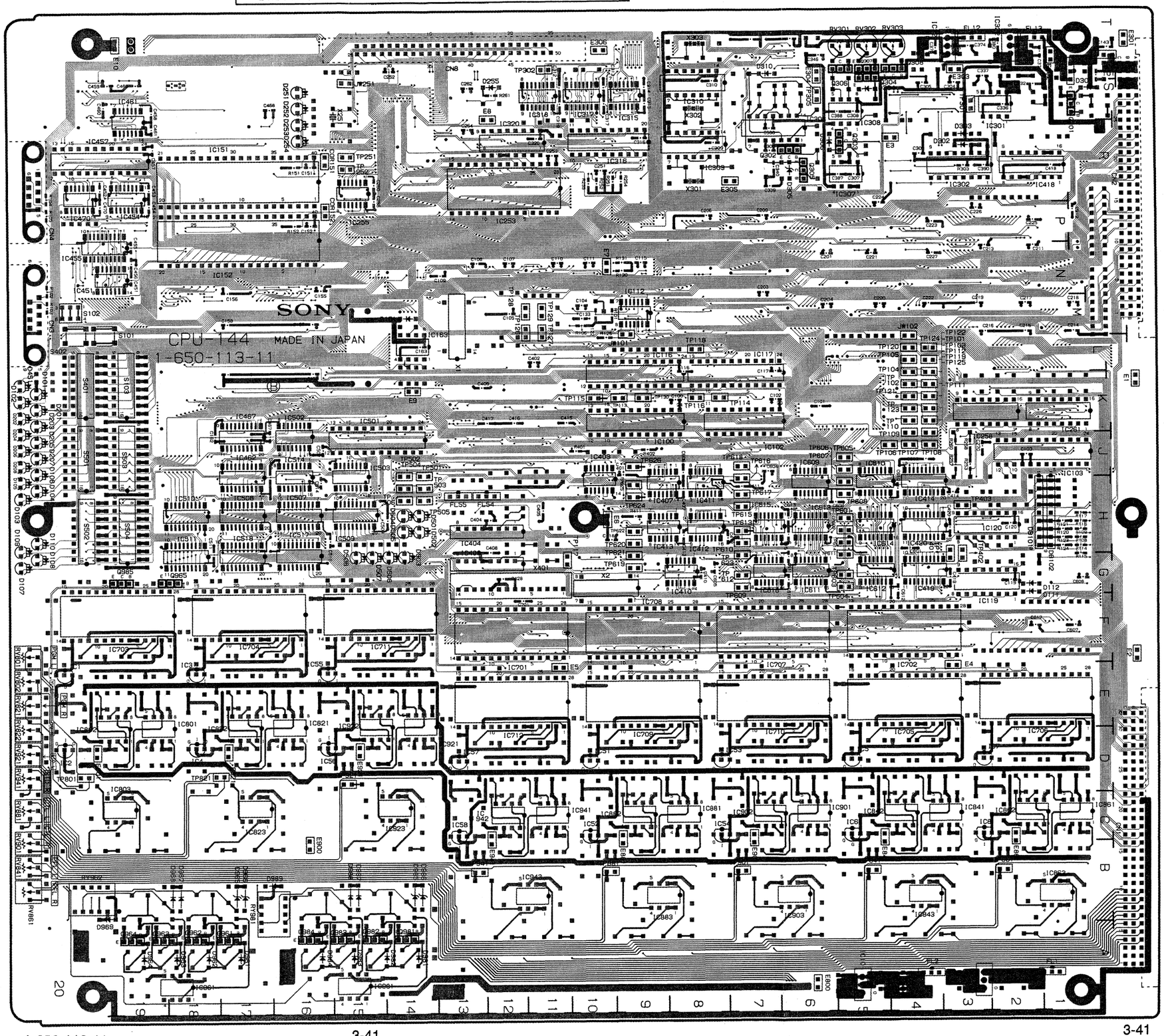

IPM-48 DMBK-4010 (OPTION)
DMX-B4016 PROCESSOR

IPM-48

A (Component) Side

IPM-48 BOARD
1-650-114-11, 12

CN1	C-1	IC316	G-4	TP619	A-11
CN2	N-1	IC317	H-4	TP620	A-11
CN3	J-14	IC318	J-7	TP621	C-10
CN4	L-14	IC401	A-2	TP622	C-10
		IC402	A-3	TP623	C-11
D101	N-14	IC403	B-2	TP624	C-11
D102	N-14	IC404	B-2	TP625	E-10
D103	N-14	IC405	D-3	TP626	E-10
D104	N-14	IC406	C-2	TP627	E-11
D105	N-14	IC407	C-3	TP628	E-11
D106	N-14	IC408	A-4	TP629	G-10
D107	N-14	IC409	B-3	TP630	G-10
D108	N-14	IC410	B-2	TP631	G-11
D109	P-14	IC502	E-4	TP632	G-11
D110	P-14	IC503	C-4	TP633	A-8
D151	K-12	IC504	G-3	TP634	A-8
D701	C-14	IC505	F-3	TP635	B-8
D702	C-14	IC601	A-10	TP636	B-8
D703	C-14	IC602	B-10	TP637	C-8
D704	C-14	IC603	B-10	TP638	C-8
D705	C-14	IC604	A-12	TP639	D-8
D706	C-14	IC605	B-12	TP640	E-8
D707	C-14	IC606	B-12	TP641	E-8
D708	C-14	IC607	C-10	TP642	F-8
D709	D-14	IC608	D-11	TP643	G-8
D710	D-14	IC609	D-11	TP644	G-8
D711	D-14	IC610	C-12	TP645	H-8
D712	D-14	IC611	D-12	TP646	H-8
D713	D-14	IC612	D-12	TP647	J-9
D714	D-14	IC613	E-10	TP648	J-8
D715	D-14	IC614	F-11	TP649	A-5
D716	D-14	IC615	F-11	TP650	A-5
D717	E-14	IC616	E-12	TP651	A-7
D718	E-14	IC617	F-12	TP652	A-7
D719	E-14	IC618	F-12	TP653	B-5
D720	E-14	IC619	G-10	TP654	B-5
D721	E-14	IC620	H-11	TP655	B-7
D722	E-14	IC621	J-11	TP656	B-7
D723	E-14	IC622	G-12	TP657	D-5
D724	E-14	IC623	H-12	TP658	D-5
D725	E-14	IC624	J-12	TP659	D-7
D726	E-14	IC625	A-9	TP660	D-7
D727	E-14	IC626	B-9	TP661	E-5
D728	E-14	IC627	C-9	TP662	E-5
D729	E-14	IC628	D-9	TP663	E-6
D730	E-14	IC629	F-9	TP664	E-6
D731	E-14	IC630	G-9	TP665	E-7
D732	E-14	IC631	H-9	TP666	E-7
D733	G-14	IC632	J-9	TP667	F-5
D734	G-14	IC633	A-6	TP668	G-5
D735	G-14	IC634	A-7	TP669	G-7
D736	G-14	IC635	B-6	TP670	F-7
		IC636	B-8	TP671	G-7
E1	P-13	IC637	C-6	TP672	G-7
E2	O-2	IC638	C-8		
E3	L-5	IC639	E-6	X101	M-7
E4	A-1	IC640	E-7	X102	J-6
E5	G-4	IC641	F-6		
E6	A-7	IC642	F-7		
E7	A-12	IC701	A-13		
E8	F-1	IC702	B-13		
E9	J-13	IC703	C-13		
		IC704	F-13		
IC101	P-7	IC705	D-13		
IC102	P-9	IC706	F-13		
IC103	M-6	IC707	J-13		
IC104	L-7	IC801	E-2		
IC105	M-6	IC802	E-1		
IC106	L-6	IC803	D-2		
IC107	M-7	IC804	D-2		
IC108	M-8	IC901	A-13		
IC109	L-8	IC902	D-13		
IC110	N-10	IC903	E-13		
IC111	J-10	IC904	G-13		
IC112	M-10	IC905	H-13		
IC113	M-10				
IC114	P-13	S101	H-14		
IC115	P-13	S102	H-14		
IC116	J-12	S103	N-14		
IC117	K-13	S701	B-14		
IC118	J-5	S702	D-14		
IC119	J-5	S703	E-14		
IC120	H-6	S704	G-14		
IC121	J-6	S705	G-14		
IC151	L-13	S706	A-14		
IC152	M-12				
IC153	N-12	TP101	N-7		
IC154	K-11	TP102	P-6		
IC155	P-11	TP103	P-6		
IC156	K-12	TP104	M-7		
IC157	P-12	TP105	N-7		
IC201	L-1	TP106	P-9		
IC202	R-3	TP107	P-8		
IC203	N-2	TP108	N-9		
IC204	P-2	TP109	N-9		
IC205	N-1	TP110	L-9		
IC206	L-2	TP111	O-6		
IC207	M-1	TP112	O-7		
IC208	M-2	TP113	O-7		
IC209	N-4	TP114	O-7		
IC210	M-4	TP115	P-9		
IC211	K-1	TP116	K-11		
IC212	K-2	TP117	J-11		
IC213	J-1	TP118	L-9		
IC214	H-3	TP119	K-11		
IC215	M-3	TP120	K-11		
IC216	L-9	TP121	J-11		
IC217	L-9	TP122	K-11		
IC218	N-6	TP123	J-6		
IC219	J-2	TP201	K-1		
IC220	L-3	TP601	A-10		
IC221	L-4	TP602	A-10		
IC222	H-1	TP603	A-12		
IC301	H-3	TP604	A-11		
IC302	H-8	TP605	B-10		
IC303	L-6	TP606	C-10		
IC304	J-7	TP607	B-11		
IC305	K-6	TP608	C-11		
IC306	K-7	TP609	D-10		
IC307	G-2	TP610	E-10		
IC308	J-4	TP611	D-11		
IC309	K-8	TP612	D-11		
IC310	J-8	TP613	G-10		
IC311	H-7	TP614	G-10		
IC312	K-5	TP615	G-11		
IC313	G-5	TP616	G-11		
IC314	G-4	TP617	A-10		
IC315	K-4	TP618	A-10		

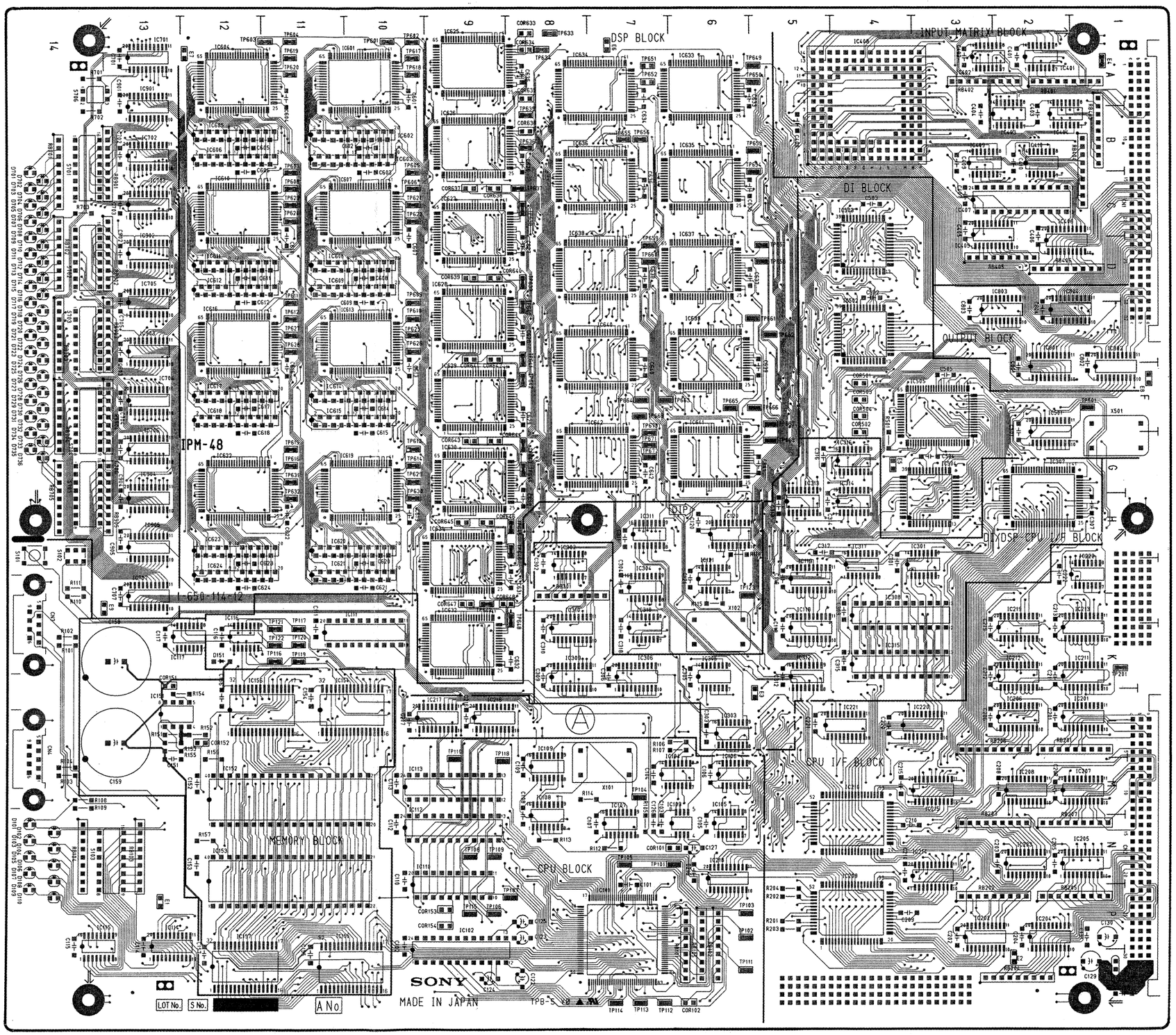

1-650-114-11, 12

IPM-48

B (Soldering) Side

IPM-48 BOARD
1-650-114-11, 12

CN1	C-1
CN2	M-1
CN3	J-14
CN4	L-14
D101	N-14
D102	N-14
D103	N-14
D104	N-14
D105	N-14
D106	N-14
D107	N-14
D108	N-14
D109	P-14
D110	P-14
D151	K-12
D701	C-14
D702	C-14
D703	C-14
D704	C-14
D705	C-14
D706	C-14
D707	C-14
D708	C-14
D709	D-14
D710	D-14
D711	D-14
D712	D-14
D713	D-14
D714	D-14
D715	D-14
D716	D-14
D717	E-14
D718	E-14
D719	E-14
D720	E-14
D721	E-14
D722	E-14
D723	E-14
D724	E-14
D725	F-14
D726	F-14
D727	F-14
D728	F-14
D729	F-14
D730	F-14
D731	F-14
D732	F-14
D733	G-14
D734	G-14
D735	G-14
D736	G-14
E1	P-13
E2	Q-2
E3	L-5
E4	A-1
E5	G-4
E6	A-7
E7	A-12
E8	F-1
E9	J-13
IC101	P-7
IC102	P-9
IC103	M-6
IC104	L-7
IC105	M-6
IC106	L-6
IC107	M-7
IC108	M-8
IC109	L-8
IC110	N-10
IC111	J-10
IC112	M-10
IC113	M-10
IC114	P-13
IC115	P-13
IC116	J-12
IC117	K-13
IC118	J-5
IC119	J-5
IC120	H-6
IC121	J-6
IC151	L-13
IC152	M-12
IC153	N-12
IC154	K-11
IC155	P-11
IC156	K-12
IC157	P-12
IC201	L-1
IC202	P-3
IC203	N-2
IC204	P-2
IC205	N-1
IC206	L-2
IC207	M-1
IC208	M-2
IC209	N-4
IC210	M-4
IC211	K-1
IC212	K-2
IC213	J-1
IC214	N-3
IC215	M-3
IC216	L-9
IC217	L-9
IC218	N-6
IC219	J-6
IC220	L-3
IC221	L-4
IC222	H-1
IC301	H-3
IC302	H-8
IC303	L-6
IC304	J-7
IC305	K-6
IC306	K-7
IC307	G-2
IC308	J-4
IC309	K-8
IC310	J-8
IC311	H-7
IC312	K-5
IC313	G-5
IC314	G-4
IC315	K-4
IC316	G-4
IC317	H-4
IC318	J-7
IC401	A-2
IC402	A-3
IC403	B-2
IC404	B-2
IC405	D-3
IC406	C-2
IC407	C-3
IC408	A-4
IC409	B-3
IC410	B-2
IC502	E-4
IC503	C-4
IC504	G-3
IC505	F-3
IC601	A-10
IC602	B-10
IC603	B-10
IC604	A-12
IC605	B-12
IC606	B-12
IC607	C-10
IC608	D-11
IC609	D-11
IC610	C-12
IC611	D-12
IC612	D-12
IC613	E-10
IC614	F-11
IC615	F-11
IC616	E-12
IC617	F-12
IC618	F-12
IC619	G-10
IC620	H-11
IC621	J-11
IC622	G-12
IC623	H-12
IC624	J-12
IC625	A-9
IC626	B-9
IC627	C-9
IC628	D-9
IC629	F-9
IC630	G-9
IC631	H-9
IC632	J-9
IC633	A-6
IC634	A-7
IC635	B-6
IC636	B-8
IC637	C-6
IC638	C-8
IC639	E-6
IC640	F-7
IC641	F-6
IC642	F-7
IC701	A-13
IC702	B-13
IC703	C-13
IC704	F-13
IC705	D-13
IC706	F-13
IC707	J-13
IC801	E-2
IC802	E-1
IC803	D-2
IC804	D-2
IC901	K-13
IC902	D-13
IC903	E-13
IC904	G-13
IC905	H-13
S101	H-14
S102	H-14
S103	N-14
S701	B-14
S702	D-14
S703	E-14
S704	G-14
S705	G-14
S706	A-14
TP101	N-7
TP102	P-6
TP103	P-6
TP104	M-7
TP105	N-7
TP106	P-9
TP107	P-8
TP108	N-9
TP109	N-9
TP110	L-9
TP111	Q-6
TP112	Q-7
TP113	Q-7
TP114	Q-7
TP115	P-9
TP116	K-11
TP117	J-11
TP118	L-9
TP119	K-11
TP120	K-11
TP121	J-11
TP122	K-11
TP123	J-6
TP201	K-1
TP601	A-10
TP602	A-10
TP603	A-12
TP604	A-11
TP605	B-10
TP606	C-10
TP607	B-11
TP608	C-11
TP609	D-10
TP610	E-10
TP611	D-11
TP612	D-11
TP613	G-10
TP614	G-10
TP615	G-11
TP616	G-11
TP617	A-10
TP618	A-10
TP619	A-11
TP620	A-11
TP621	C-10
TP622	C-10
TP623	C-11
TP624	C-11
TP625	E-10
TP626	E-10
TP627	E-11
TP628	E-11
TP629	G-10
TP630	G-10
TP631	G-11
TP632	G-11
TP633	A-8
TP634	A-8
TP635	B-8
TP636	B-8
TP637	C-8
TP638	C-8
TP639	D-8
TP640	E-8
TP641	E-8
TP642	F-8
TP643	G-8
TP644	G-8
TP645	H-8
TP646	H-8
TP647	J-9
TP648	J-9
TP649	A-5
TP650	A-5
TP651	A-7
TP652	A-7
TP653	B-5
TP654	B-5
TP655	B-7
TP656	B-7
TP657	D-5
TP658	D-5
TP659	D-7
TP660	D-7
TP661	E-5
TP662	E-5
TP663	E-6
TP664	E-6
TP665	E-6
TP666	E-7
TP667	E-5
TP668	G-5
TP669	F-7
TP670	F-7
TP671	G-7
TP672	G-7
X101	M-7
X102	J-6

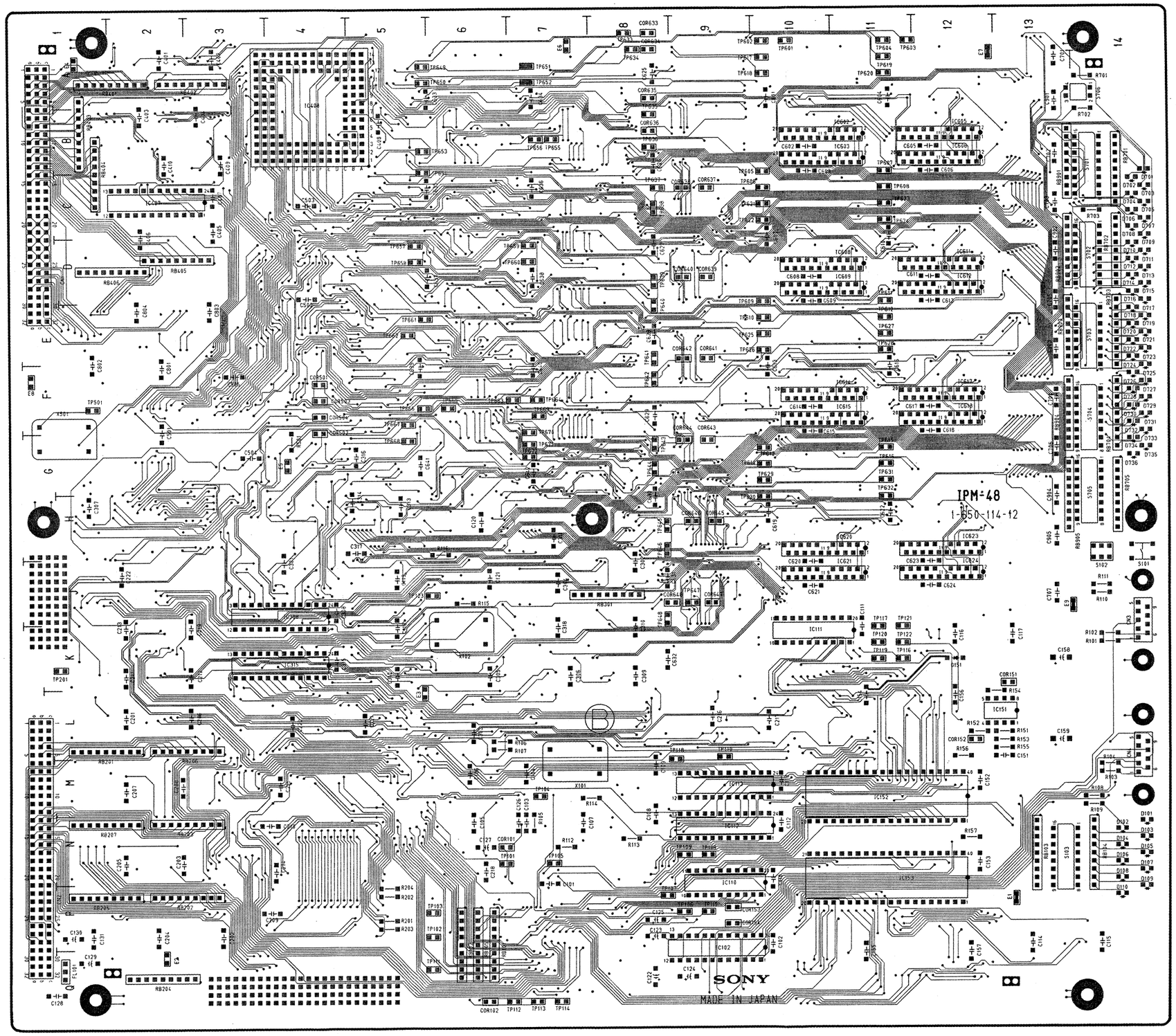

MIX-16 DMBK-4010/4011 (OPTION)
DMX-B4016 PROCESSOR

MIX-16

A (Component) Side

MIX-16 BOARD
1-650-115-11

CN1	B-1	IC315	E-4	S101	F-8	TP588	A-4
CN2	G-1	IC316	E-3	S102	F-8	TP589	A-4
CN3	C-8	IC317	E-3	S103	F-8	TP590	A-4
CN4	D-8	IC318	E-3	S901	F-8	TP601	C-5
		IC319	E-4	S902	F-8	TP602	D-6
D101	F-8	IC320	E-4	S903	F-8	TP603	D-6
D102	F-8	IC321	D-4	S904	G-8	TP604	D-6
D103	F-8	IC322	D-4			TP605	E-6
D104	F-8	IC323	D-4	TP1	G-4	TP606	D-6
D105	F-8	IC324	E-4	TP2	G-4	TP607	E-6
D106	F-8	IC401	E-5	TP100	G-3	TP608	D-5
D107	F-8	IC402	D-5	TP101	G-4	TP609	D-6
D108	F-8	IC403	D-5	TP102	G-4	TP610	E-5
D109	F-8	IC404	D-5	TP103	F-4	TP611	E-5
D110	F-8	IC405	C-5	TP104	F-4	TP612	D-6
D151	F-6	IC406	C-5	TP105	F-4	TP613	F-6
D401	F-8	IC407	B-5	TP106	F-4	TP614	D-7
D402	F-8	IC408	B-5	TP107	F-4	TP701	B-8
D403	F-8	IC409	C-5	TP108	G-3	TP702	C-8
D404	F-8	IC410	C-5	TP109	G-3	TP703	D-8
D405	F-8	IC411	B-5	TP110	G-3	TP704	D-8
D406	F-8	IC412	B-4	TP111	G-4	TP705	C-8
D407	F-8	IC413	B-5	TP112	F-4	TP706	D-8
D408	F-8	IC414	B-5	TP113	F-4	TP707	D-8
D901	A-8	IC415	B-6	TP114	F-4	TP708	D-7
D902	B-8	IC416	B-5	TP115	G-2	TP709	D-8
D903	B-8	IC417	B-5	TP116	G-2	TP710	D-7
D904	B-8	IC418	B-4	TP117	G-2	TP751	A-8
D905	B-8	IC419	B-5	TP118	G-2	TP752	A-8
D906	C-8	IC420	B-4	TP119	G-2	TP753	A-8
D907	C-8	IC421	B-6	TP120	G-2	TP754	B-8
D908	C-8	IC422	B-5	TP121	G-2	TP755	B-8
D909	E-8	IC423	A-6	TP122	G-2	TP756	B-8
D910	E-8	IC424	A-5	TP123	G-2	TP757	C-8
D911	E-8	IC425	B-5	TP124	F-5	TP758	B-7
D912	E-8	IC426	B-4	TP201	E-1	TP759	C-8
D913	F-8	IC427	A-5	TP202	E-1	TP760	C-7
D914	B-8	IC428	A-4	TP203	E-1	TP801	F-6
D915	A-8	IC429	A-6	TP204	E-1	TP802	F-6
D916	A-8	IC430	A-5	TP500	D-2	TP803	G-8
D917	A-8	IC431	A-6	TP501	C-2	TP804	G-8
D918	B-8	IC432	A-5	TP502	C-2	TP805	F-5
D919	B-8	IC433	A-5	TP503	C-2	TP806	F-6
D920	B-8	IC434	A-4	TP504	C-2	TP807	F-6
D921	B-8	IC435	A-5	TP505	C-2	TP808	F-6
D922	E-8	IC436	A-4	TP506	C-2	TP809	F-6
D923	E-8	IC438	C-5	TP507	B-2	TP810	F-6
D924	E-8	IC439	D-5	TP508	B-2	TP811	F-6
D925	E-8	IC440	C-4	TP509	B-2	TP812	F-6
D926	F-8	IC501	C-1	TP510	B-2	TP851	F-7
		IC502	D-1	TP511	B-2	TP852	F-7
E1	A-8	IC503	D-1	TP512	A-2	TP853	E-8
E2	A-4	IC504	E-1	TP513	A-2	TP854	E-8
E3	A-1	IC506	D-2	TP514	A-2	TP855	E-8
E4	D-8	IC507	C-1	TP515	A-2	TP856	E-8
E5	D-6	IC508	C-1	TP516	A-2	TP857	E-8
E6	E-2	IC509	B-1	TP517	A-2	TP858	E-7
E7	E-1	IC510	A-1	TP518	A-2	TP859	E-8
E8	G-8	IC511	D-2	TP519	A-2	TP860	E-7
E9	G-4	IC512	C-2	TP520	A-2		
E10	G-2	IC513	B-2	TP521	C-2	X1	F-4
		IC514	A-2	TP522	C-2	X2	F-5
IC100	G-3	IC515	B-1	TP523	C-2		
IC101	F-3	IC516	C-1	TP524	C-2		
IC102	G-4	IC551	D-3	TP525	C-2		
IC103	F-5	IC552	C-3	TP526	C-2		
IC104	F-5	IC553	B-3	TP527	B-2		
IC105	E-5	IC554	A-3	TP528	B-2		
IC106	E-5	IC555	D-3	TP529	B-2		
IC107	E-5	IC556	C-3	TP530	B-2		
IC108	G-3	IC557	B-3	TP531	B-2		
IC109	G-3	IC558	A-3	TP532	A-2		
IC110	G-2	IC601	D-5	TP533	A-2		
IC111	G-2	IC602	C-6	TP534	B-2		
IC112	F-2	IC603	C-7	TP535	A-2		
IC114	F-4	IC604	D-7	TP536	A-2		
IC115	G-4	IC605	D-7	TP537	A-2		
IC116	G-4	IC606	D-6	TP538	A-2		
IC117	G-3	IC607	D-6	TP539	A-2		
IC118	F-5	IC608	E-6	TP540	B-1		
IC119	E-5	IC701	B-6	TP541	B-1		
IC120	E-5	IC702	B-7	TP542	B-1		
IC121	E-5	IC703	C-6	TP543	B-1		
IC151	F-6	IC704	C-7	TP544	B-1		
IC152	G-7	IC705	B-6	TP545	B-1		
IC153	G-7	IC706	B-7	TP546	B-1		
IC154	G-6	IC707	B-6	TP547	B-1		
IC155	G-6	IC708	B-7	TP548	C-1		
IC156	G-5	IC709	C-5	TP549	C-1		
IC157	G-5	IC710	B-7	TP550	C-1		
IC201	E-1	IC711	C-7	TP551	D-3		
IC202	F-1	IC712	D-7	TP552	C-3		
IC203	F-1	IC713	C-8	TP553	C-3		
IC204	G-1	IC714	D-8	TP554	C-3		
IC205	G-1	IC751	A-6	TP555	C-3		
IC206	E-1	IC752	A-7	TP556	C-3		
IC207	F-1	IC753	B-6	TP557	C-3		
IC208	F-1	IC754	B-7	TP558	B-3		
IC209	F-1	IC755	A-6	TP559	B-3		
IC210	G-1	IC756	A-7	TP560	B-3		
IC211	E-1	IC757	A-6	TP561	B-3		
IC212	E-1	IC758	A-7	TP562	B-3		
IC213	F-2	IC759	A-7	TP563	A-3		
IC214	E-2	IC760	A-8	TP564	A-3		
IC215	E-2	IC761	A-7	TP565	B-3		
IC216	F-2	IC762	B-8	TP566	A-3		
IC217	F-2	IC763	B-8	TP567	A-3		
IC218	G-2	IC801	E-7	TP568	A-3		
IC219	F-2	IC802	F-6	TP569	A-3		
IC220	F-2	IC803	F-7	TP570	A-3		
IC221	G-2	IC804	F-7	TP571	D-4		
IC222	G-2	IC805	F-7	TP572	C-4		
IC223	G-2	IC851	E-7	TP573	C-4		
IC301	D-4	IC852	E-8	TP574	C-4		
IC302	D-3	IC853	E-8	TP575	C-4		
IC303	D-3	IC854	D-7	TP576	C-4		
IC304	E-3	IC901	B-8	TP577	C-4		
IC305	D-3	IC902	B-8	TP578	B-4		
IC306	D-3	IC903	D-8	TP579	B-4		
IC307	E-3	IC904	E-8	TP580	B-4		
IC308	E-2	IC905	A-1	TP581	B-4		
IC309	E-4	IC906	A-1	TP582	B-4		
IC310	E-3	IC907	A-1	TP583	A-4		
IC311	E-2	IC908	G-8	TP584	A-4		
IC312	E-2	IC909	G-8	TP585	B-4		
IC313	E-4	IC910	G-8	TP586	A-4		
IC314	E-3	IC911	G-8	TP587	A-4		

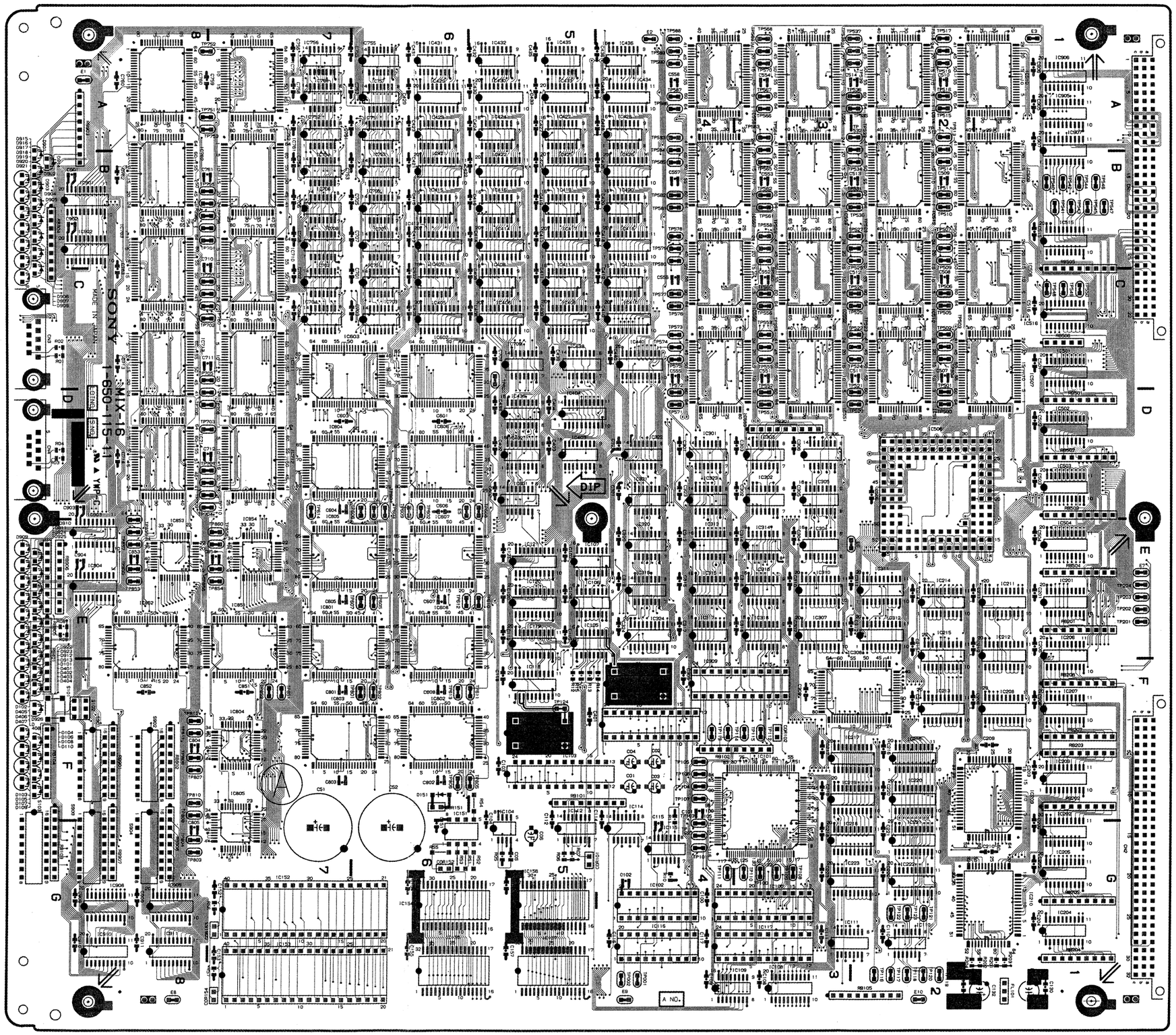

MIX-16 DMBK-4010/4011 (OPTION)
DMX-B4016 PROCESSOR

MIX-16

B (Soldering) Side

MIX-16 BOARD
1-650-115-11

CN1	B-1	IC315	E-4	S101	F-8	TP588	A-4
CN2	G-1	IC316	E-3	S102	F-8	TP589	A-4
CN3	C-8	IC317	E-4	S103	F-8	TP590	A-4
CN4	D-8	IC318	E-3	S901	F-8	TP601	C-5
		IC319	E-4	S902	F-8	TP602	D-6
D101	F-8	IC320	E-4	S903	F-8	TP603	D-6
D102	F-8	IC321	D-4	S904	G-8	TP604	D-6
D103	F-8	IC322	D-4			TP605	E-6
D104	F-8	IC323	D-4	TP1	G-4	TP606	D-6
D105	F-8	IC324	E-4	TP2	G-4	TP607	E-5
D106	F-8	IC401	F-4	TP100	G-3	TP608	D-5
D107	F-8	IC402	D-5	TP101	G-4	TP609	D-6
D108	F-8	IC403	D-5	TP102	G-4	TP610	E-5
D109	F-8	IC404	D-5	TP103	F-4	TP611	F-5
D110	F-8	IC405	C-6	TP104	F-4	TP612	D-6
D151	F-6	IC406	C-5	TP105	F-4	TP613	F-6
D401	F-8	IC407	B-6	TP106	F-4	TP614	D-7
D402	F-8	IC408	B-5	TP107	F-4	TP701	B-8
D403	F-8	IC409	C-5	TP108	G-3	TP702	C-8
D404	F-8	IC410	C-4	TP109	G-3	TP703	D-8
D405	F-8	IC411	B-5	TP110	G-3	TP704	D-8
D406	F-8	IC412	B-4	TP111	G-4	TP705	C-8
D407	F-8	IC413	B-6	TP112	F-3	TP706	D-8
D408	F-8	IC414	B-5	TP113	F-4	TP707	D-8
D901	A-8	IC415	B-6	TP114	F-4	TP708	D-7
D902	B-8	IC416	B-5	TP115	F-3	TP709	D-9
D903	B-8	IC417	B-5	TP116	G-2	TP710	D-7
D904	B-8	IC418	B-4	TP117	G-2	TP751	A-8
D905	B-8	IC419	B-5	TP118	G-2	TP752	A-8
D906	C-8	IC420	B-4	TP119	G-2	TP753	A-8
D907	C-8	IC421	B-6	TP120	G-2	TP754	B-8
D908	C-8	IC422	B-6	TP121	G-2	TP755	B-8
D909	E-8	IC423	A-6	TP122	G-2	TP756	B-8
D910	E-8	IC424	A-5	TP123	G-2	TP757	C-8
D911	E-8	IC425	B-5	TP124	F-5	TP758	B-7
D912	E-8	IC426	B-4	TP201	E-1	TP759	C-8
D913	F-8	IC427	A-5	TP202	E-1	TP760	C-7
D914	B-8	IC428	A-4	TP203	E-1	TP801	F-6
D915	A-8	IC429	A-6	TP204	E-1	TP802	A-6
D916	A-8	IC430	A-5	TP500	D-2	TP803	G-8
D917	A-8	IC431	A-6	TP501	C-2	TP804	G-8
D918	B-8	IC432	A-5	TP502	C-2	TP805	F-5
D919	B-8	IC433	A-5	TP503	C-2	TP806	F-6
D920	B-8	IC434	A-4	TP504	C-2	TP807	F-6
D921	B-8	IC435	A-5	TP505	C-2	TP808	F-6
D922	E-8	IC436	A-4	TP506	C-2	TP809	F-6
D923	E-8	IC438	C-5	TP507	B-2	TP810	F-6
D924	E-8	IC439	D-5	TP508	B-2	TP811	F-6
D925	E-8	IC440	C-4	TP509	B-2	TP812	F-6
D926	F-8	IC501	C-1	TP510	B-2	TP851	F-7
		IC502	D-1	TP511	B-2	TP852	F-7
E1	A-8	IC503	D-1	TP512	A-2	TP853	E-8
E2	A-4	IC504	E-1	TP513	A-2	TP854	E-8
E3	A-1	IC506	D-2	TP514	B-2	TP855	E-8
E4	D-6	IC507	C-1	TP515	A-2	TP856	E-8
E5	D-6	IC508	C-1	TP516	A-2	TP857	E-8
E6	E-2	IC509	B-1	TP517	A-2	TP858	E-7
E7	E-1	IC510	A-1	TP518	A-2	TP859	E-8
E8	G-4	IC511	D-2	TP519	A-2	TP860	E-7
E9	G-4	IC512	C-2	TP520	D-2		
E10	G-2	IC513	B-2	TP521	C-2	X1	F-4
		IC514	A-2	TP522	C-2	X2	F-5
IC100	G-3	IC515	B-1	TP523	C-2		
IC101	F-3	IC516	C-1	TP524	C-2		
IC102	G-4	IC551	D-3	TP525	C-2		
IC103	F-5	IC552	C-3	TP526	C-2		
IC104	F-5	IC553	B-3	TP527	B-2		
IC105	E-5	IC554	A-3	TP528	B-2		
IC106	E-5	IC555	D-3	TP529	B-2		
IC107	E-5	IC556	C-3	TP530	B-2		
IC108	G-3	IC557	B-3	TP531	B-2		
IC109	G-3	IC558	A-3	TP532	A-2		
IC110	G-2	IC601	D-5	TP533	A-2		
IC111	G-2	IC602	C-5	TP534	B-2		
IC112	F-5	IC603	C-6	TP535	A-2		
IC114	F-4	IC604	D-7	TP536	A-2		
IC115	G-4	IC605	D-7	TP537	A-2		
IC116	G-4	IC606	D-6	TP538	A-2		
IC117	G-3	IC607	D-6	TP539	A-2		
IC118	F-5	IC608	E-6	TP540	B-1		
IC119	E-5	IC701	B-6	TP541	B-1		
IC120	E-5	IC702	B-7	TP542	B-1		
IC121	E-5	IC703	C-6	TP543	B-1		
IC151	F-6	IC704	C-7	TP544	B-1		
IC152	G-7	IC705	B-6	TP545	B-1		
IC153	G-7	IC706	B-7	TP546	B-1		
IC154	G-6	IC707	B-6	TP547	B-1		
IC155	G-6	IC708	B-7	TP548	C-1		
IC156	G-5	IC709	C-5	TP549	C-1		
IC157	G-5	IC710	B-7	TP550	C-1		
IC201	F-1	IC711	C-7	TP551	D-3		
IC202	F-1	IC712	D-7	TP552	C-3		
IC203	F-1	IC713	C-8	TP553	C-3		
IC204	G-1	IC714	D-8	TP554	C-3		
IC205	G-1	IC751	A-6	TP555	C-3		
IC206	F-1	IC752	A-7	TP556	C-3		
IC207	F-1	IC753	B-6	TP557	C-3		
IC208	F-1	IC754	B-7	TP558	B-3		
IC209	F-1	IC755	A-6	TP559	B-3		
IC210	G-1	IC756	A-7	TP560	B-3		
IC211	F-1	IC757	A-6	TP561	B-3		
IC212	F-1	IC758	A-7	TP562	B-3		
IC213	F-2	IC759	A-7	TP563	A-3		
IC214	F-2	IC760	A-6	TP564	A-3		
IC215	F-2	IC761	A-7	TP565	B-3		
IC216	F-2	IC762	B-8	TP566	A-3		
IC217	F-2	IC763	B-8	TP567	A-3		
IC218	G-2	IC801	E-7	TP568	A-3		
IC219	F-2	IC802	F-6	TP569	A-3		
IC220	F-2	IC803	F-7	TP570	A-3		
IC221	G-2	IC804	F-7	TP571	D-4		
IC222	G-2	IC805	F-7	TP572	C-4		
IC223	G-2	IC851	E-7	TP573	C-4		
IC301	D-4	IC852	E-8	TP574	C-4		
IC302	D-3	IC853	E-8	TP575	C-4		
IC303	D-3	IC854	D-7	TP576	C-4		
IC304	E-3	IC901	B-8	TP577	C-4		
IC305	D-3	IC902	B-8	TP578	B-4		
IC306	D-3	IC903	D-8	TP579	B-4		
IC307	E-3	IC904	E-8	TP580	B-4		
IC308	E-2	IC905	A-1	TP581	B-4		
IC309	F-4	IC906	A-1	TP582	B-4		
IC310	E-3	IC907	A-1	TP583	A-4		
IC311	E-2	IC908	G-8	TP584	A-4		
IC312	E-2	IC909	G-8	TP585	B-4		
IC313	E-4	IC910	G-8	TP586	A-4		
IC314	E-3	IC911	G-8	TP587	A-4		

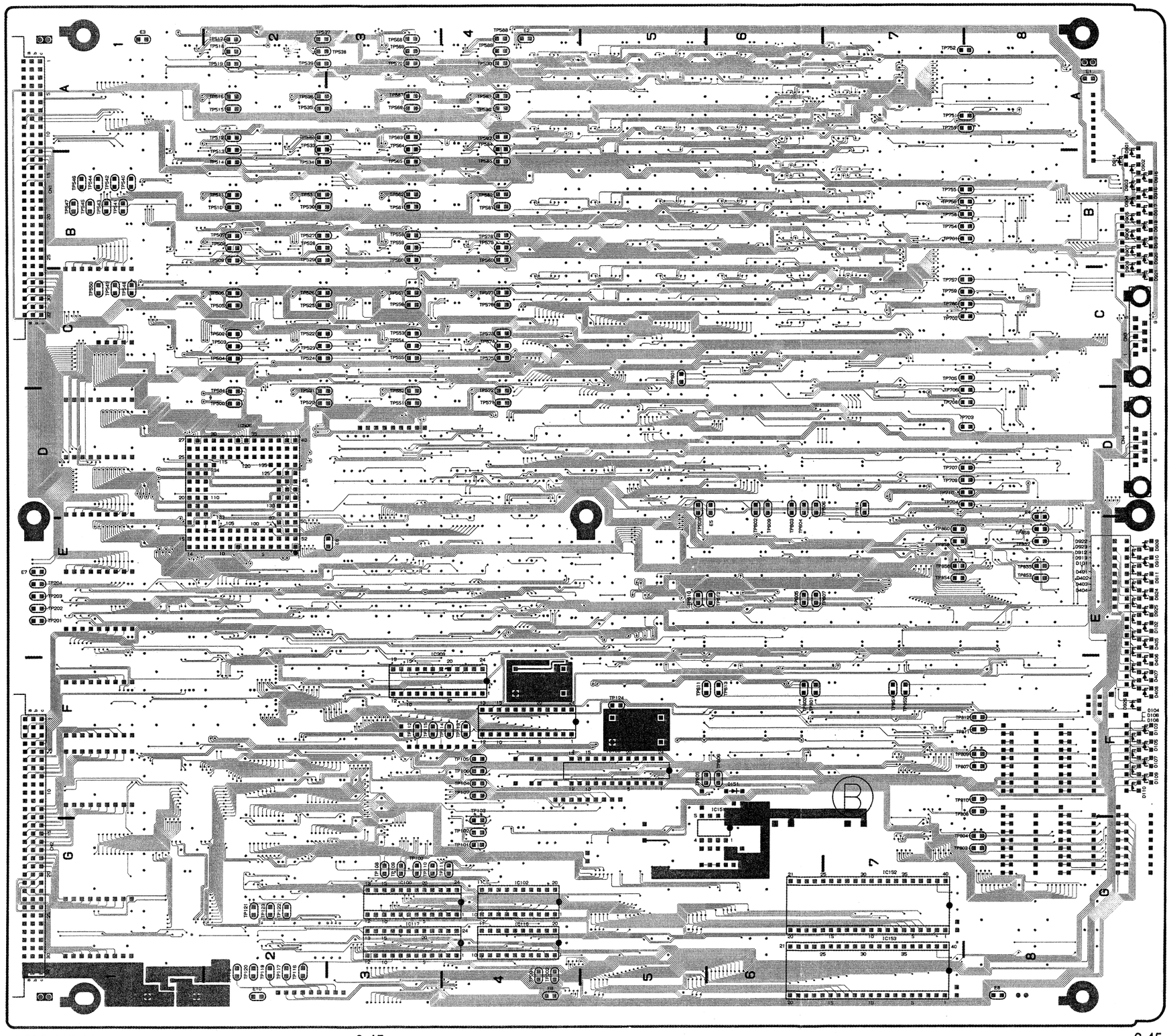

3-45

MB-480
DMX-B4016 PROCESSOR

MB-480

A (Component) Side

MB-480 BOARD
1-650-112-11

CN6	*E-1
CN7	*E-3
CN8	*E-5
CN9	*E-7
CN1A	B-1
CN1B	H-1
CN10	*E-9
CN11	*E-10
CN12	*H-1
CN13	*J-1
CN14	*A-1
CN2A	B-4
CN2B	H-4
CN3A	B-5
CN3B	H-5
CN4A	A-8
CN4B	H-8
CN5A	B-10
CN5B	H-10

* : B (Soldering) Side mount

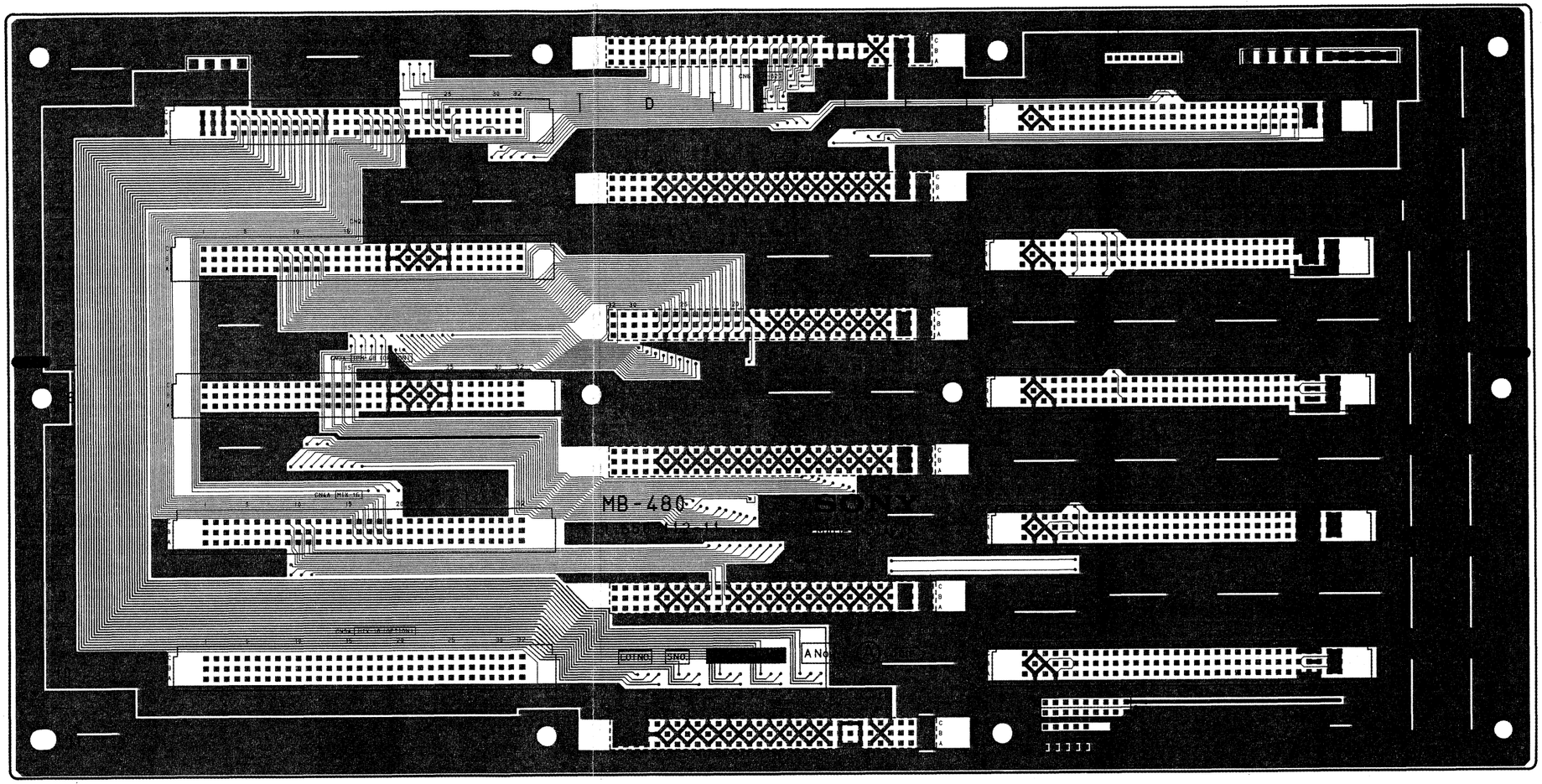

1-650-112-11

3-46

MB-480
DMX-B4016 PROCESSOR

MB-480

B (Soldering) Side

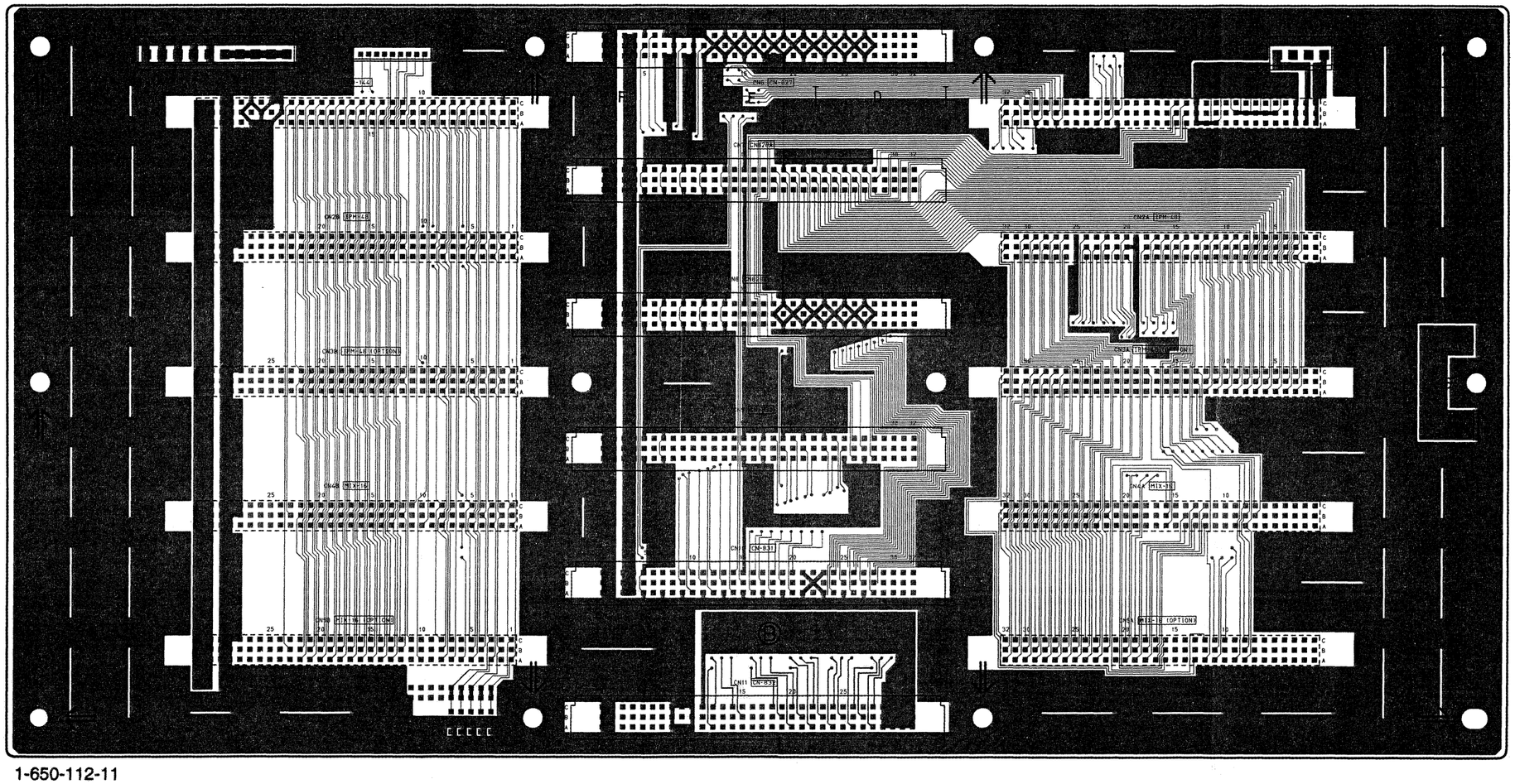

1-650-112-11

MB-480 BOARD
1-650-112-11

CN6	*E-1
CN7	*E-3
CN8	*E-5
CN9	*E-7
CN1A	B-1
CN1B	H-1
CN10	*E-9
CN11	*E-10
CN12	*H-1
CN13	*J-1
CN14	*A-1
CN2A	B-4
CN2B	H-4
CN3A	B-5
CN3B	H-5
CN4A	A-8
CN4B	H-8
CN5A	B-10
CN5B	H-10

* : B (Soldering) Side mount

3-47

CN-827
DMX-B4016 PROCESSOR

CN-827

A (Component) Side

CN-827 BOARD
1-650-116-11

CN1	H-6
CN2	B-1
CN3	E-1
CN6	L-1
CN7	M-1
CN8	N-1
CN9	P-1
CN10	R-1
CN11	S-1
D1	J-2
D2	J-2
D3	J-2
D4	J-2
IC1	J-3
IC2	J-4

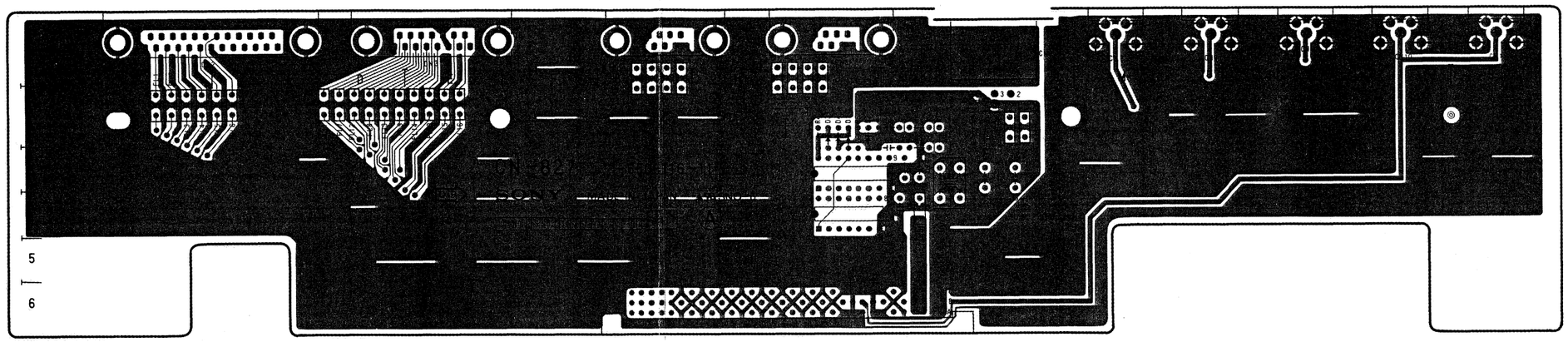

1-650-116-11

B (Soldering) Side

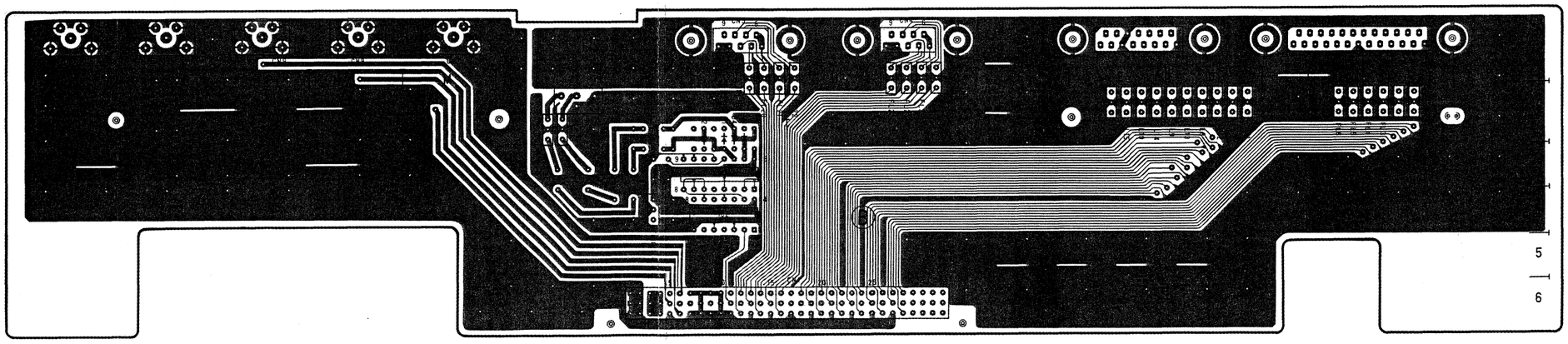

1-650-116-11

3-48

CN-828A/828B
DMX-B4016 PROCESSOR

CN-828A/828B

A (Component) Side

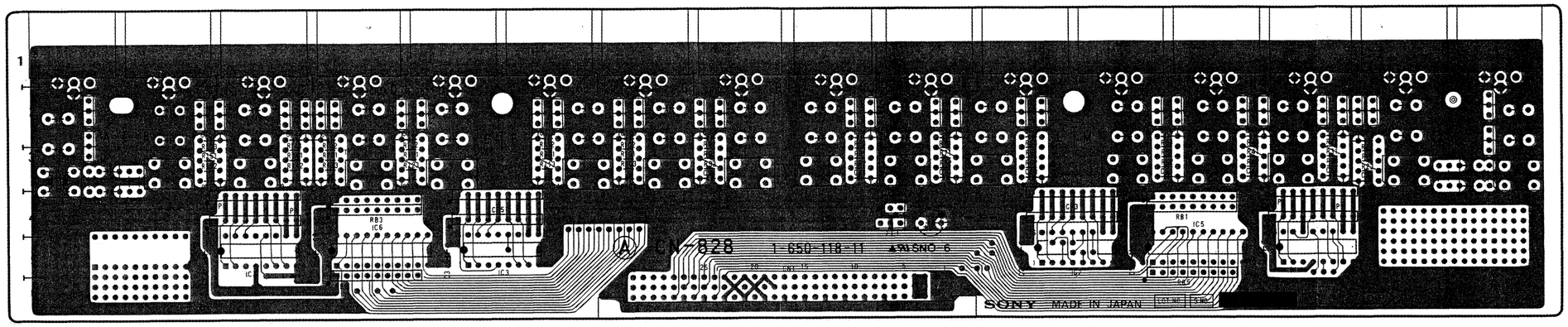

1-650-118-11

CN-828A/828B BOARD
1-650-118-11

B (Soldering) Side

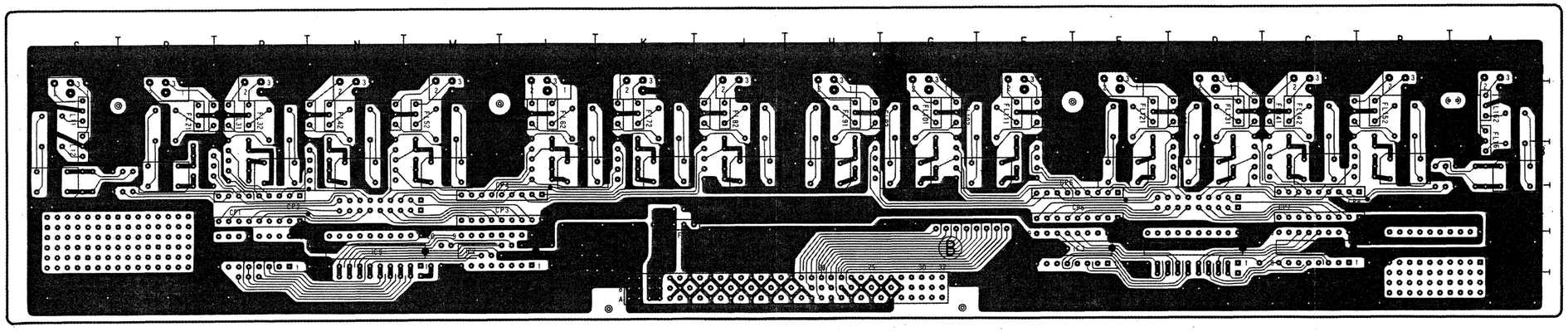

1-650-118-11

3-49

CN-830
DMX-B4016 PROCESSOR

CN-830

A (Component) Side

CN-830 BOARD
1-650-117-11

CN1	J-5
CN2	S-2
CN3	R-2
CN4	P-2
CN5	N-2
CN6	M-2
CN9	J-2
CN10	H-2
CN11	G-2
CN12	F-2
CN13	E-2
CN14	D-2
CN15	C-2
CN16	B-2
CN17	A-2
CP1	P-4
CP2	P-4
CP3	L-4
CP4	L-3
CP5	E-4
CP6	E-4
CP7	C-4
CP8	C-4
D91	H-4
D92	J-4
D93	J-4
D94	J-4
IC1	P-6
IC2	M-6
IC3	H-4
IC4	E-4
IC5	C-4
IC6	M-5
IC7	G-4
IC8	D-4

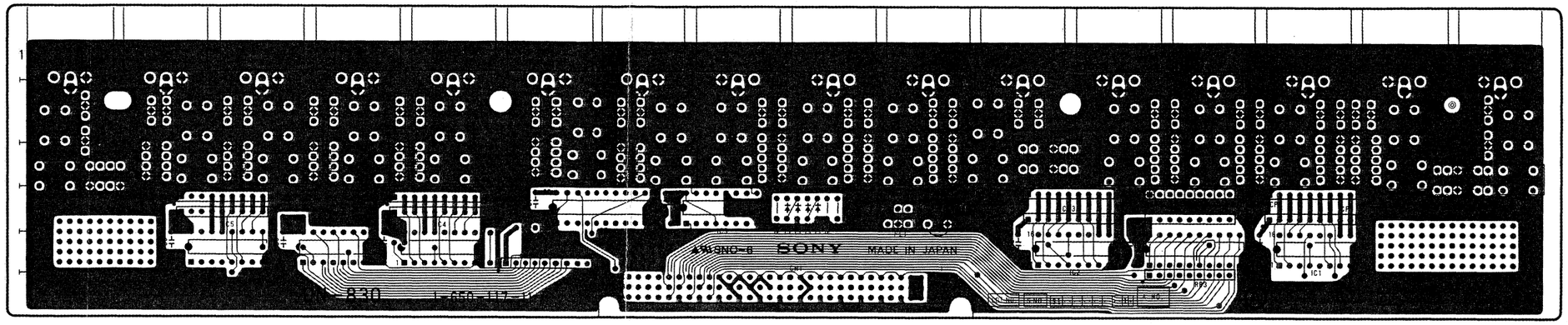

1-650-117-11

B (Soldering) Side

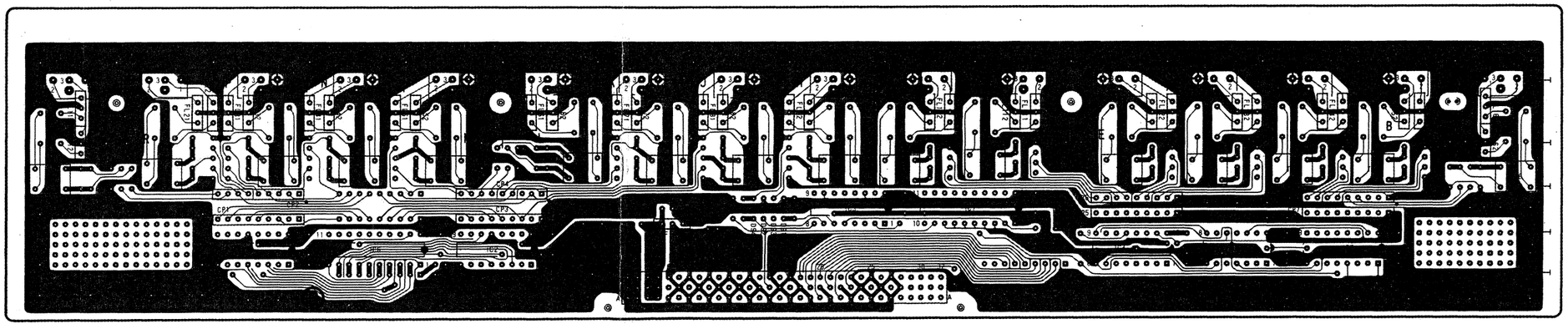

1-650-117-11

3-50

CN-831
DMX-B4016 PROCESSOR

CN-831

A (Component) Side

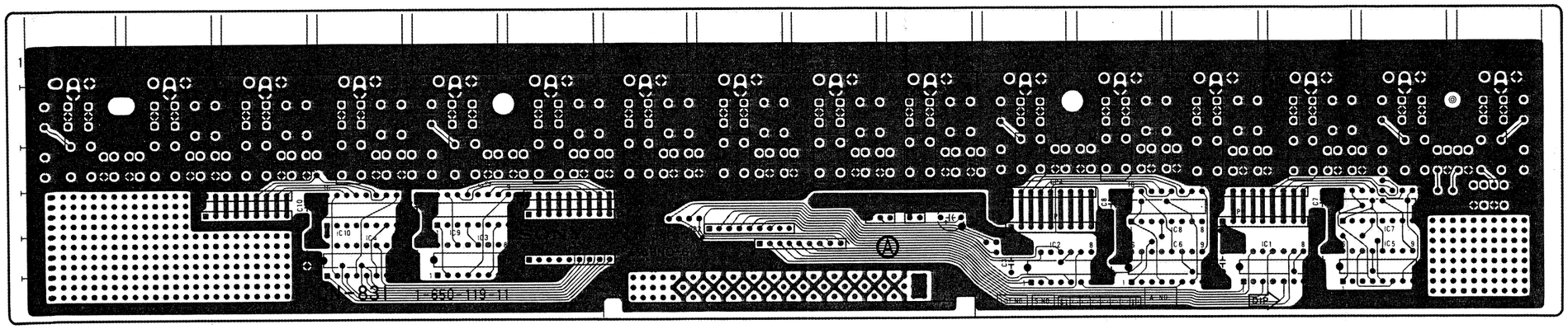

1-650-119-11

CN-831 BOARD
1-650-119-11

CN1	H-5
CN2	P-1
CN3	P-1
CN4	P-1
CN5	N-1
CN6	M-1
CN7	K-1
CN8	K-1
CN9	J-1
CN10	H-1
CN11	G-1
CN12	F-1
CN13	E-1
CN14	D-1
CN15	C-1
CN16	B-1
CN17	A-1
CP1	N-4
CP2	N-3
CP3	L-3
CP4	L-3
CP5	G-4
CP6	G-4
CP7	C-4
CP8	C-3
IC1	P-5
IC2	P-5
IC3	P-5
IC4	P-5
IC5	P-5
IC6	N-4
IC7	N-4
IC8	M-4
IC9	M-4
IC10	D-4

B (Soldering) Side

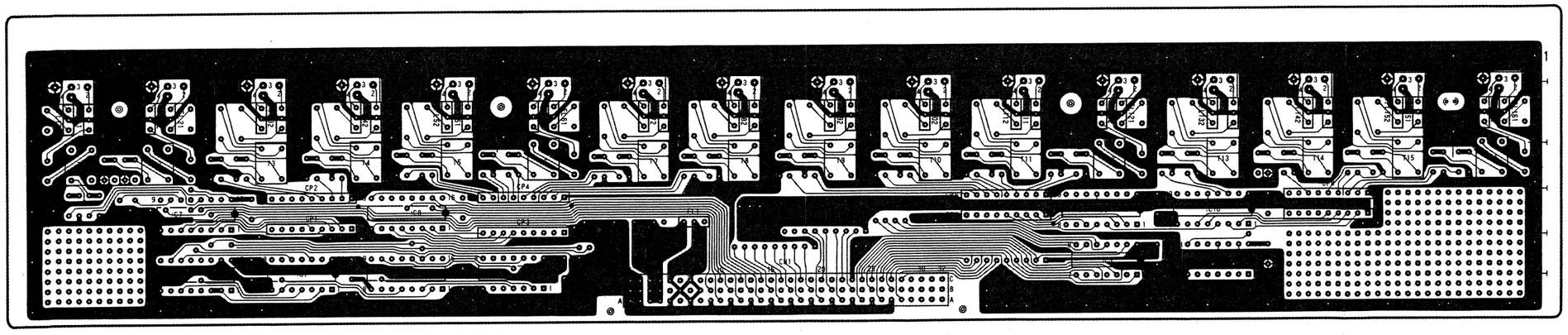

1-650-119-11

3-51

CN-832A/832B
DMX-B4016 PROCESSOR

CN-832A/832B

A (Component) Side

CN-832A/832B BOARD
1-650-120-11

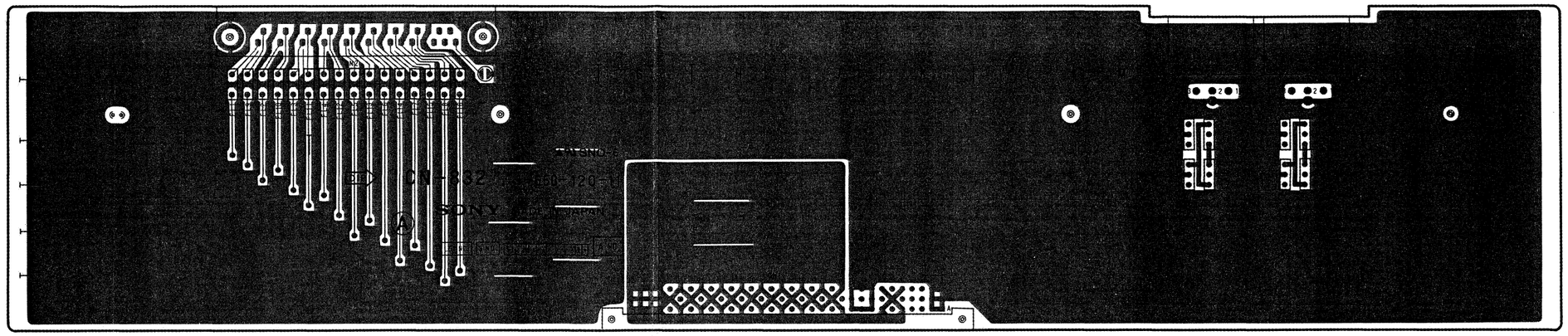

1-650-120-11

B (Soldering) Side

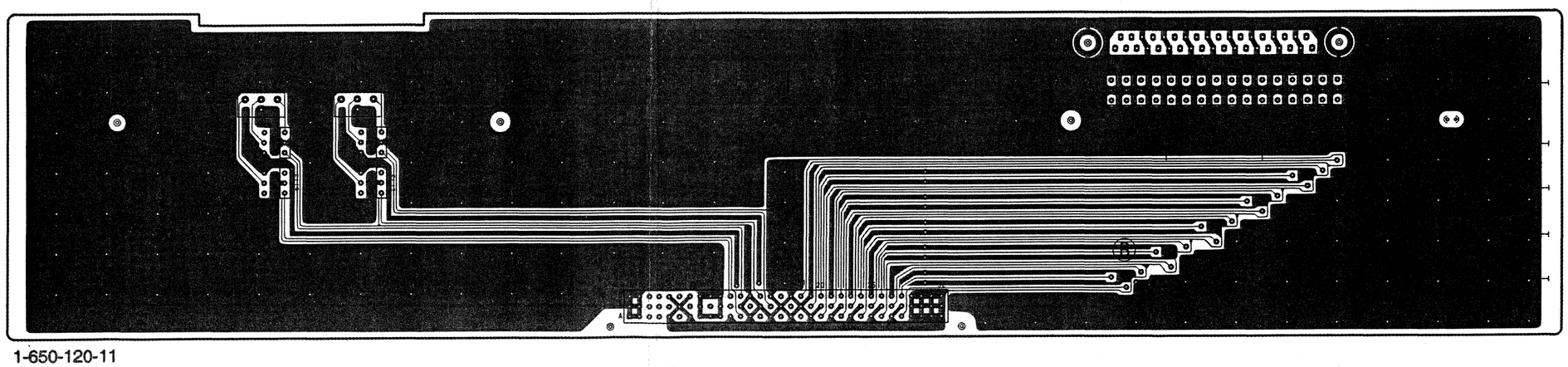

1-650-120-11

3-52

PS-314

A (Component) Side

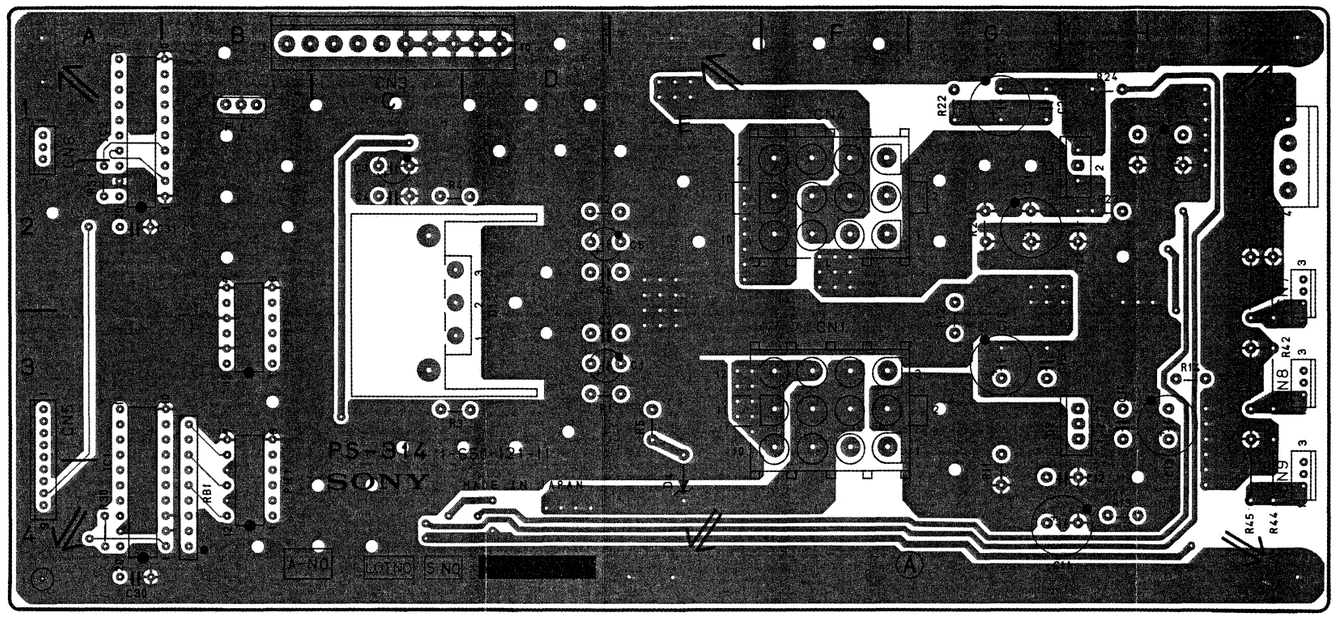

1-650-121-11

PS-314 BOARD
1-650-121-11

CN1	F-3
CN2	I-2
CN3	C-1
CN4	F-1
CN5	A-3
CN6	A-1
CN7	I-2
CN8	I-3
CN9	I-4
D1	D-3
D2	G-3
D3	G-2
D4	E-4
IC1	A-4
IC2	A-1
PH1	B-4
PH2	B-3

B (Soldering) Side

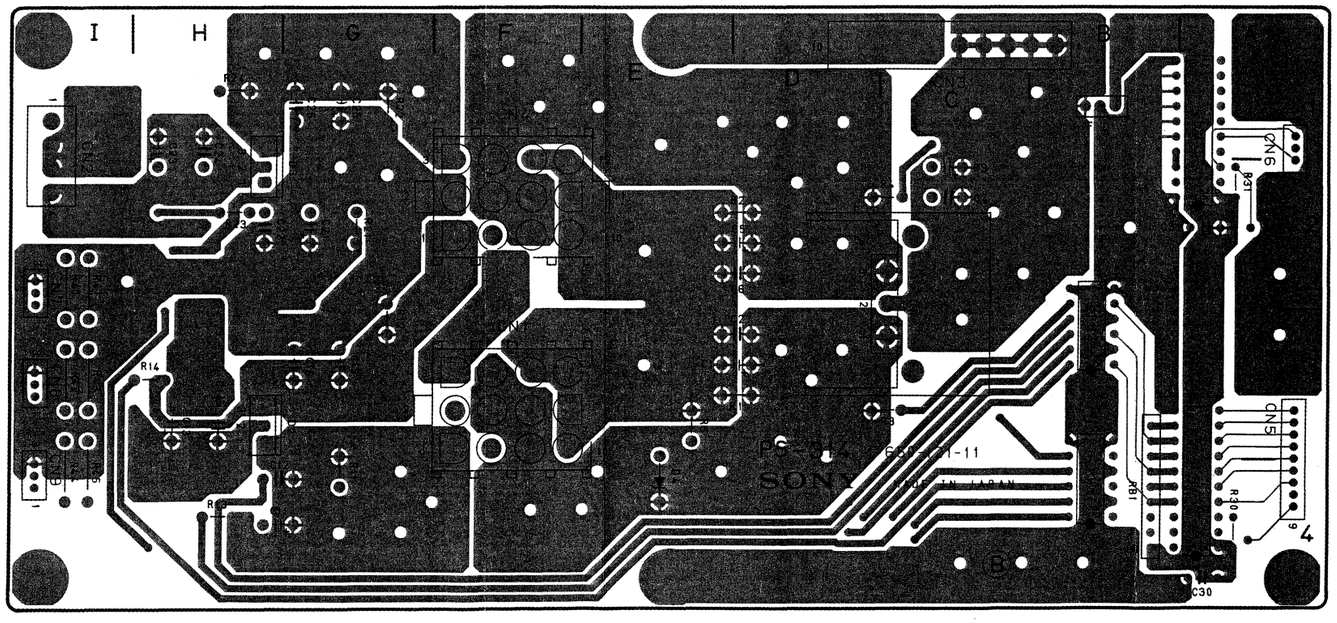

1-650-121-11

3-53

3-4. OPTIONAL ACCESSORIES

DMBK-4001

CN-842

A (Component) Side

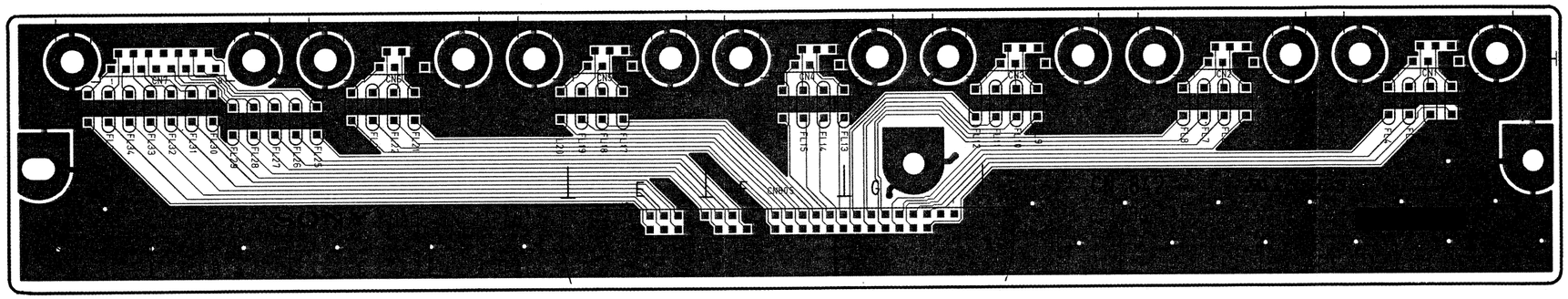

1-651-884-11

CN-842 BOARD
1-651-884-11

CN1 L-2
CN2 L-2
CN3 L-2
CN4 L-2
CN5 L-2
CN6 L-2
CN7 L-2
CN805 L-3

B (Soldering) Side

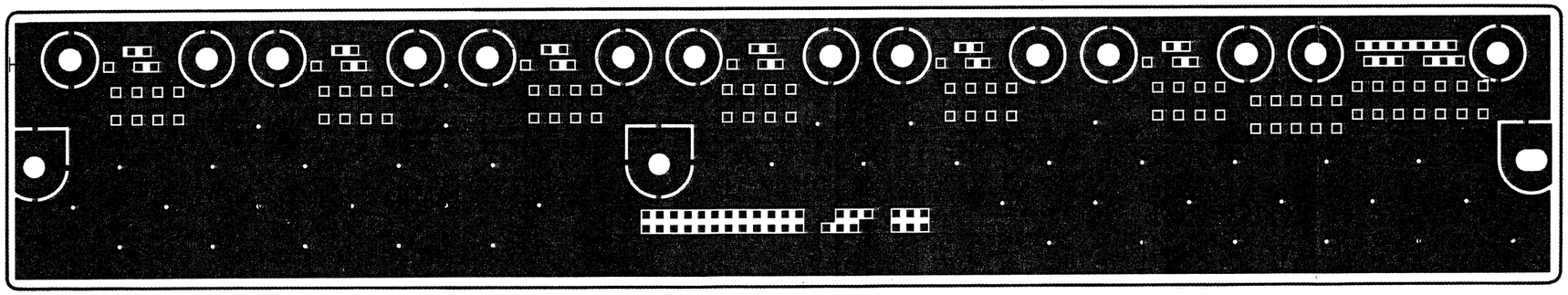

1-651-884-11

3-55

CPU-146
DMBK-4001 (OPTION)

CPU-146

CPU-146 BOARD
1-651-882-11

CN1	L-6
CN2	M-7
CN800	M-1
CN801	C-1
CN802	J-1
CN803	*A-9
D101	H-4
D102	H-4
D103	L-12
D104	L-11
D105	L-11
D106	L-11
D107	L-10
D108	L-10
D201	A-3
D301	L-12
D302	L-12
D303	K-12
D304	K-12
D305	K-12
D306	J-12
D307	J-12
D308	J-12
E1	M-1
E2	M-11
E3	A-1
IC101	K-6
IC102	L-7
IC103	J-4
IC104	H-4
IC105	G-4
IC106	K-9
IC107	K-8
IC108	L-5
IC109	K-4
IC110	H-9
IC111	D-6
IC112	E-4
IC113	E-5
IC114	J-7
IC115	F-6
IC116	K-11
IC201	F-2
IC202	E-3
IC203	C-7
IC204	B-7
IC205	C-5
IC206	B-5
IC207	A-4
IC301	G-5
IC302	G-5
IC303	H-7
IC304	G-6
IC305	H-10
IC306	K-10
IC307	J-8
IC308	G-8
IC309	F-9
IC310	G-9
IC311	H-8
IC312	G-10
IC313	J-11
IC314	J-9
IC315	H-11
IC401	B-3
IC402	C-3
IC403	C-2
IC404	B-1
IC405	C-1
IC406	E-1
IC501	H-3
IC502	G-2
IC503	J-3
IC504	H-2
IC505	L-3
IC506	J-2
IC507	K-2
IC508	L-2
IC509	L-1
IC510	K-4
IC601	E-8
IC602	E-7
IC603	E-7
IC604	C-12
IC605	C-11
IC606	E-12
IC607	D-11
IC608	E-11
IC609	E-10
IC610	B-8
IC611	B-7
IC612	C-8
IC613	C-7
IC701	F-11
IC702	F-12
IC703	F-10
IC704	B-9
IC705	C-9
IC706	B-10
IC707	D-10
IC708	D-7
IC709	D-8
S101	K-4
S102	K-9
S103	F-7
S601	G-12

TP101	L-6
TP102	H-5
TP103	H-5
TP104	H-5
TP105	H-6
TP106	H-6
TP107	E-6
TP108	G-8
TP109	H-9
TP110	H-5
TP111	H-10
TP112	H-10
TP113	H-9
TP114	G-10
TP115	G-9
TP116	H-10
TP117	K-7
TP118	K-9
X101	K-6
X501	L-3

* : B (Soldering) Side mount

A (Component) Side

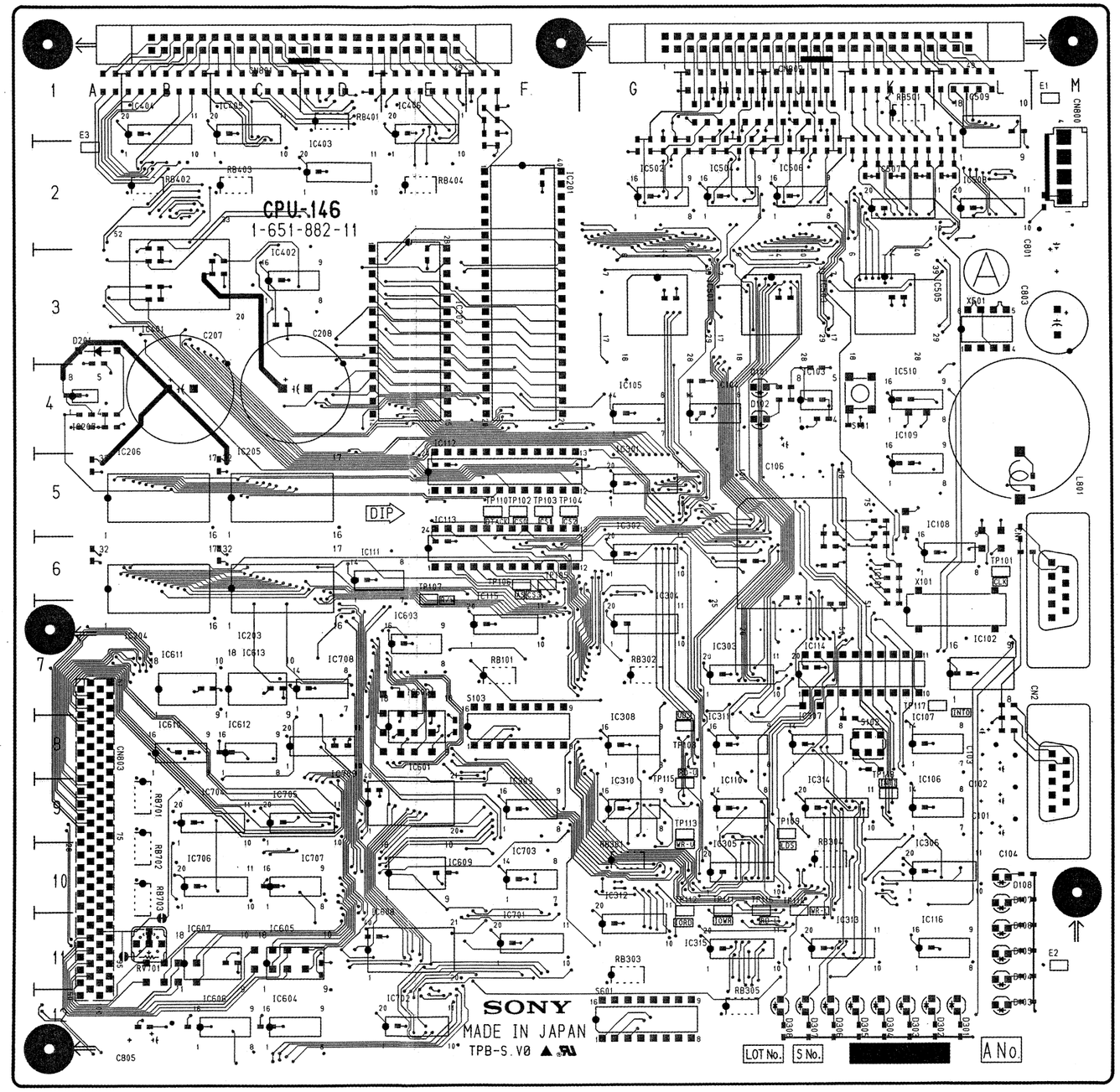

1-651-882-11

3-56

CPU-146
DMBK-4001 (OPTION)

CPU-146

B (Soldering) Side

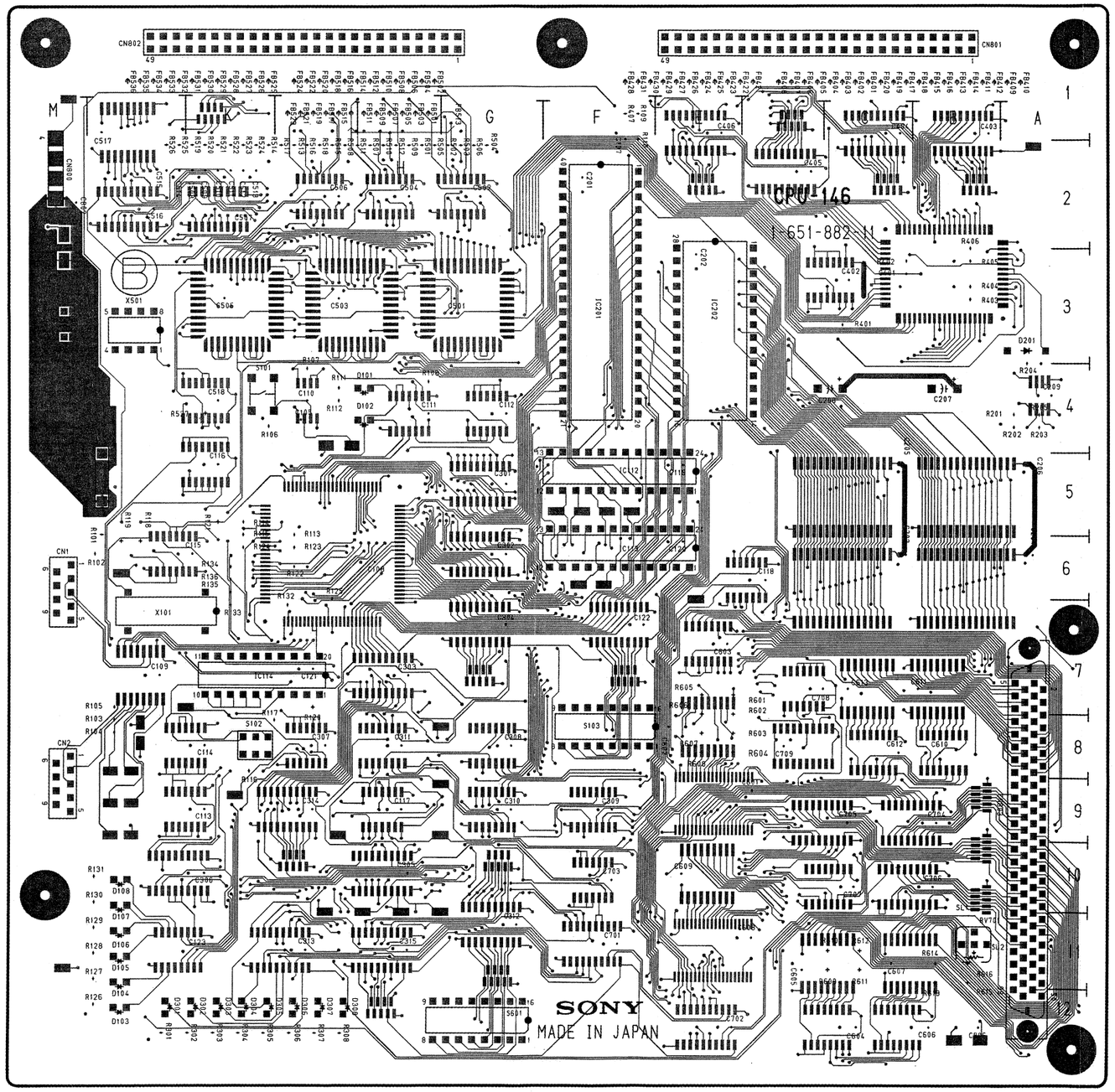

1-651-882-11

CPU-146 BOARD
1-651-882-11

CN1	L-6	TP101	L-6
CN2	M-7	TP102	F-5
CN600	M-1	TP103	F-5
CN801	C-1	TP104	F-5
CN802	J-1	TP105	F-6
CN803	*A-9	TP106	F-6
		TP107	E-6
D101	H-4	TP108	G-6
D102	H-4	TP109	J-6
D103	L-12	TP110	F-5
D104	L-11	TP111	H-10
D105	L-11	TP112	H-10
D106	L-11	TP113	H-9
D107	L-10	TP114	J-10
D108	L-10	TP115	G-9
D201	A-3	TP116	H-10
D301	L-12	TP117	K-7
D302	L-12	TP118	K-9
D303	K-12		
D304	K-12	X101	K-6
D305	K-12	X501	L-3
D306	J-12		
D307	J-12		
D308	J-12		

* : B (Soldering) Side mount

E1	M-1
E2	M-11
E3	A-1

IC101	K-6
IC102	L-7
IC103	J-4
IC104	H-4
IC105	G-4
IC106	K-9
IC107	K-8
IC108	L-5
IC109	K-4
IC110	H-9
IC111	D-6
IC112	E-4
IC113	E-5
IC114	J-7
IC115	F-6
IC116	K-11
IC201	F-2
IC202	F-3
IC203	C-7
IC204	B-7
IC205	D-5
IC206	B-5
IC207	A-4
IC301	G-5
IC302	G-5
IC303	H-7
IC304	G-6
IC305	H-10
IC306	K-10
IC307	J-8
IC308	G-8
IC309	F-9
IC310	G-9
IC311	H-8
IC312	G-10
IC313	J-11
IC314	J-9
IC315	H-11
IC401	B-3
IC402	C-3
IC403	D-2
IC404	B-1
IC405	C-1
IC406	E-1
IC501	H-3
IC502	G-2
IC503	J-3
IC504	H-2
IC505	L-3
IC506	J-2
IC507	K-2
IC508	L-2
IC509	K-1
IC510	K-4
IC601	E-8
IC602	E-7
IC603	E-7
IC604	C-12
IC605	C-11
IC606	C-12
IC607	B-11
IC608	E-11
IC609	E-10
IC610	B-8
IC611	B-7
IC612	C-8
IC613	C-7
IC701	F-11
IC702	E-12
IC703	F-10
IC704	B-9
IC705	C-9
IC706	B-10
IC707	D-10
IC708	D-7
IC709	D-8

S101	K-4
S102	K-8
S103	F-7
S601	G-12

3-57

KY-302

A (Component) Side

KY-302 BOARD
1-651-883-11

CN804	*K-9
CN806	A-3
CN807	F-3
CN808	J-10
D101	*C-1
D102	*E-1
D103	*H-2
D104	*G-4
D105	*A-8
D106	*C-8
D107	*F-8
D108	*B-9
D109	*D-9
D110	*F-9
D111	*J-7
D112	*A-10
D113	*D-10
D114	*F-10
D115	*J-4
D116	*J-3
D117	*H-2
D118	*J-2
D119	*J-1
D120	*J-4
D201	C-4
D202	D-4
D203	B-5
D204	C-5
D205	D-5
D206	E-6
D301	A-6
D302	A-6
D303	A-7
D304	A-7
D305	B-6
D306	B-6
D307	B-7
D308	B-7
D309	C-6
D310	C-6
D311	C-7
D312	C-7
D313	D-6
D314	D-6
D315	D-7
D316	D-7
D317	E-6
D318	E-6
D319	E-7
D320	E-7
D321	F-6
D322	F-6
D323	F-7
D324	F-7
D325	H-7
D326	H-7
D327	J-7
S1	B-1
S2	C-1
S3	D-1
S4	E-1
S5	G-1
S6	G-2
S7	G-3
S9	A-8
S10	B-8
S11	C-8
S12	D-8
S13	E-8
S14	F-8
S15	A-9
S16	B-9
S17	C-9
S18	D-9
S19	E-9
S20	H-7
S21	J-7
S22	A-10
S23	B-10
S24	C-10
S25	D-10
S26	E-10
S27	F-10
S28	J-5
S29	H-3
S30	J-3
S31	K-3
S32	H-2
S33	J-2
S34	K-2
S35	H-1
S36	J-1
S37	K-1
S38	K-5

* : B (Soldering) Side mount

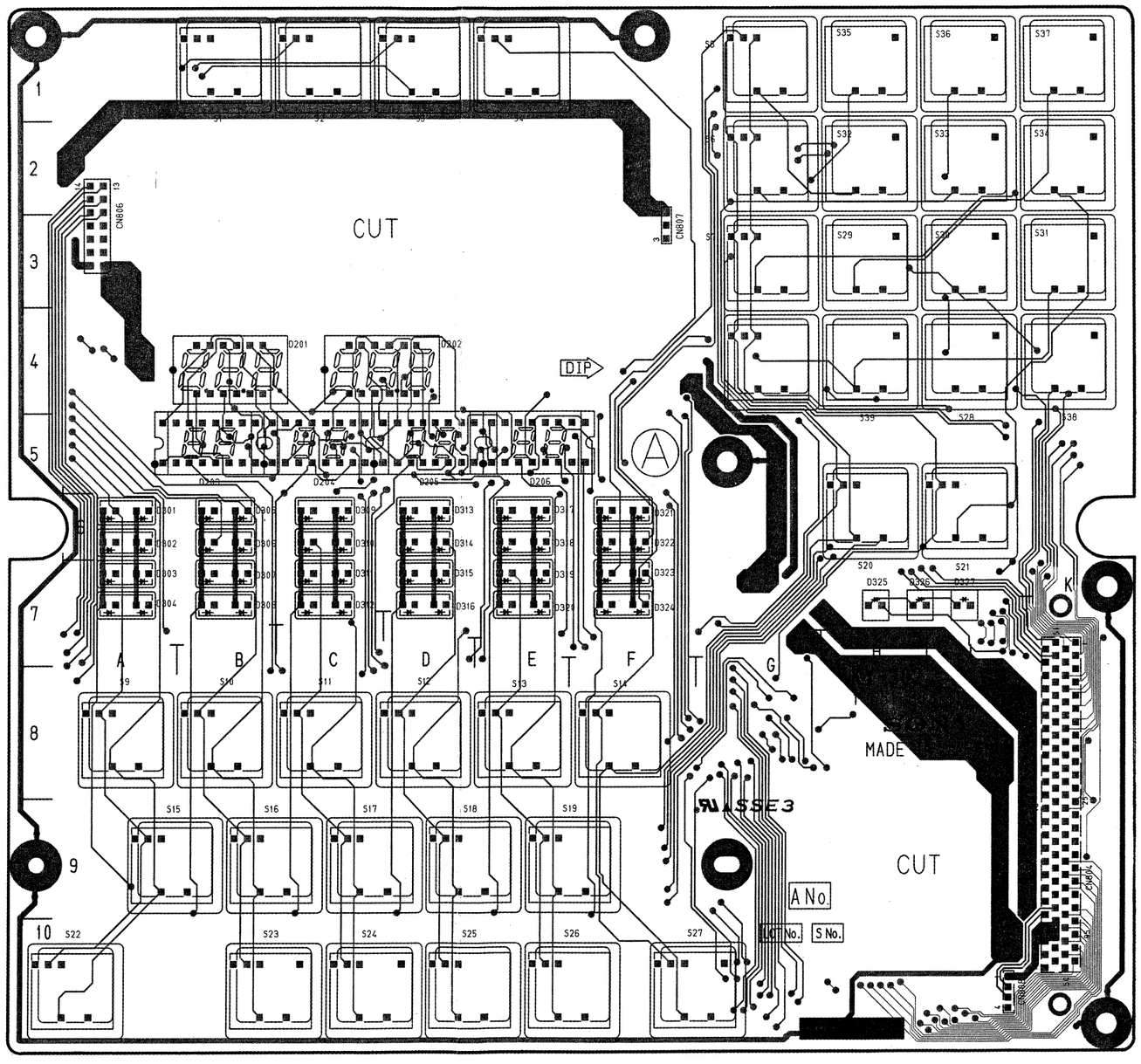

1-651-883-11

KY-302

B (Soldering) Side

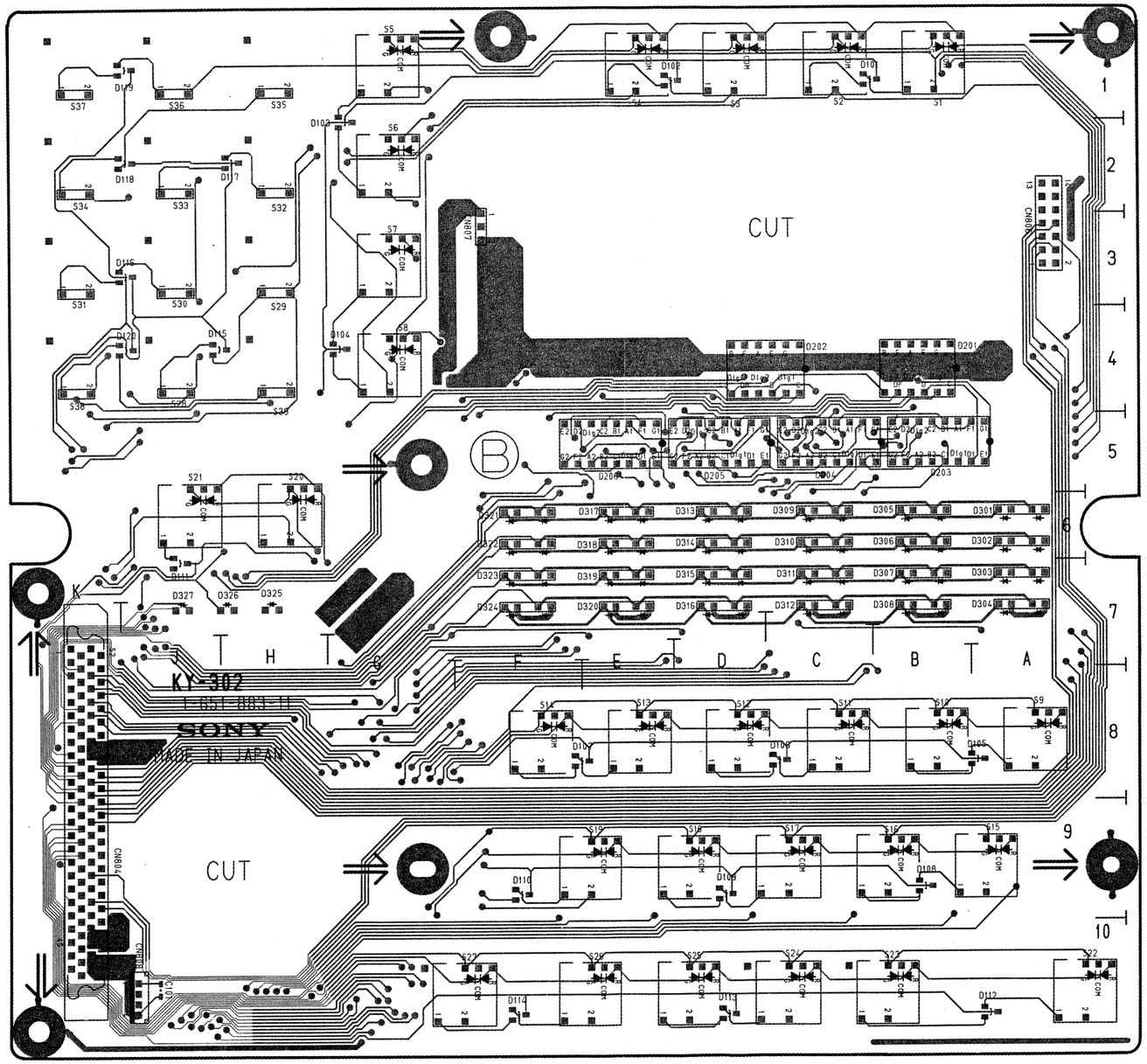

1-651-883-11

KY-302 BOARD
1-651-883-11

CN804	*K-9
CN806	A-3
CN807	F-2
CN808	J-10
D101	*C-1
D102	*E-1
D103	*H-2
D104	*G-4
D105	*A-8
D106	*C-8
D107	*F-8
D108	*B-9
D109	*D-9
D110	*F-9
D111	*J-7
D112	*A-10
D113	*D-10
D114	*F-10
D115	*J-4
D116	*J-3
D117	*H-2
D118	*J-2
D119	*J-1
D120	*J-4
D201	C-4
D202	D-4
D203	B-5
D204	C-5
D205	D-5
D206	E-6
D301	A-6
D302	A-5
D303	A-7
D304	A-7
D305	B-6
D306	B-6
D307	B-7
D308	B-7
D309	C-6
D310	C-6
D311	C-7
D312	C-7
D313	D-6
D314	D-6
D315	D-7
D316	D-7
D317	E-6
D318	E-6
D319	E-7
D320	E-7
D321	F-6
D322	F-6
D323	F-7
D324	F-7
D325	H-7
D326	H-7
D327	J-7
S1	B-1
S2	C-1
S3	D-1
S4	E-1
S5	G-1
S6	G-2
S7	G-3
S8	A-8
S9	B-8
S10	C-8
S11	D-8
S12	E-8
S13	F-8
S14	A-9
S15	B-9
S16	C-9
S17	D-9
S18	E-9
S19	H-7
S20	J-7
S21	A-10
S22	B-10
S23	C-10
S24	D-10
S25	E-10
S26	F-10
S27	J-5
S28	J-3
S29	K-3
S30	H-2
S31	J-2
S32	K-2
S33	H-1
S34	J-1
S35	K-1
S36	K-5
S37	
S38	

* : B (Soldering) Side mount

DMBK-4003

MT-94

A (Component) Side

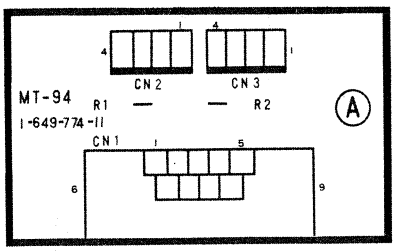

1-649-774-11

B (Soldering) Side

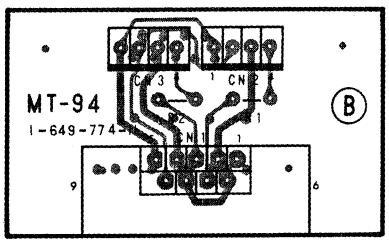

1-649-774-11

DMBK-4012
SW-602

A (Component) Side

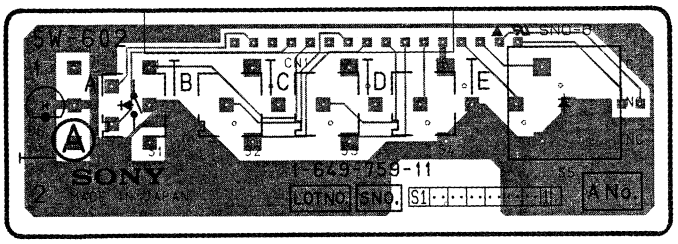

1-649-759-11

SW-602 BOARD
1-649-759-11

CN1	A-1
D6	A-1
S1	A-1
S2	A-1
S3	A-1
S4	B-1
S5	B-1

B (Soldering) Side

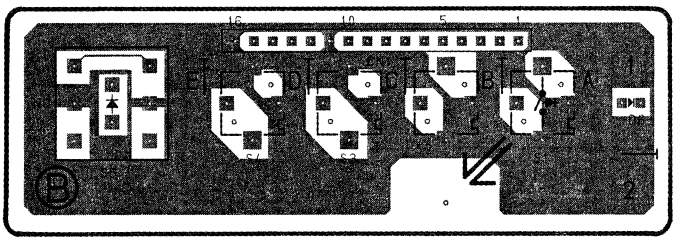

1-649-759-11

VR-163

A (Component) Side

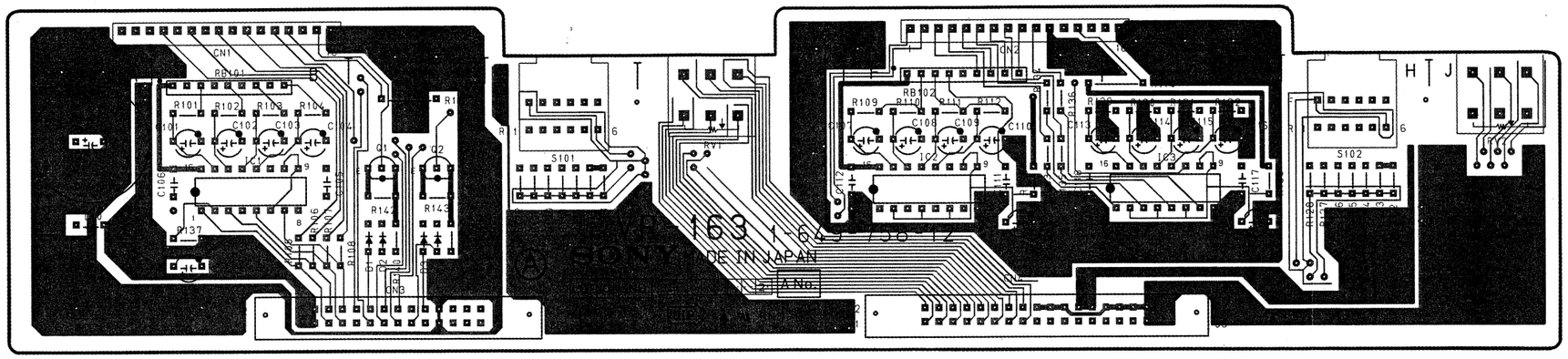

1-649-758-11, 12

VR-163 BOARD
1-649-758-11, 12

CN3	C-3
CN4	F-3
D1	C-3
D2	C-3
D3	C-3
D4	C-3
D10	A-2
IC1	B-2
IC2	G-2
IC3	F-2
Q1	C-2
Q2	C-2

B (Soldering) Side

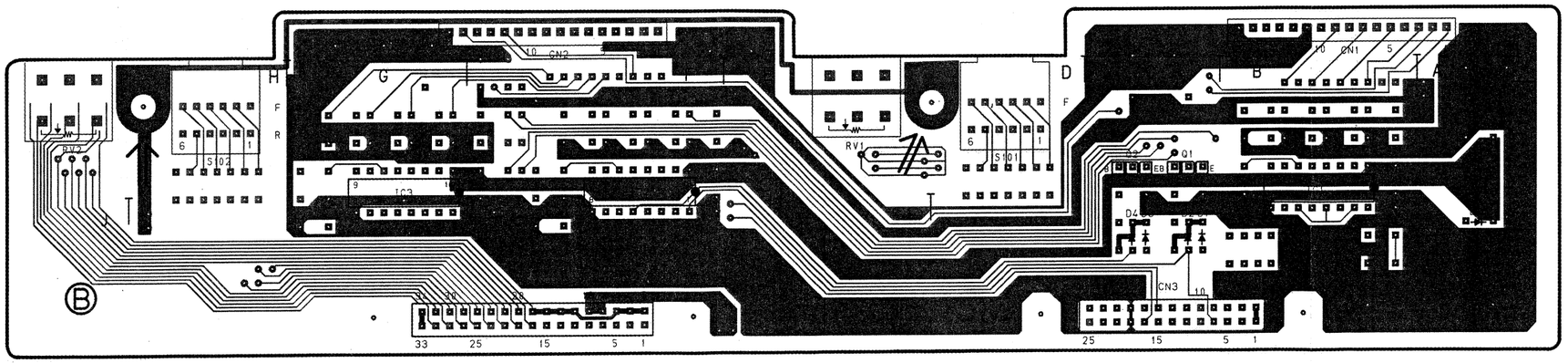

1-649-758-11, 12

3-63

AD-100
DMBK-4012 (OPTION)

AD-100
DMBK-4012 (OPTION)

S/N 10001 to 10095

AD-100

A (Component) Side

AD-100 BOARD
1-649-757-11

CN301	H-15	IC401	N-13
CN302	C-15	IC402	N-14
CN611	O-13	IC403	N-14
CN701	A-2	IC404	O-13
CN702	C-2	IC405	L-14
CN703	D-2	IC406	M-14
CN704	F-2	IC407	M-13
CN705	G-2	IC409	M-13
CN706	H-2	IC501	G-4
CN707	J-1	IC502	G-10
CN708	K-2	IC503	H-5
CN709	N-1	IC504	K-5
CN710	N-1	IC505	I-4
CN711	K-15	IC506	E-11
CN712	N-15	IC507	F-7
CN715	I-15	IC508	M-4
		IC509	F-14
DD301	F-13	IC510	F-12
		IC511	F-9
D1	*I-12	IC512	G-9
D2	*H-10	IC513	M-5
D3	*M-7	IC601	N-4
D4	*K-12	IC602	N-6
D5	*L-12	IC603	M-9
D6	*L-12	IC604	L-10
D7	*N-3	IC605	M-6
D8	*N-2	IC606	M-11
D101	*I-5		
D102	*K-6	Q101	J-6
D201	*I-5	Q102	J-6
D202	*I-6	Q103	K-6
D301	*B-4	Q201	I-6
D302	*B-4	Q202	K-6
D303	*A-4	Q203	L-6
D304	*B-4	Q301	E-8
D305	*E-7	Q302	M-2
D306	*D-3	Q303	N-15
D307	*E-3	Q304	N-15
D308	*C-3	Q305	C-10
D309	*C-2	Q501	H-10
D310	*C-4	Q503	N-14
D311	*B-4	Q504	N-14
D312	*C-4	Q505	N-7
D313	*C-4		
D314	*C-11	RL301	E-7
D315	*B-11	RL302	E-10
D316	*E-4	RL501	H-8
D317	*E-3	RL502	F-6
D318	*E-3		
D319	*F-4	RV101	I-7
D320	D-13	RV102	I-11
D321	D-12	RV201	K-8
D322	D-13	RV202	I-14
D323	D-12	RV301	B-3
D324	*I-2	RV302	A-3
D325	*L-2	RV303	C-12
D326	*L-2	RV304	D-5
D327	*L-2	RV305	C-5
D328	*D-10	RV306	B-11
D401	M-15	RV307	E-5
D402	M-14	RV501	G-3
D501	*G-4	RV502	F-3
D502	*G-4	RV503	F-11
D503	*F-4	RV504	I-5
D504	*G-4	RV505	H-6
D505	*H-9	RV506	E-11
D506	*J-3	RV507	J-5
D507	*I-4		
D508	*H-3	SW601	L-11
D509	*I-2	SW602	L-8
D510	*H-3	SW603	K-9
D511	*H-4	SW604	K-10
D512	*H-4		
D513	*H-3	S1	M-7
D514	*F-11	S2	O-12
D515	*E-11		
D516	*J-3	TP1	K-11
D517	*J-4	TP2	M-8
D518	*K-3	TP101	J-11
D519	*K-3	TP102	J-11
D520	F-13	TP103	J-8
D521	E-12	TP201	K-8
D522	F-13	TP202	J-13
D523	F-12	TP203	K-13
D524	*M-2	TP301	B-5
D525	*M-2	TP302	B-9
D526	*N-2	TP303	D-6
D527	*N-2	TP304	C-6
D528	*G-7	TP305	D-5
D601	*K-11	TP401	N-12
		TP402	L-12
E301	D-6	TP403	N-12
E302	M-6	TP404	N-12
E401	K-14	TP405	N-12
E501	E-6	TP406	K-13
E502	I-10	TP407	K-14
E503	G-3	TP408	K-14
		TP409	K-14
IC1	J-9	TP410	K-14
IC2	K-12	TP411	K-12
IC3	H-12	TP501	G-6
IC4	H-10	TP502	E-9
IC6	K-10	TP503	I-6
IC101	K-7	TP504	H-6
IC102	J-12	TP505	I-5
IC103	I-11		
IC110	M-11	X401	N-13
IC111	N-3	X601	N-7
IC201	L-7		
IC202	I-15		
IC203	I-13		
IC301	A-4		
IC302	D-10		
IC303	C-5		
IC304	F-5		
IC305	D-4		
IC306	B-11		
IC307	D-7		
IC308	L-4		
IC309	E-14		
IC310	E-13		
IC311	B-9		
IC312	D-9		
IC313	L-5		

* : B (Soldering) Side mount

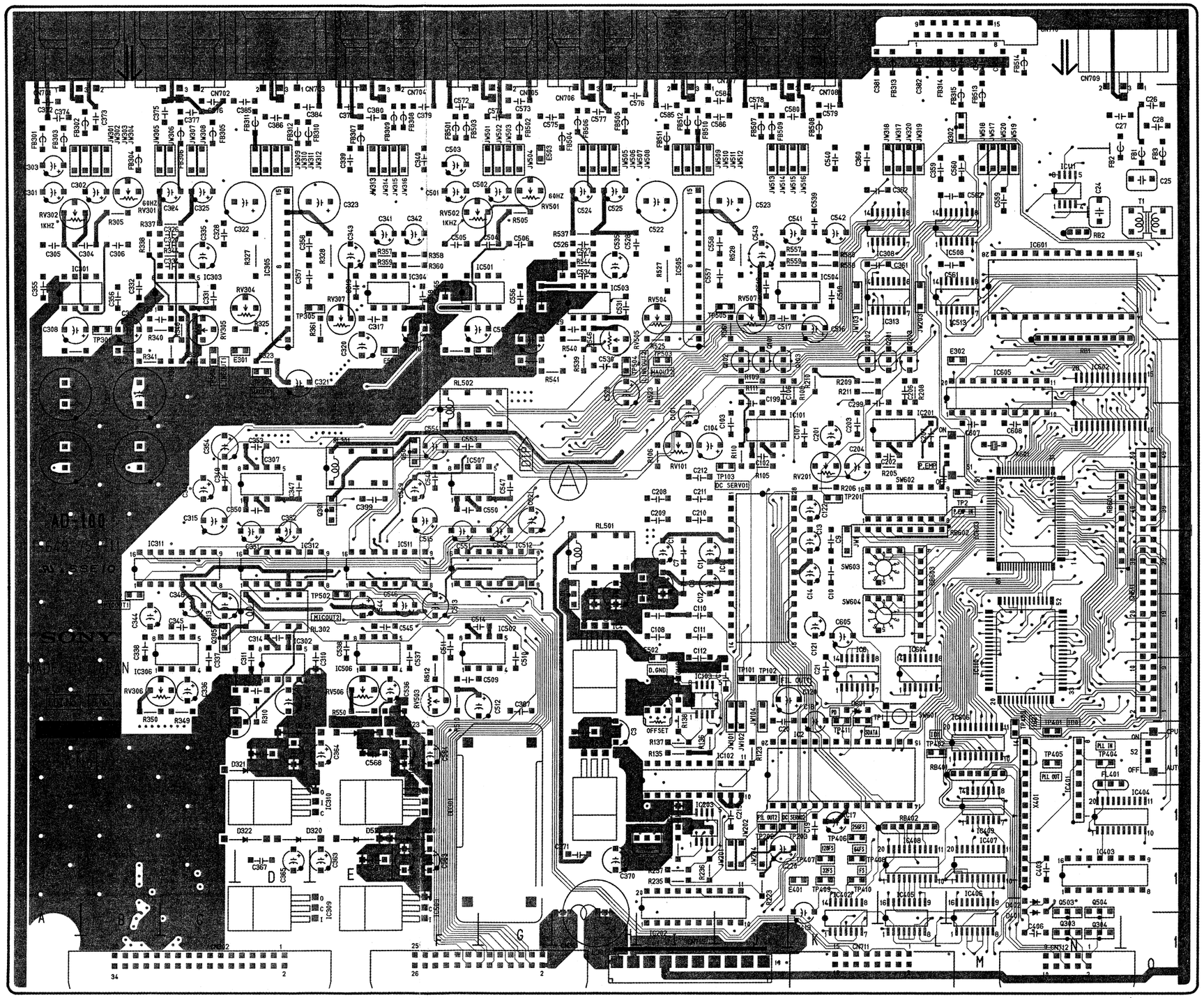

AD-100
DMBK-4012 (OPTION)

AD-100

S/N 10001 to 10095

B (Soldering) Side

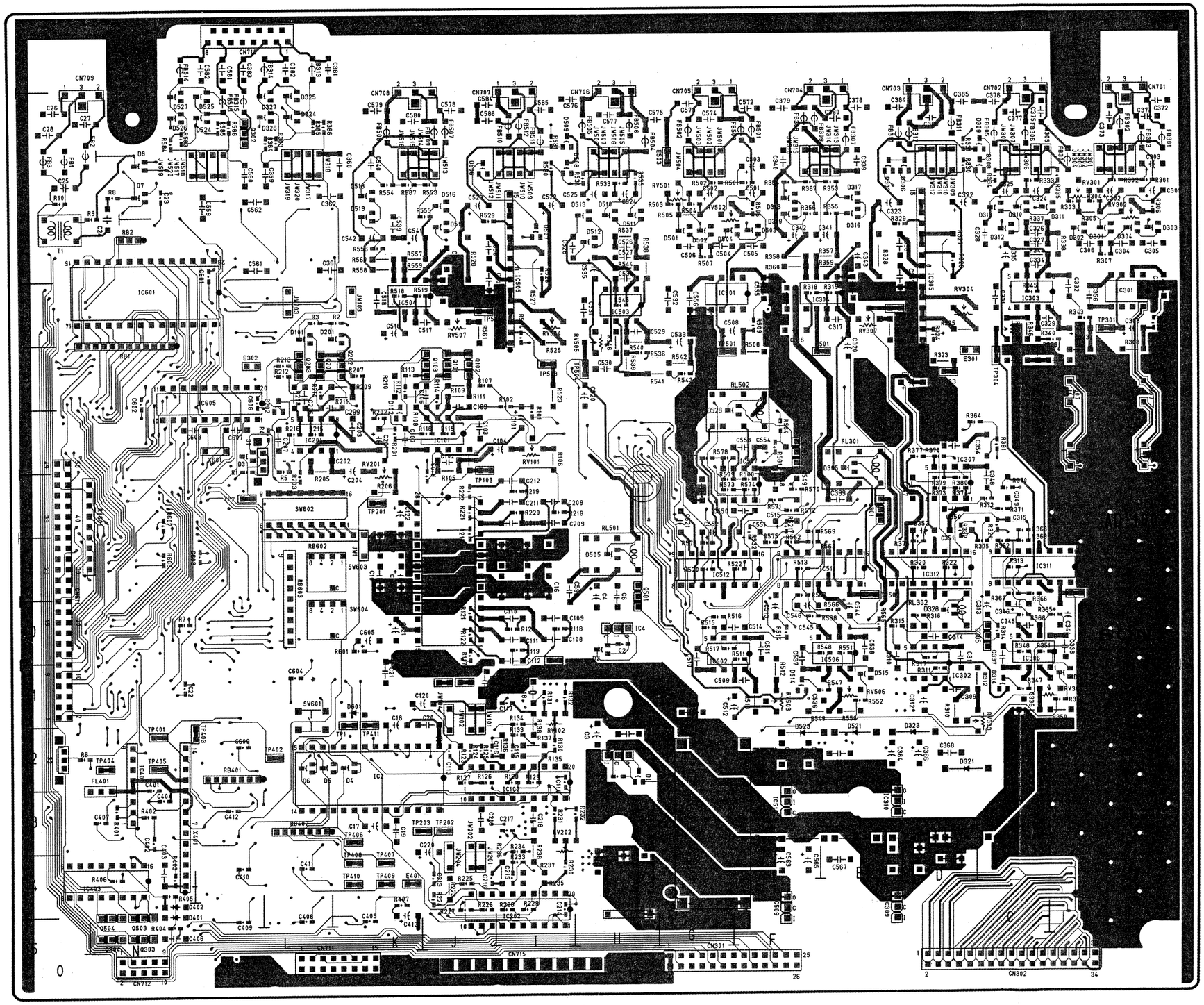

AD-100 BOARD
1-649-757-11

CN301	H-15	IC401	N-13
CN302	C-15	IC402	K-14
CN611	G-10	IC403	N-14
CN701	A-2	IC404	O-13
CN702	C-2	IC405	L-14
CN703	D-2	IC406	M-14
CN704	E-2	IC407	M-13
CN705	G-2	IC409	M-13
CN706	H-2	IC501	G-4
CN707	J-2	IC502	G-10
CN708	K-2	IC503	H-5
CN709	N-1	IC504	K-5
CN710	N-1	IC505	I-4
CN711	K-15	IC506	E-11
CN712	N-15	IC507	F-7
CN715	I-15	IC508	M-4
		IC509	F-14
DD301	F-13	IC510	F-12
		IC511	F-9
D1	*H-12	IC512	G-9
D2	*H-10	IC513	M-5
D3	*M-7	IC601	N-4
D4	*K-12	IC602	N-6
D5	*L-12	IC603	M-6
D6	*L-12	IC604	L-10
D7	*N-3	IC605	M-6
D8	*N-2	IC606	M-11
D101	*I-5		
D102	*K-6	Q101	J-6
D201	*I-5	Q102	J-6
D202	*I-6	Q103	K-6
D301	*B-4	Q201	K-6
D302	*B-4	Q202	K-6
D303	*A-4	Q203	L-6
D304	*B-4	Q301	E-8
D305	*E-7	Q302	M-2
D306	*D-3	Q303	N-15
D307	*E-3	Q304	N-15
D308	*C-3	Q305	C-10
D309	*C-2	Q501	H-10
D310	*C-4	Q503	N-14
D311	*B-4	Q504	N-14
D312	*C-4	Q505	F-7
D313	*C-4		
D314	*C-11	RL301	E-7
D315	*B-11	RL302	E-10
D316	*E-4	RL501	H-8
D317	*E-3	RL502	F-6
D318	*E-3		
D319	*F-4	RV101	I-7
D320	D-13	RV102	I-11
D321	D-12	RV201	K-8
D322	D-13	RV202	I-14
D323	D-12	RV301	B-3
D324	*I-2	RV302	A-3
D325	*I-2	RV303	C-12
D326	*I-2	RV304	D-5
D327	*I-2	RV305	C-5
D328	*D-10	RV306	B-11
D401	M-15	RV307	E-5
D402	M-14	RV501	G-3
D501	*G-4	RV502	F-3
D502	*G-4	RV503	F-11
D503	*F-4	RV504	I-5
D504	*G-4	RV505	H-6
D505	*H-9	RV506	E-11
D506	*H-3	RV507	J-5
D507	*I-4		
D508	*H-3	SW601	L-11
D509	*I-2	SW602	L-8
D510	*H-3	SW603	K-9
D511	*H-4	SW604	K-10
D512	*H-4		
D513	*H-3	S1	M-7
D514	*F-11	S2	O-12
D515	*E-11		
D516	*J-3	TP1	K-11
D517	*J-4	TP2	M-8
D518	*K-3	TP101	J-11
D519	*K-3	TP102	J-11
D520	F-13	TP103	J-8
D521	E-12	TP201	K-8
D522	E-13	TP202	J-13
D523	F-12	TP203	K-13
D524	*M-2	TP301	B-5
D525	*M-2	TP302	B-9
D526	*N-2	TP303	D-6
D527	*N-2	TP304	C-6
D528	*G-7	TP305	D-5
D601	*K-11	TP401	N-12
		TP402	L-12
E301	D-6	TP403	N-12
E302	M-6	TP404	N-12
E401	K-14	TP405	N-12
E501	E-6	TP406	K-13
E502	I-10	TP407	K-14
E503	G-3	TP408	K-14
		TP409	K-14
IC1	J-9	TP410	K-14
IC2	K-12	TP411	K-12
IC3	H-12	TP501	G-6
IC4	H-10	TP502	E-9
IC6	K-10	TP503	I-6
IC101	K-7	TP504	H-6
IC102	J-12	TP505	I-5
IC103	I-11		
IC110	M-11	X401	N-13
IC111	N-3	X601	N-7
IC201	L-7		
IC202	I-15		
IC203	I-13		
IC301	A-4		
IC302	D-10		
IC303	C-5		
IC304	C-5		
IC305	D-4		
IC306	B-11		
IC307	D-7		
IC308	L-4		
IC309	E-14		
IC310	E-13		
IC311	B-9		
IC312	D-9		
IC313	L-5		

* : B (Soldering) Side mount

AD-100

A (Component) Side

AD-100 BOARD
1-649-757-12

CN301	G-15	IC401	P-13
CN302	C-15	IC402	L-15
CN611	Q-9	IC403	P-14
CN701	A-1	IC404	Q-13
CN702	B-1	IC405	M-14
CN703	F-2	IC406	N-14
CN704	F-1	IC407	N-13
CN705	G-1	IC408	M-13
CN706	H-1	IC409	N-13
CN707	K-2	IC501	G-4
CN708	L-1	IC502	G-10
CN709	P-2	IC503	H-5
CN710	P-1	IC504	L-5
CN711	L-15	IC505	J-4
CN712	P-15	IC506	E-11
CN715	J-15	IC507	F-7
		IC508	N-4
DD301	F-13	IC509	F-14
		IC510	F-13
D1	*H-12	IC511	F-9
D2	*H-10	IC512	G-9
D3	*N-7	IC513	N-5
D4	*L-12	IC601	P-4
D5	*M-12	IC602	P-6
D6	*M-12	IC603	N-9
D7	*P-3	IC604	M-10
D8	*P-3	IC605	N-6
D101	*M-5	IC606	N-11
D102	*L-7		
D201	*M-5	Q101	K-6
D202	*M-6	Q102	K-6
D301	*B-4	Q103	L-6
D302	*B-4	Q201	M-6
D303	*A-4	Q202	L-6
D304	*B-4	Q203	M-6
D305	*E-8	Q301	E-8
D306	*D-3	Q302	N-2
D307	*E-3	Q303	P-15
D308	*C-3	Q304	P-15
D309	*C-2	Q305	C-10
D310	*C-4	Q306	L-2
D311	*B-4	Q501	H-10
D312	*C-4	Q503	P-14
D313	*C-4	Q504	P-14
D314	*C-11	Q505	F-7
D315	*B-11	Q506	L-2
D316	*E-4		
D317	*E-3	RL301	E-7
D318	*F-3	RL302	E-10
D319	*F-4	RL501	H-9
D320	D-13	RL502	F-6
D321	D-12		
D322	D-13	RV101	J-7
D323	D-12	RV102	J-11
D324	*M-2	RV201	L-8
D325	*M-2	RV202	J-14
D326	*M-2	RV301	B-4
D327	*M-2	RV302	A-4
D328	*D-10	RV303	C-12
D401	P-15	RV304	D-5
D402	P-14	RV305	C-5
D501	*G-4	RV306	B-11
D502	*G-4	RV307	E-5
D503	*F-4	RV501	G-4
D504	*G-4	RV502	F-3
D505	*H-9	RV503	F-11
D506	*K-3	RV504	J-5
D507	*J-4	RV505	H-6
D508	*J-3	RV506	E-11
D509	*J-2	RV507	K-5
D510	*H-4		
D511	*H-4	SW601	M-11
D512	*H-4	SW602	M-8
D513	*H-3	SW603	L-9
D514	*F-11	SW604	L-10
D515	*E-11		
D516	*K-3	S1	N-7
D517	*K-4	S2	Q-12
D518	*K-3	S401	K-14
D519	*L-3		
D520	F-13	TP1	L-11
D521	E-12	TP2	N-8
D622	E-13	TP101	K-11
D523	F-12	TP102	K-11
D524	*N-2	TP103	K-8
D525	*N-1	TP201	L-8
D526	*P-2	TP202	K-13
D527	*P-1	TP203	L-13
D528	*G-6	TP301	B-6
D601	L-11	TP302	B-10
		TP303	D-6
E301	D-6	TP304	C-6
E302	N-6	TP305	E-5
E401	L-14	TP401	P-12
E501	E-6	TP402	M-12
E502	J-10	TP403	P-12
E503	G-3	TP404	P-12
		TP405	P-12
IC1	K-10	TP406	L-13
IC2	L-12	TP407	L-14
IC3	H-12	TP408	L-14
IC4	H-10	TP409	L-14
IC5	L-10	TP410	L-14
IC101	L-7	TP411	L-12
IC102	K-12	TP501	G-6
IC103	J-11	TP502	E-10
IC110	N-11	TP503	J-6
IC111	P-3	TP504	H-6
IC201	M-7	TP505	K-5
IC202	J-15		
IC203	J-13	X401	P-13
IC301	A-4	X601	P-7
IC302	D-10		
IC303	C-5		
IC304	E-5		
IC305	D-4		
IC306	B-11		
IC307	D-7		
IC308	M-4		
IC309	E-14		
IC310	E-13		
IC311	C-9		
IC312	D-9		
IC313	M-5		

* : B (Soldering) Side mount

S/N 10096 and higher

AD-100 DMBK-4012 (OPTION) **AD-100** DMBK-4012 (OPTION)

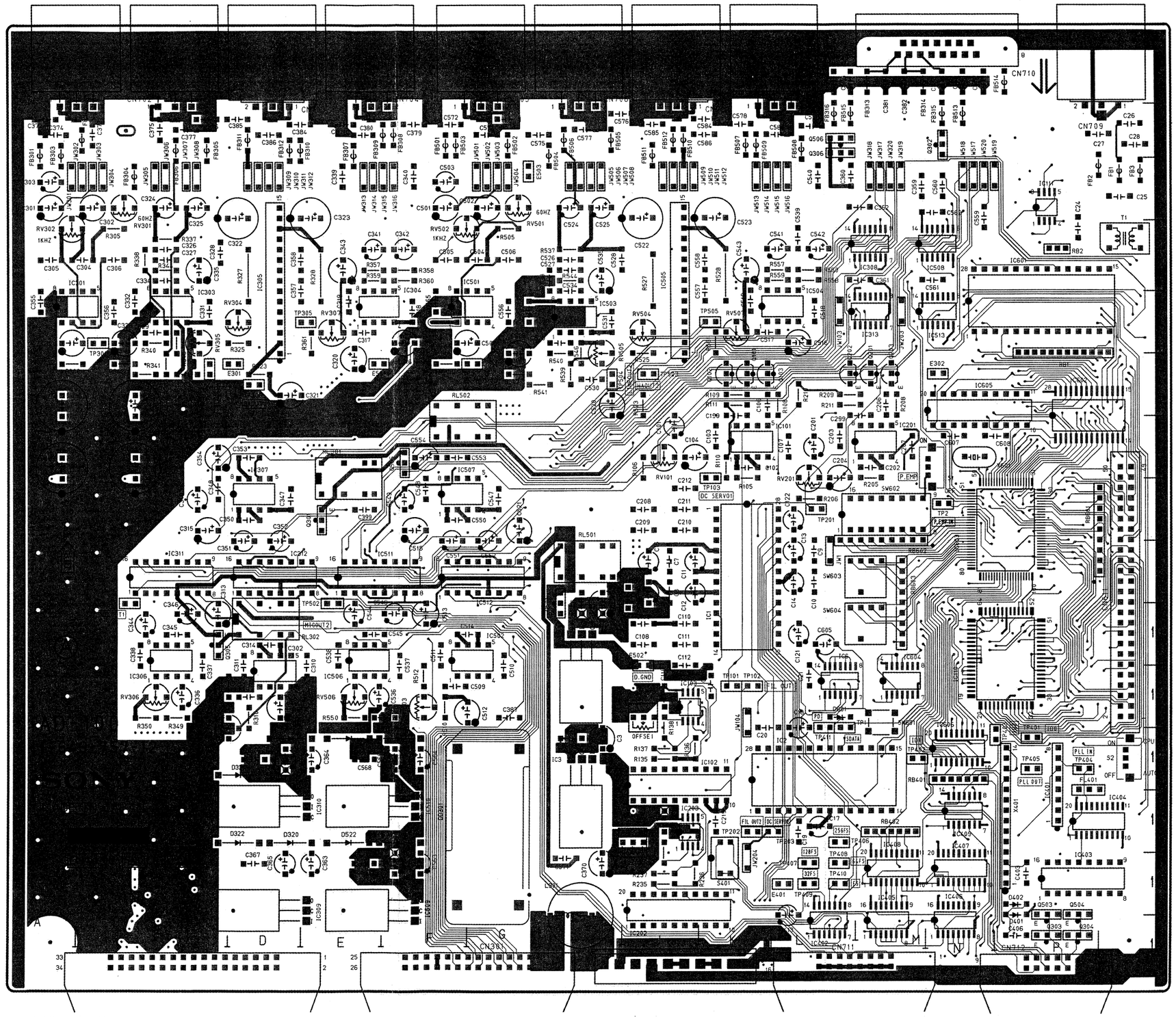

AD-100
DMBK-4012 (OPTION)

AD-100

B (Soldering) Side

S/N 10096 and higher

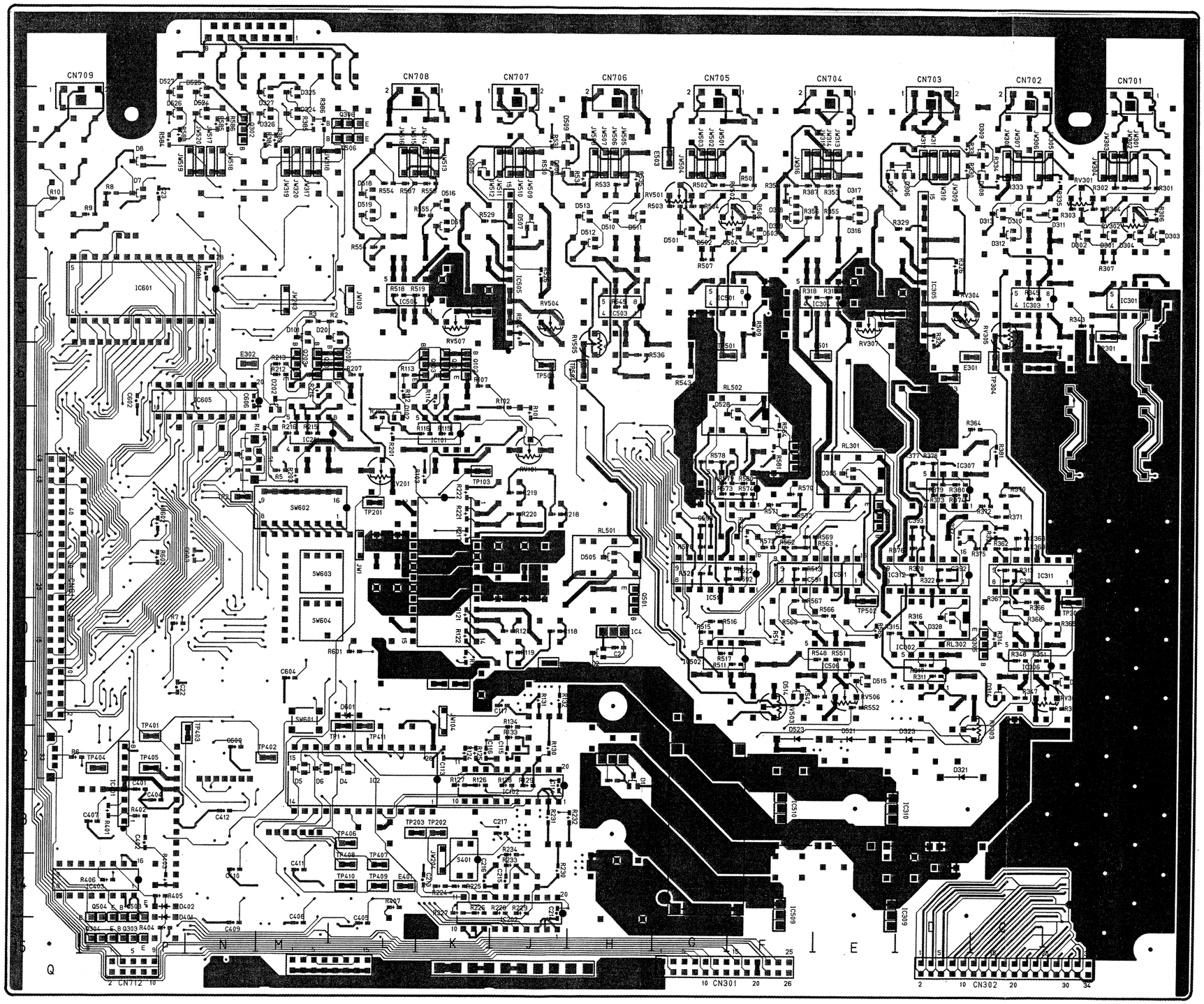

AD-100 BOARD
1-649-757-12

CN301	G-15	IC401	P-13
CN302	C-15	IC402	L-15
CN611	Q-9	IC403	P-14
CN701	A-1	IC404	Q-13
CN702	B-1	IC405	M-14
CN703	E-2	IC406	N-14
CN704	F-1	IC407	N-13
CN705	G-1	IC408	M-13
CN706	H-1	IC409	N-13
CN707	K-2	IC501	G-4
CN708	L-1	IC502	G-10
CN709	P-2	IC503	H-5
CN710	P-1	IC504	L-5
CN711	L-15	IC505	J-4
CN712	P-15	IC506	E-11
CN715	J-15	IC507	F-7
		IC508	N-4
DD301	F-13	IC509	F-14
		IC510	F-13
D1	*H-12	IC511	F-9
D2	*H-10	IC512	G-9
D3	*N-7	IC513	N-5
D4	*L-12	IC601	P-4
D5	*M-12	IC602	P-6
D6	*M-12	IC603	N-9
D7	*P-3	IC604	M-10
D8	*P-3	IC605	N-6
D101	*M-5	IC606	N-11
D102	*L-7		
D201	*M-5	Q101	K-6
D202	*M-6	Q102	K-6
D301	*B-4	Q103	L-6
D302	*B-4	Q201	M-6
D303	*A-4	Q202	L-6
D304	*B-4	Q203	M-6
D305	*E-8	Q301	E-8
D306	*E-3	Q302	N-2
D307	*E-3	Q303	P-15
D308	*C-3	Q304	P-15
D309	*C-4	Q305	C-10
D310	*C-4	Q306	L-2
D311	*B-4	Q501	H-10
D312	*C-4	Q503	P-14
D313	*C-4	Q504	P-14
D314	*G-11	Q505	F-7
D315	*B-11	Q506	L-2
D316	*E-4		
D317	*E-3	RL301	E-7
D318	*F-3	RL302	E-10
D319	*F-4	RL501	H-8
D320	D-13	RL502	F-6
D321	D-12		
D322	D-13	RV101	J-7
D323	D-12	RV102	J-11
D324	*M-2	RV201	L-8
D325	*M-2	RV202	J-14
D326	*M-2	RV301	B-4
D327	*M-2	RV302	A-4
D328	*D-10	RV303	C-12
D401	P-15	RV304	D-5
D402	P-14	RV305	C-5
D501	*G-4	RV306	B-11
D502	*G-4	RV307	E-5
D503	*F-4	RV501	E-4
D504	*G-4	RV502	F-3
D505	*H-9	RV503	F-11
D506	*H-9	RV504	J-5
D507	*K-3	RV505	H-6
D508	*J-4	RV506	E-11
D509	*J-3	RV507	K-5
D510	*J-2		
D511	*H-4	SW601	M-11
D512	*H-4	SW602	M-8
D513	*H-4	SW603	L-9
D514	*H-3	SW604	L-10
D515	*E-11		
D516	*K-3	S1	N-7
D517	*K-4	S2	Q-12
D518	*L-3	S401	K-14
D519	*L-3		
D520	F-13	TP1	L-11
D521	E-12	TP2	N-8
D522	E-13	TP101	K-11
D523	F-12	TP102	K-11
D524	*N-2	TP103	L-8
D525	*N-1	TP201	L-8
D526	*P-2	TP202	K-13
D527	*P-1	TP203	L-13
D528	*G-6	TP301	B-6
D601	L-11	TP302	B-10
		TP303	D-6
E301	D-6	TP304	C-6
E302	N-6	TP305	E-5
E401	L-14	TP401	P-12
E501	E-6	TP402	M-12
E502	J-10	TP403	P-12
E503	G-3	TP404	P-12
		TP405	P-12
IC1	K-10	TP406	L-13
IC2	L-12	TP407	L-14
IC3	H-12	TP408	L-14
IC4	H-10	TP409	L-14
IC5	L-10	TP410	L-14
IC101	L-7	TP411	L-12
IC102	K-12	TP501	G-6
IC103	J-11	TP502	E-10
IC110	N-11	TP503	J-5
IC111	P-3	TP504	H-6
IC201	M-7	TP505	K-5
IC202	J-15		
IC203	J-13	X401	P-13
IC301	A-4	X601	P-7
IC302	D-10		
IC303	C-5		
IC304	E-5		
IC305	D-4		
IC306	B-11		
IC307	D-7		
IC308	M-4		
IC309	E-14		
IC310	E-13		
IC311	C-9		
IC312	D-9		
IC313	M-5		

* : B (Soldering) Side mount

1-649-757-12

3-65 (b)

SECTION 4
SCHEMATIC DIAGRAMS

4-1. DMX-B4008/DMX-B4016 METER UNIT/CONSOLE

Board Name	Circuit Function	Page
CN-838	Connector Board	4-35
CN-839	Connector Board	4-36
CN-840A (for UC/EK)	Connector Board	4-37
CN-840B (for J)	Connector Board	4-37
CN-841	Connector Board	4-37
CPU-145 (for DMX-B4008)	Control Panel Host CPU Board	4-8
CPU-145A (for DMX-B4016)	Control Panel Host CPU Board	4-8
IF-413	GPI Interface Board	4-15
IF-414 (for DMX-B4008)	Channel CPU Board	4-2
IF-414A (for DMX-B4016)	Channel CPU Board	4-2
IF-421 *	Meter Driver Board	4-31
KY-225	Channel Switch Board	4-24
LED-156	Channel Status LED Board	4-27
MOA-7A (for UC/EK)	Analog Monitor Communication Board	4-19
MOA-7B (for J)	Analog Monitor Communication Board	4-19
MT-88 *	Meter LED Board	4-33
PS-312	Control Panel Power Mix Board	4-38
SW-604	PFL Switch Board	4-29
SW-605	Start/Stop Switch Board	4-30
SW-606	Monitor Control Switch Board	4-37
VR-165	Monitor Volume Board	4-37
CONSOLE/METER UNIT Frame Wiring	———	4-34

*: METER UNIT

4-2. DMX-B4008 PROCESSOR

Board Name	Circuit Function	Page
CN-833	Connector Board	4-63
CN-834	Connector Board	4-64
CN-835	Connector Board	4-65
CN-836	Connector Board	4-66
CN-837	Connector Board	4-67
CPU-164	Processor Rack CPU Board	4-39
DIO-26	Digital Input/Output Board	4-45
DP-131	Processor Rack Power LED	4-69
MB-481	Processor Rack Mother Board	4-60
MIX-15	Mixing Board	4-53
PS-313	Processor Rack Power Mix Board	4-69
PROCESSOR Frame Wiring	———	4-69

4-3. DMX-B4016 PROCESSOR

Board Name	Circuit Function
CN-827	Connector Board
CN-828A	Connector Board
CN-828B	Connector Board
CN-830	Connector Board
CN-831	Connector Board
CN-832A (for UC/EK)	Connector Board
CN-832B (for J)	Connector Board
CPU-144	Processor Rack CPU Board
IPM-48	Digital Input Board
DP-131	Processor Rack Power LED
MB-480	Processor Rack Mother Board
MIX-16	Mixing Board
PS-314	Processor Rack Power Mix Board
PROCESSOR Frame Wiring	———

4-4. OPTIONAL ACCESSORIES

Model Name	Board Name	Circuit Function
DMBK-4001	CN-842	Connector Board
	CPU-146	CPU Board
	KY-302	Switch Board
DMBK-4003	MT-94	Connector Board
DMBK-4007	DP-131	Processor Rack Power LED
DMBK-4010	IPM-48	Digital Input Board
	KY-225	Channel Switch Board
	LED-156	Channel Status LED Board
	MIX-16	Mixing Board
	SW-604	PFL Switch Board
	SW-605	Start/Stop Switch Board
DMBK-4011	MIX-16	Mixing Board
DMBK-4012	AD-100	Mic/Line Amp AD Converter
	SW-602	Switch Board
	VR-163	Volume Board

4-3. DMX-B4016 PROCESSOR

Board Name	Circuit Function	Page
CN-827	Connector Board	4-109
CN-828A	Connector Board	4-110
CN-828B	Connector Board	4-110
CN-830	Connector Board	4-111
CN-831	Connector Board	4-112
CN-832A (for UC/EK)	Connector Board	4-113
CN-832B (for J)	Connector Board	4-113
CPU-144	Processor Rack CPU Board	4-71
IPM-48	Digital Input Board	4-82
DP-131	Processor Rack Power LED	4-69
MB-480	Processor Rack Mother Board	4-106
MIX-16	Mixing Board	4-93
PS-314	Processor Rack Power Mix Board	4-115
PROCESSOR Frame Wiring	———	4-115

4-4. OPTIONAL ACCESSORIES

Model Name	Board Name	Circuit Function	Page
DMBK-4001	CN-842	Connector Board	4-128
	CPU-146	CPU Board	4-119
	KY-302	Switch Board	4-126
DMBK-4003	MT-94	Connector Board	4-36
DMBK-4007	DP-131	Processor Rack Power LED	4-69
DMBK-4010	IPM-48	Digital Input Board	4-82
	KY-225	Channel Switch Board	4-24
	LED-156	Channel Status LED Board	4-27
	MIX-16	Mixing Board	4-93
	SW-604	PFL Switch Board	4-29
	SW-605	Start/Stop Switch Board	4-30
DMBK-4011	MIX-16	Mixing Board	4-93
DMBK-4012	AD-100	Mic/Line Amp AD Converter	4-129
	SW-602	Switch Board	4-133
	VR-163	Volume Board	4-133

IF-414/414A (1/6)
DMX-B4008/B4016 CONSOLE

4-1. DMX-B4008/4016 METER UNIT/CONSOLE

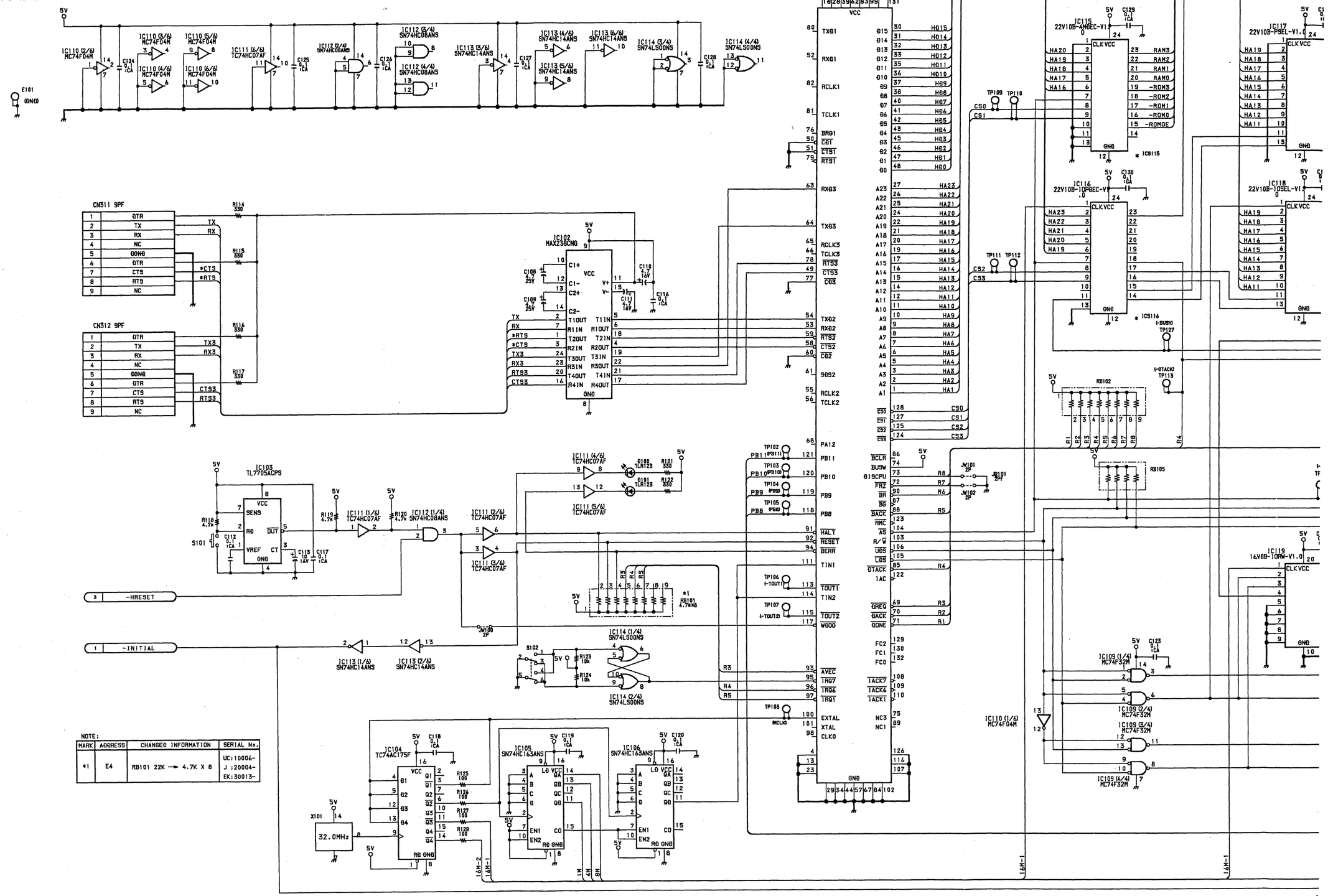

NOTE:

MARK	ADDRESS	CHANGED INFORMATION	SERIAL No.
*1	E4	RB101 22K → 4.7K X 8	UC:10006- J :20004- EK:30013-

IF-414/414A (1/6)
DMX-B4008/B4016 CONSOLE

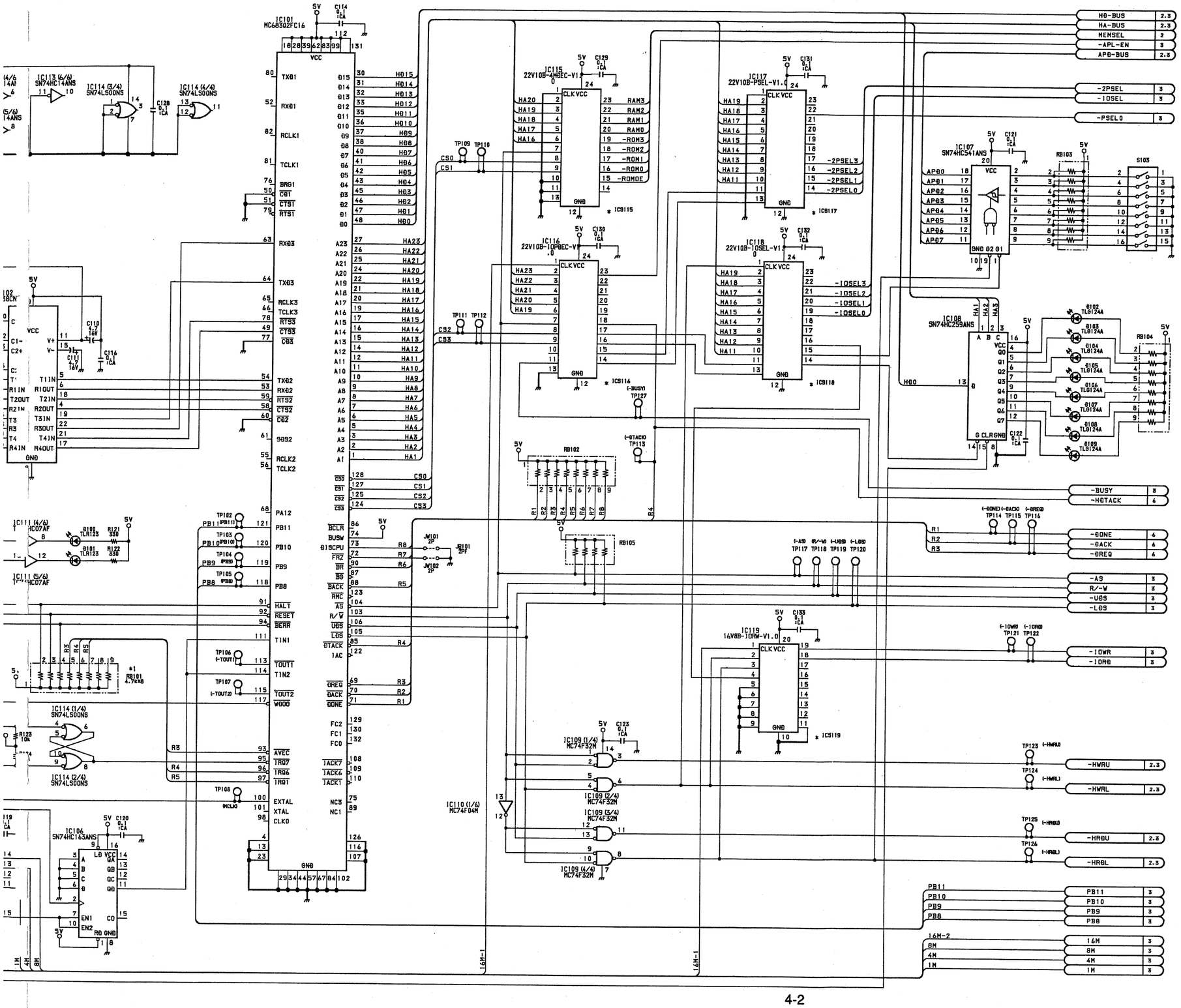

Channel CPU

IF-414 (for DMX-B4008)

IF-414A (for DMX-B4016) BOARD (1/6)

BOARD NO. 1-649-749-11
DMX-B4008/B4016

E F G H I J K L

IF-414/414A (2/6)
DMX-B4008/B4016 CONSOLE

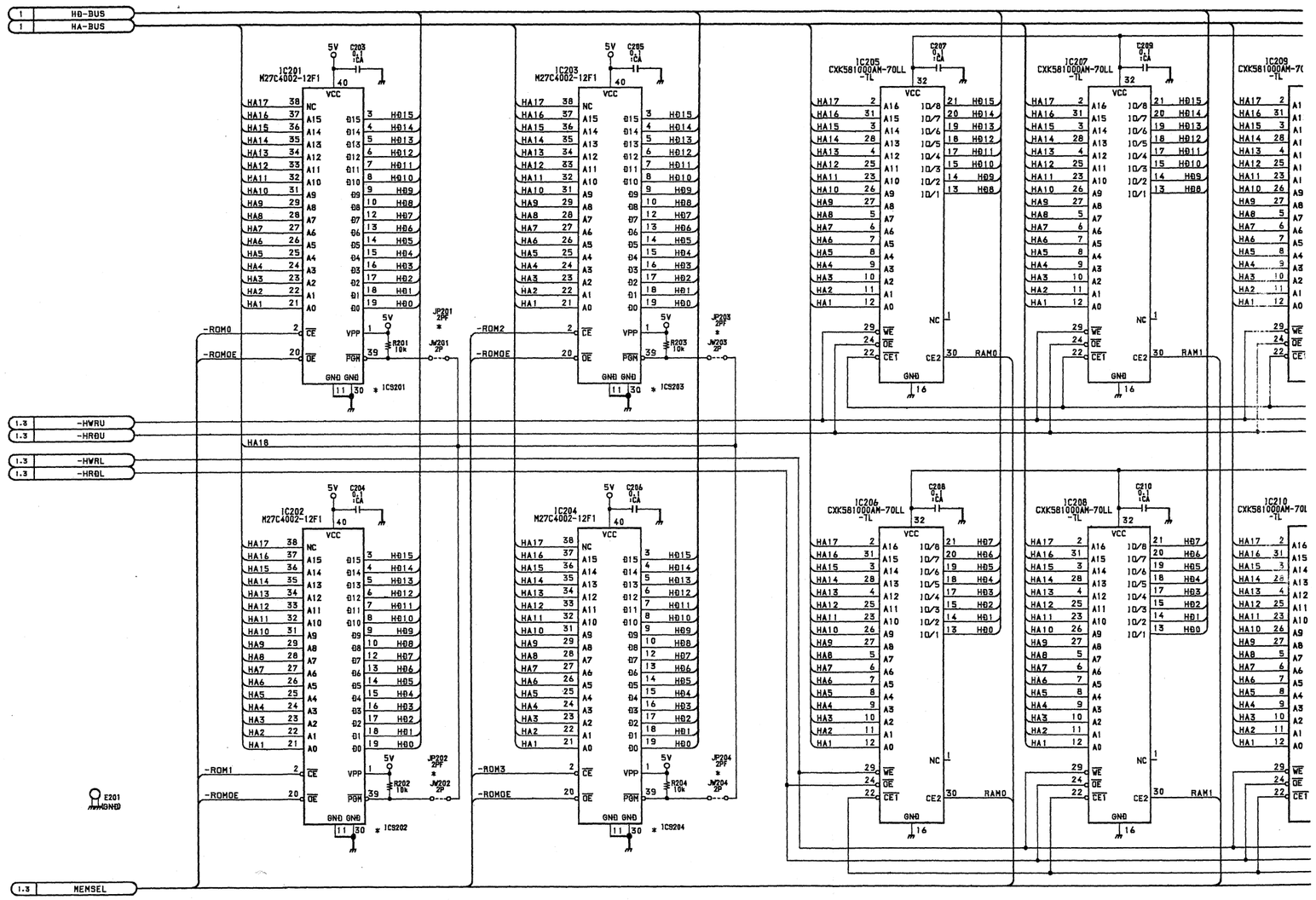

NOTE: 1) DIFFERENCE OF IF-414/414A MOUNT

IC201.	IC202.
IF414 (DMX-B4008) :27C4002-PNLAPL-VX.XX	IF414 (DMX-B4008) :27C4002-PNLDATA-VX.XX
IF414A (DMX-B4016) :27C4002-ELAP16-VX.XX	IF414A (DMX-B4016) :27C4002-ELDT16-VX.XX

VX.XX:Version No.

A B C D E F G H

IF-414/414A (2/6)
DMX-B4008/B4016 CONSOLE

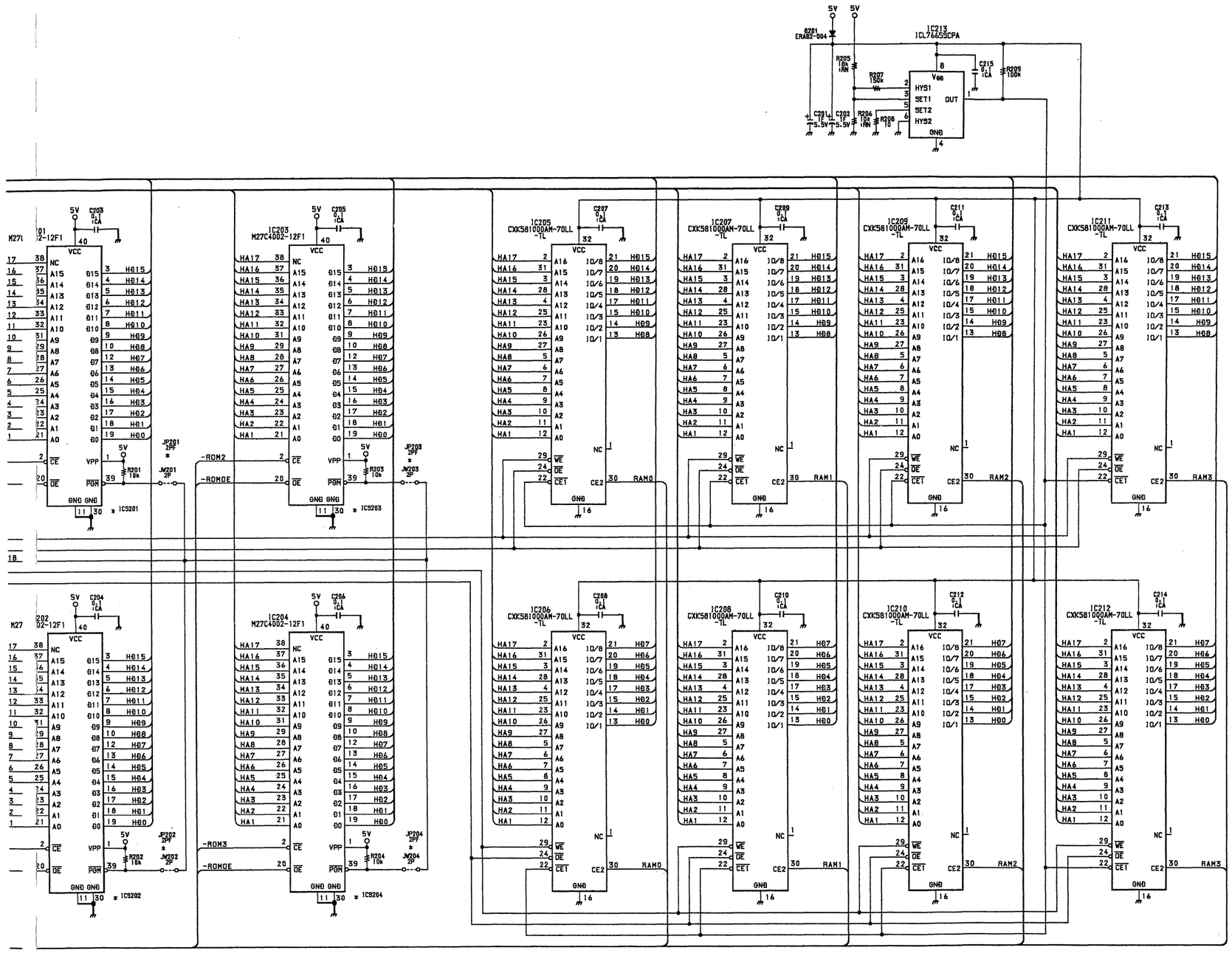

Channel CPU
IF-414 (for DMX-B4008)
IF-414A (for DMX-B4016) BOARD (2/6)

BOARD NO. 1-649-749-11
DMX-B4008/B4016

FER[illegible] OF IF-414/414A MOUNT

01.	IC202.
14 ([illegible]-B4008) :27C4002-PNLAPL-VX.XX	IF414 (DMX-B4008) :27C4002-PNLDATA-VX.XX
14A (DMX-B4016) :27C4002-ELAP16-VX.XX	IF414A (DMX-B4016) :27C4002-ELDT16-VX.XX

VX.XX:Version No.

IF-414/414A (3/6)
DMX-B4008/B4016 CONSOLE

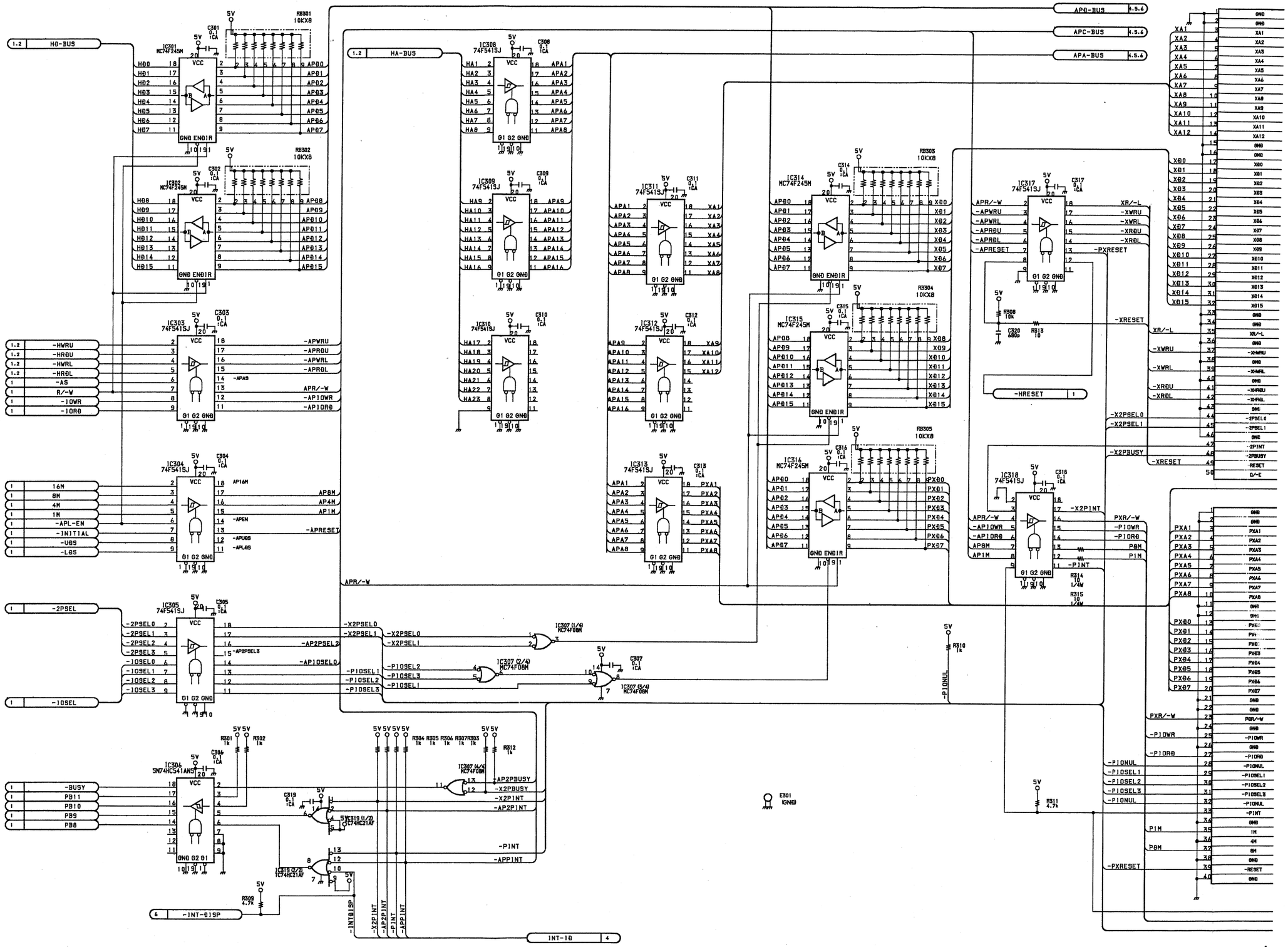

IF-414/414A (3/6)
DMX-B4008/B4016 CONSOLE

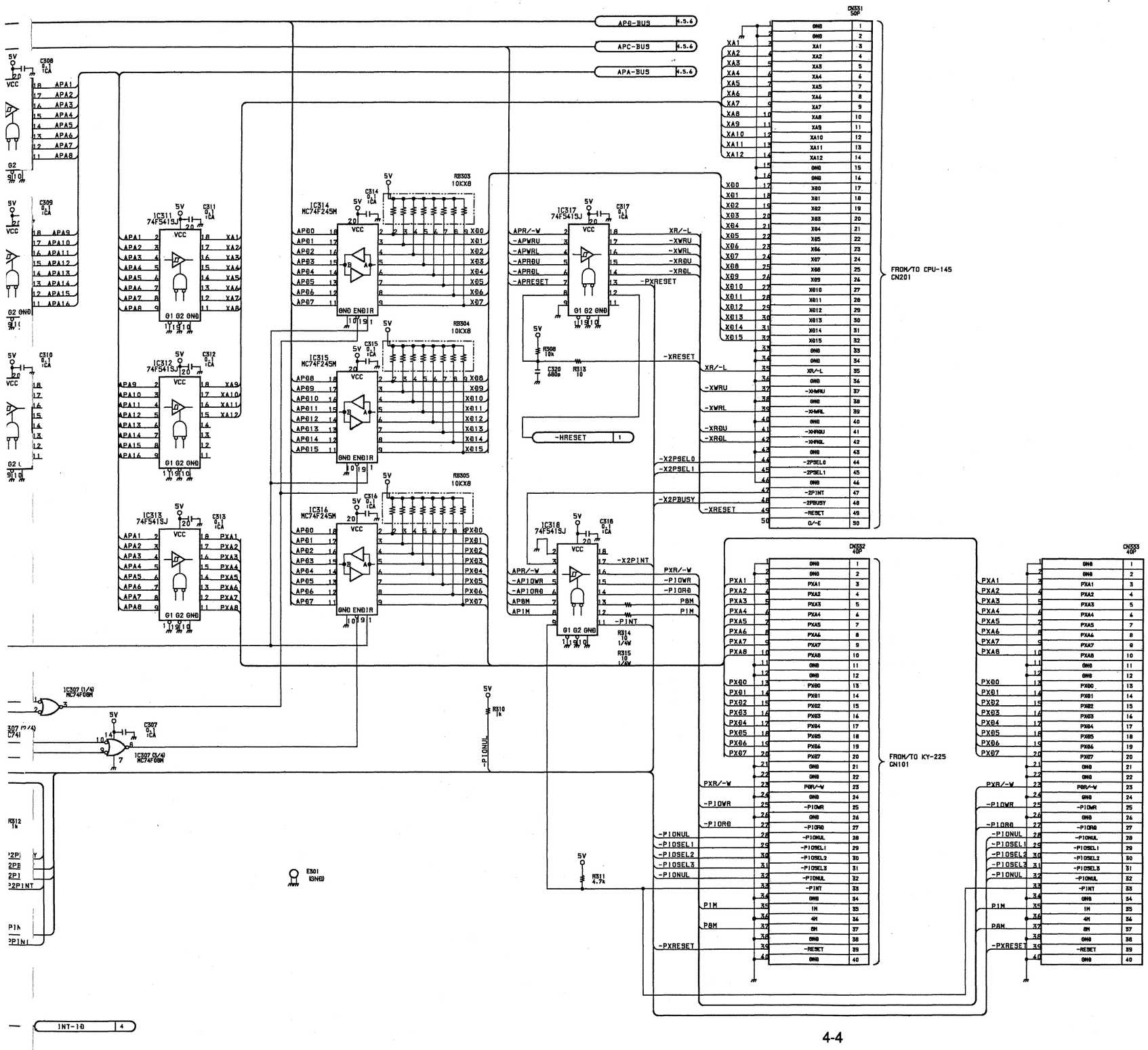

Channel CPU
IF-414 (for DMX-B4008)
IF-414A (for DMX-B4016) BOARD (3/6)

BOARD NO. 1-649-749-11
DMX-B4008/B4016

IF-414/414A (4/6)
DMX-B4008/B4016 CONSOLE

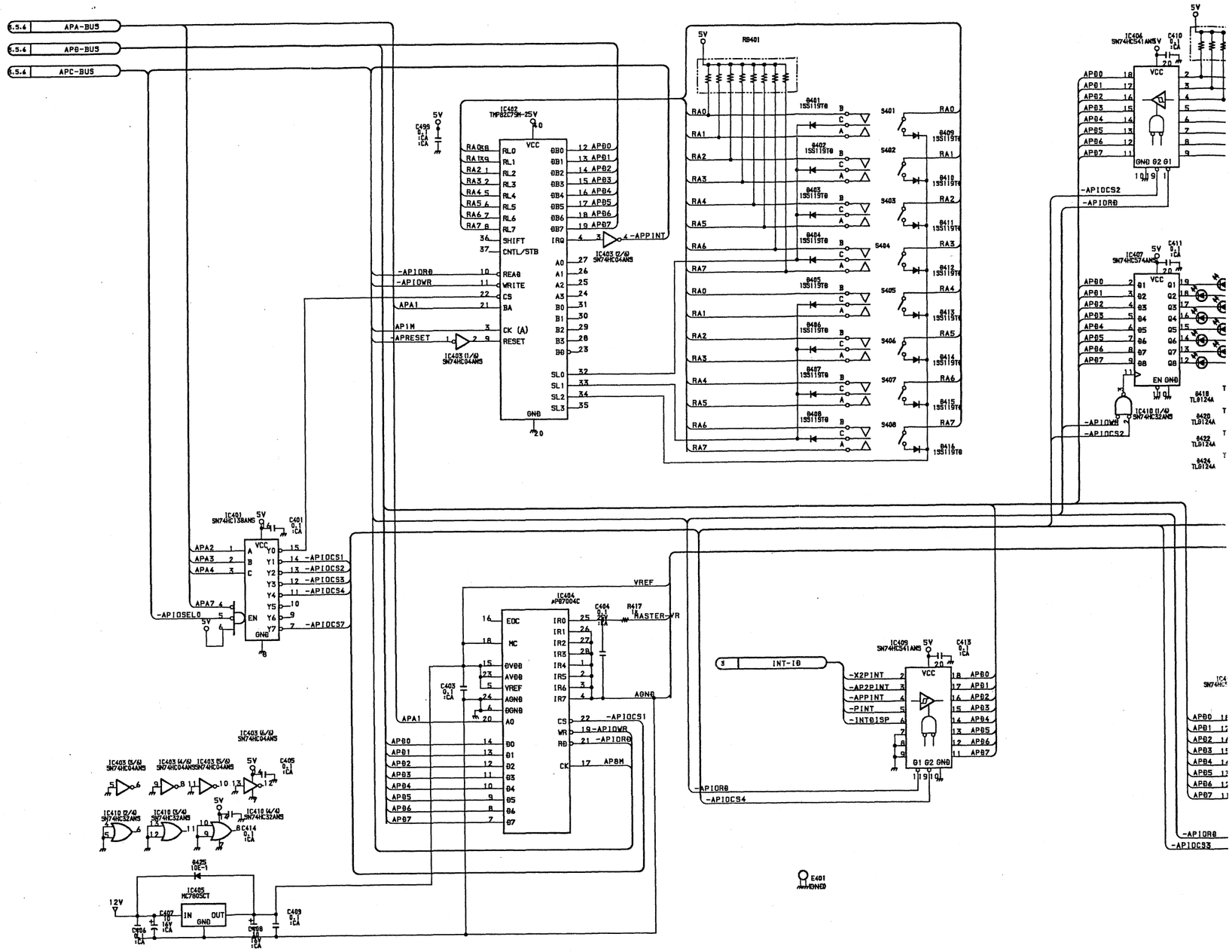

A B C D E F G H

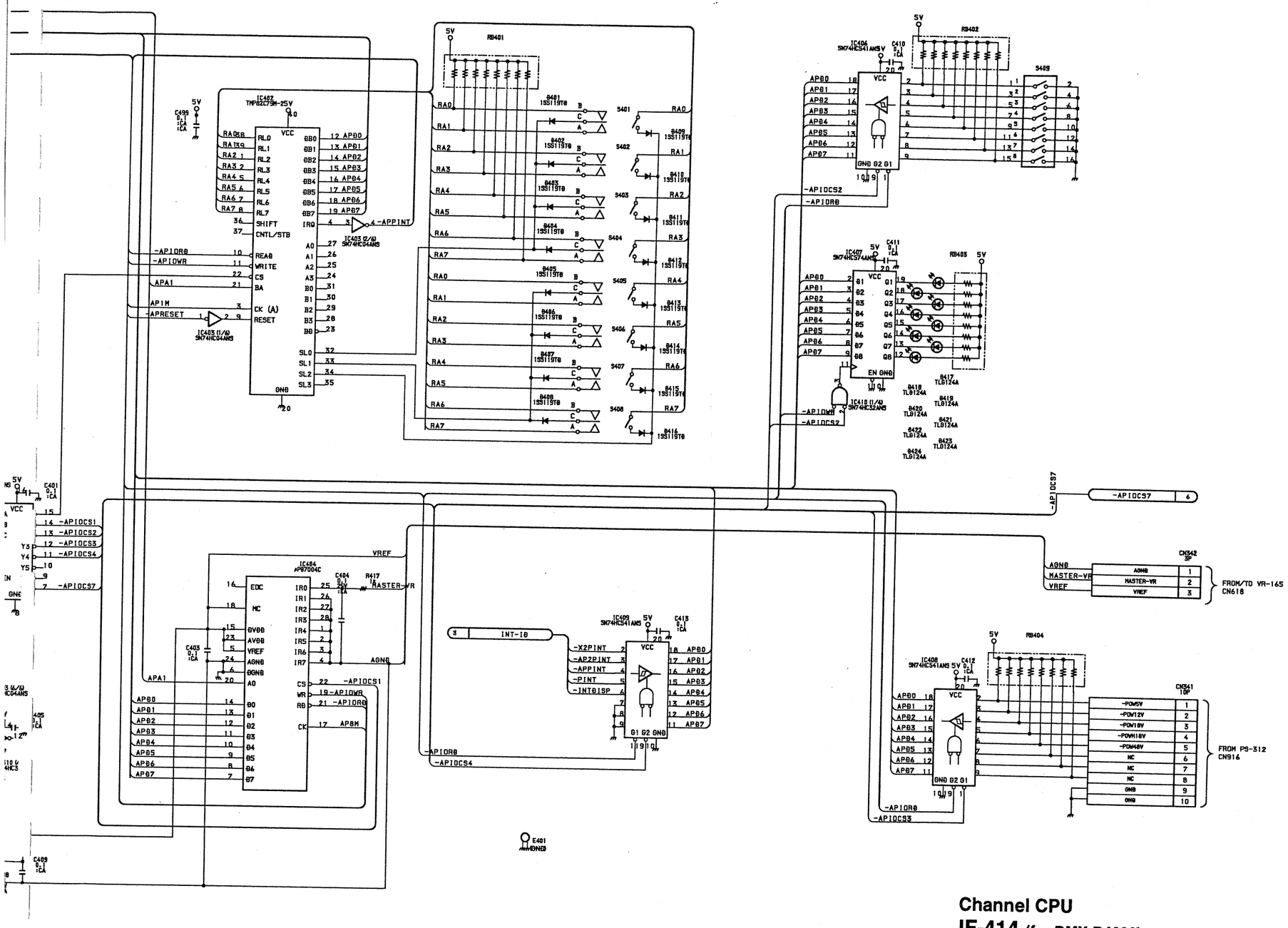

Channel CPU
IF-414 (for DMX-B4008)
IF-414A (for DMX-B4016) BOARD (4/6)

BOARD NO. 1-649-749-11
DMX-B4008/B4016

IF-414/414A (5/6)
DMX-B4008/B4016 CONSOLE

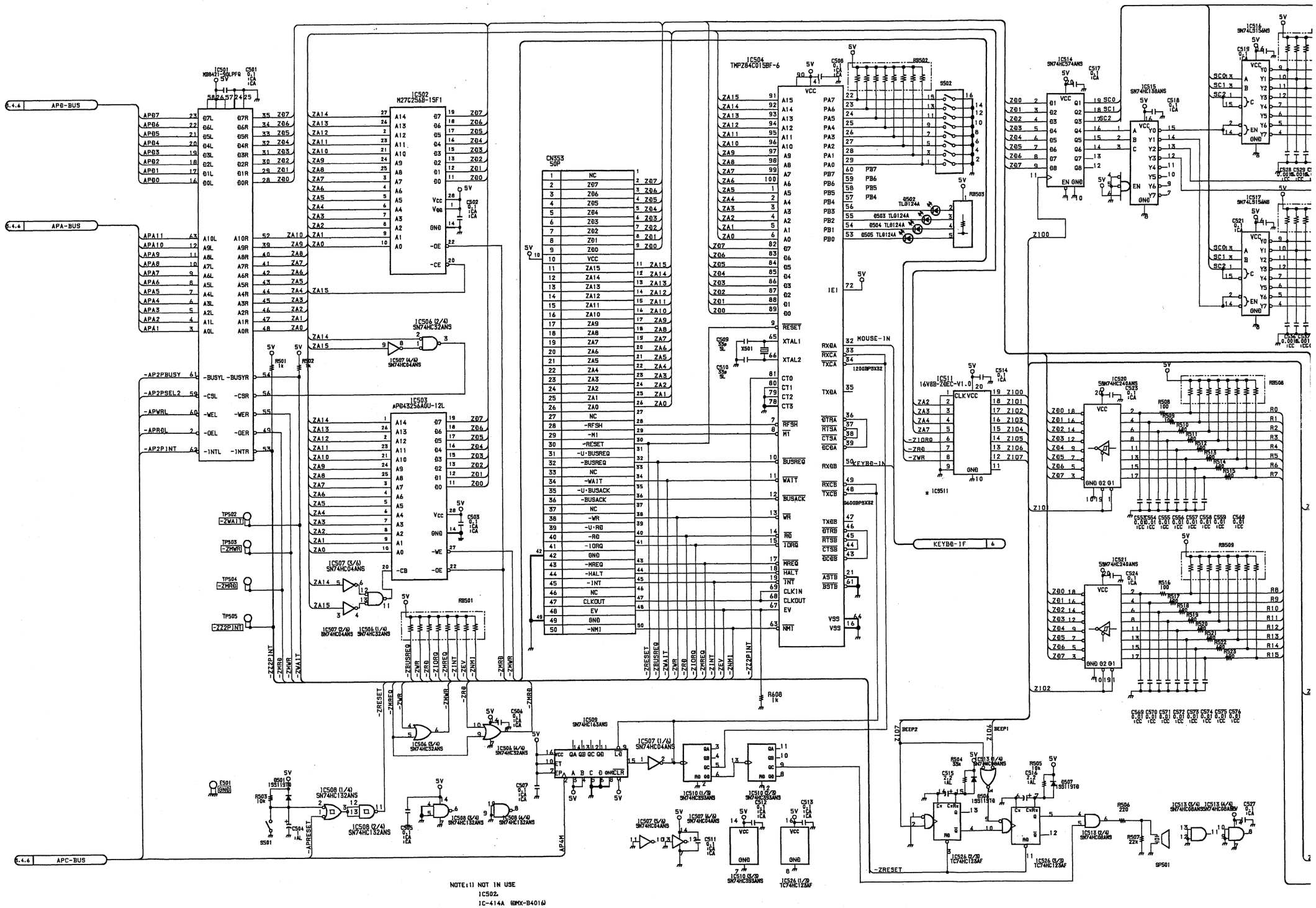

IF-414/414A (5/6)
DMX-B4008/B4016 CONSOLE

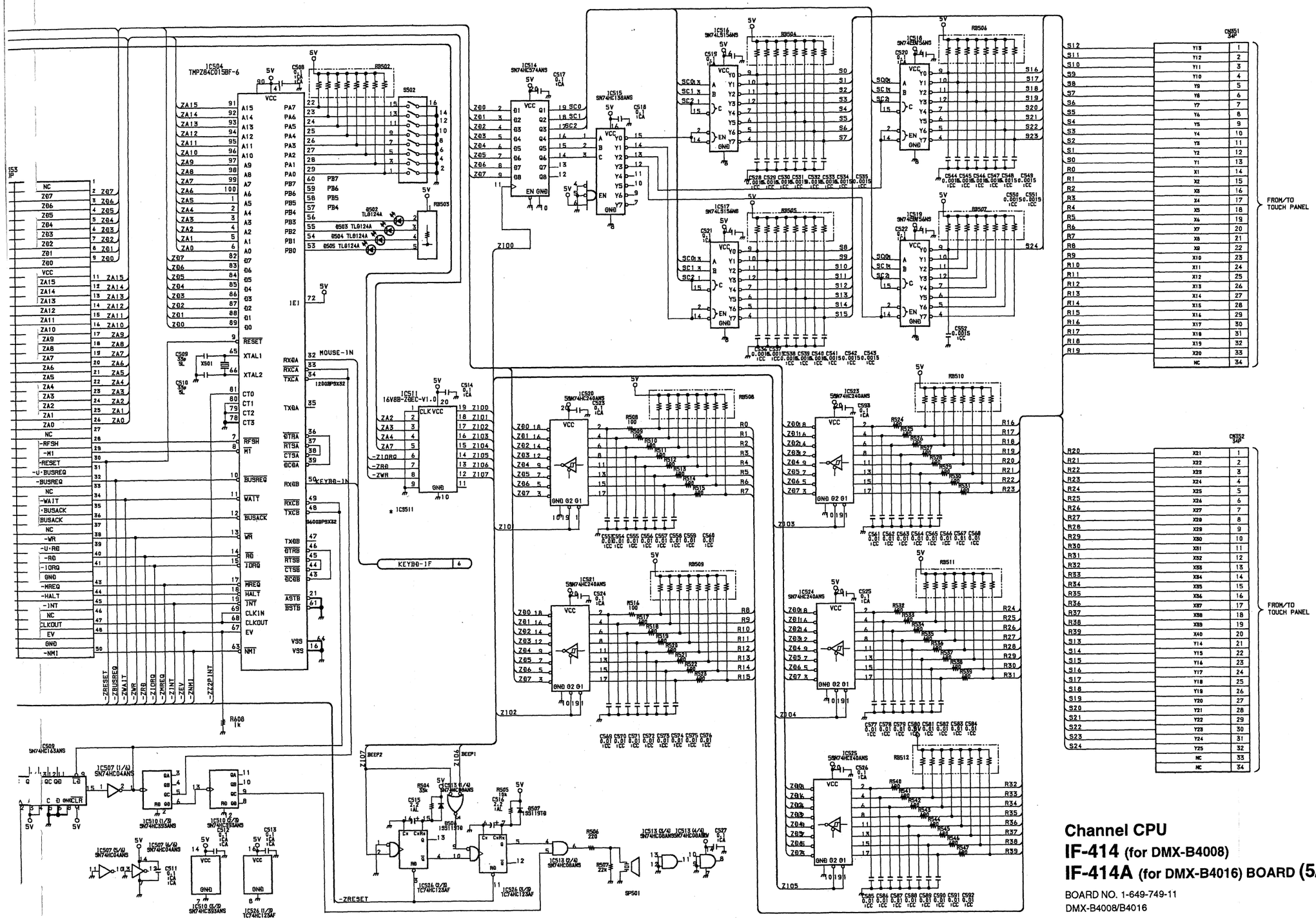

Channel CPU
IF-414 (for DMX-B4008)
IF-414A (for DMX-B4016) BOARD (5/6)

BOARD NO. 1-649-749-11
DMX-B4008/B4016

E F G H I J K L

IF-414/414A (6/6)
DMX-B4008/B4016 CONSOLE

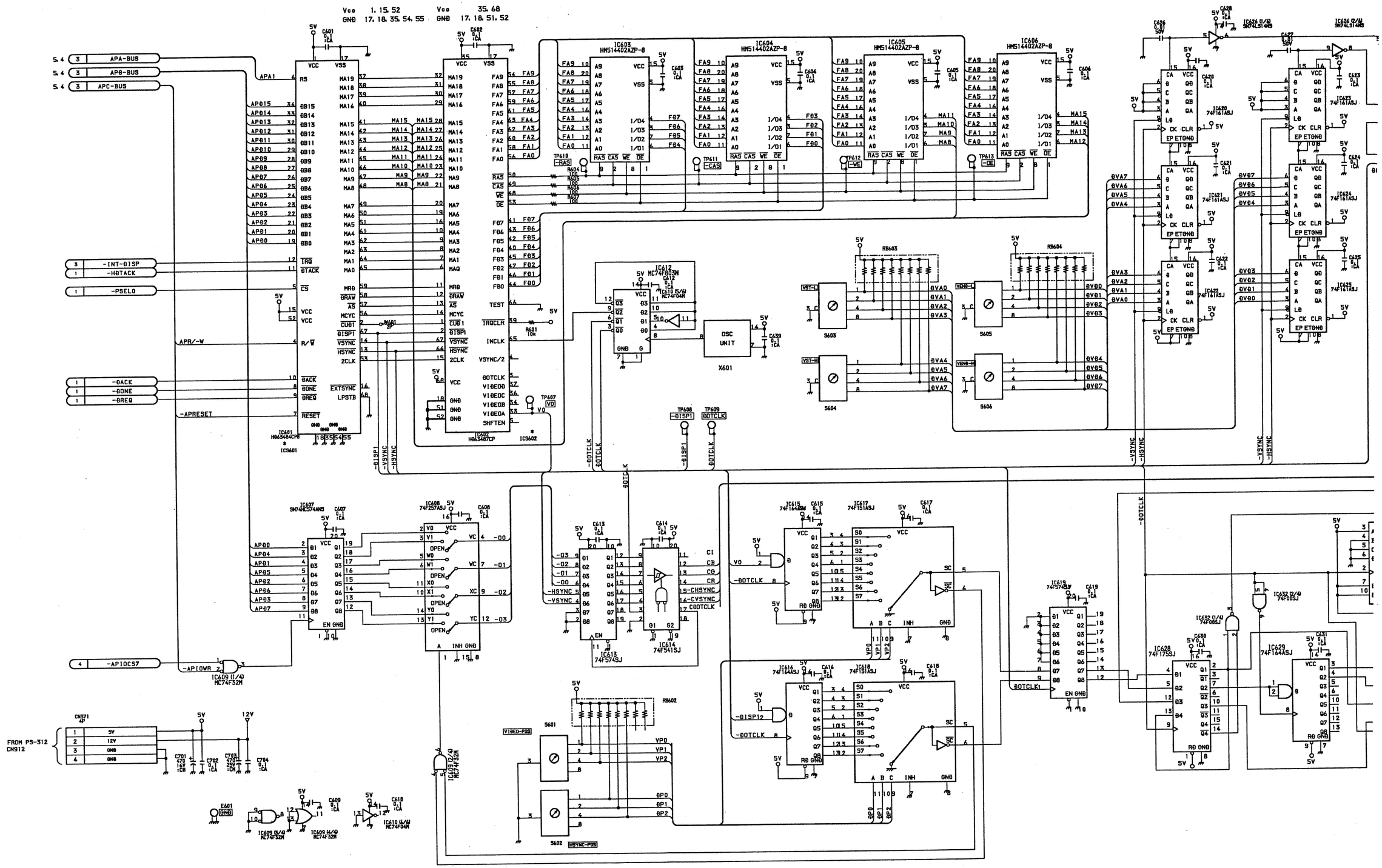

A B C D E F G H

IF-414/414A (6/6)
DMX-B4008/B4016 CONSOLE

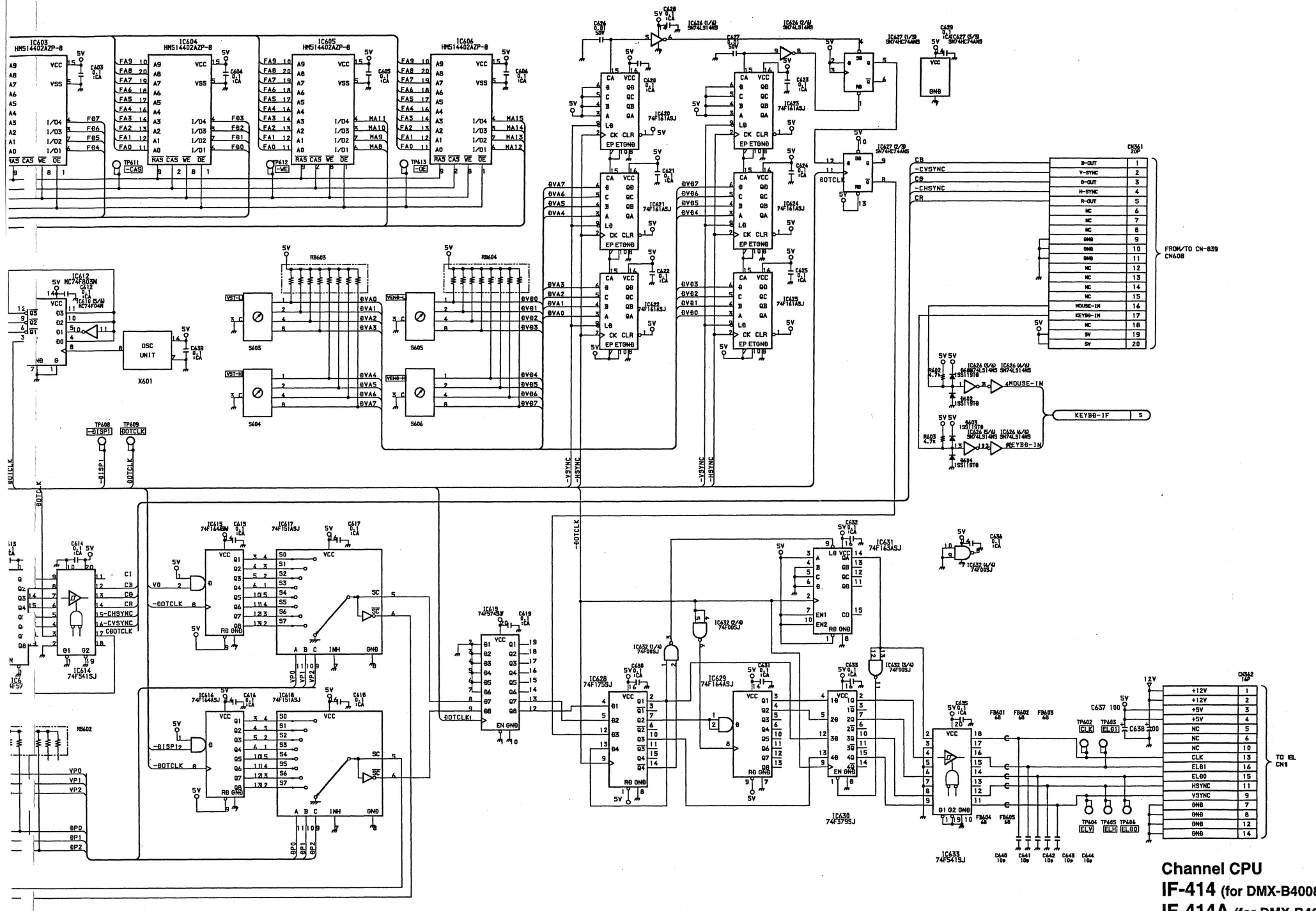

Channel CPU
IF-414 (for DMX-B4008)
IF-414A (for DMX-B4016) BOARD (6/6)

BOARD NO. 1-649-749-11
DMX-B4008/B4016

CPU-145/145A (1/7)
DMX-B4008/B4016 CONSOLE

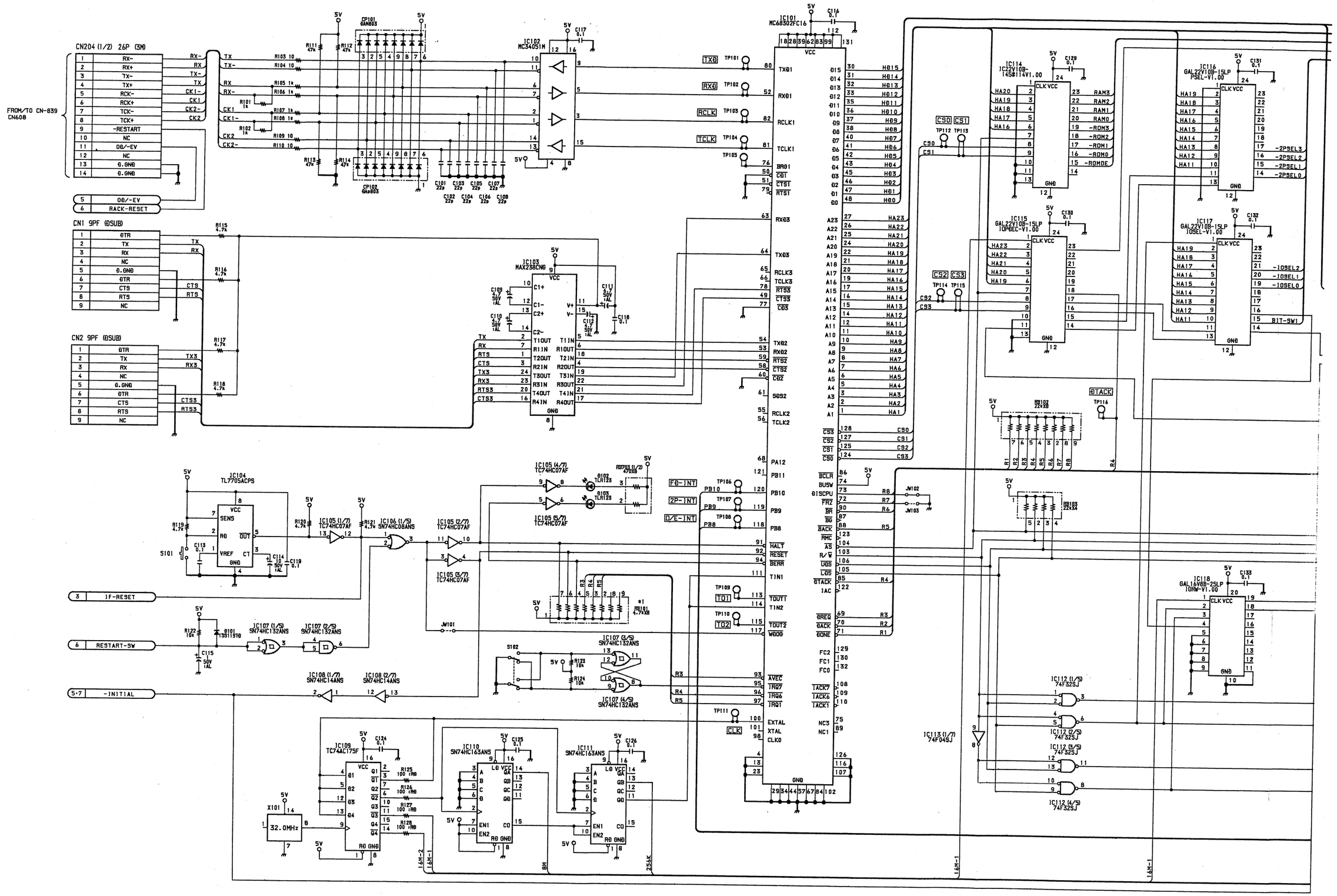

CPU-145/145A (1/7)
DMX-B4008/B4016 CONSOLE

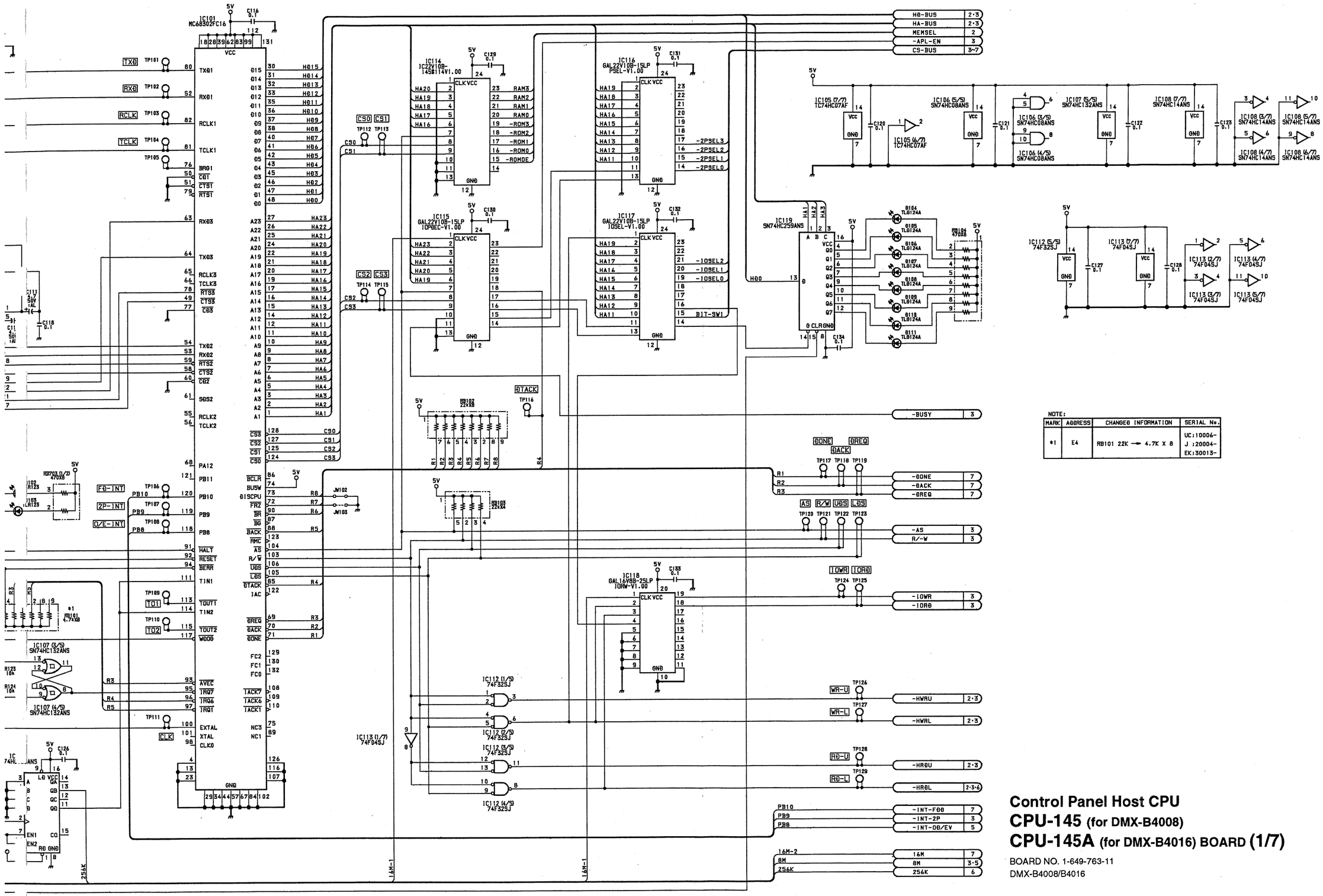

Control Panel Host CPU

CPU-145 (for DMX-B4008)

CPU-145A (for DMX-B4016) BOARD (1/7)

BOARD NO. 1-649-763-11
DMX-B4008/B4016

CPU-145/145A (2/7)
DMX-B4008/B4016 CONSOLE

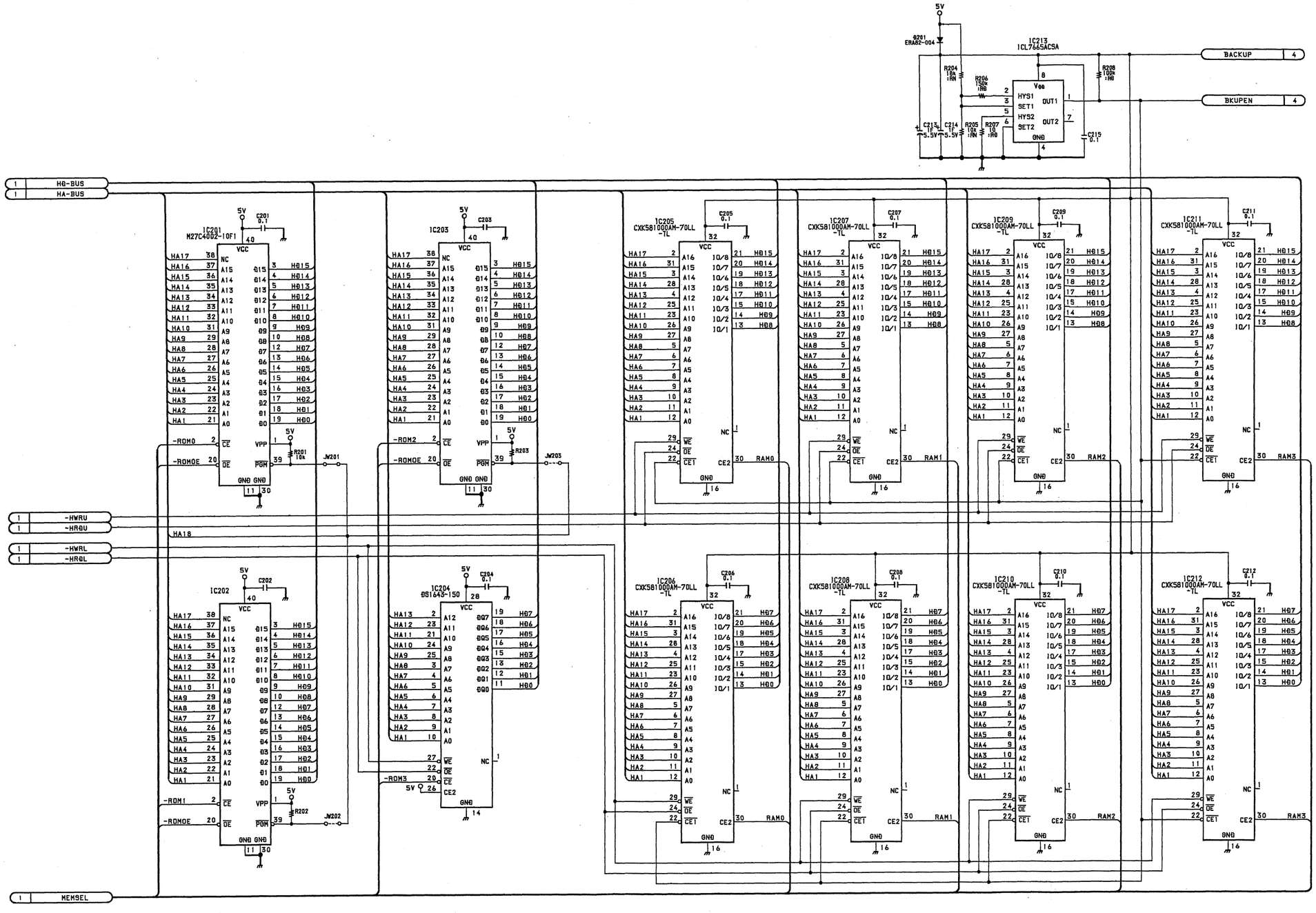

NOTE 1) DIFFERENCE OF CPU-145/CPU-145A MOUNT

IC201 ROM
CPU-145 (DMX-B4008) :27C4002-PNLHOST-VX.XX
CPU-145A (DMX-B4016) :27C4002-16HOST-VX.XX
VX.XX:Version No.

NOTE 2) NOT IN USE

IC202 R202 C202 JW202
IC203 R203 C203 JW203

Control Panel Host CPU
CPU-145 (for DMX-B4008)
CPU-145A (for DMX-B4016) BOARD (2/7)

BOARD NO. 1-649-763-11
DMX-B4008/B4016

4-9

CPU-145/145A (3/7)
DMX-B4008/B4016 CONSOLE

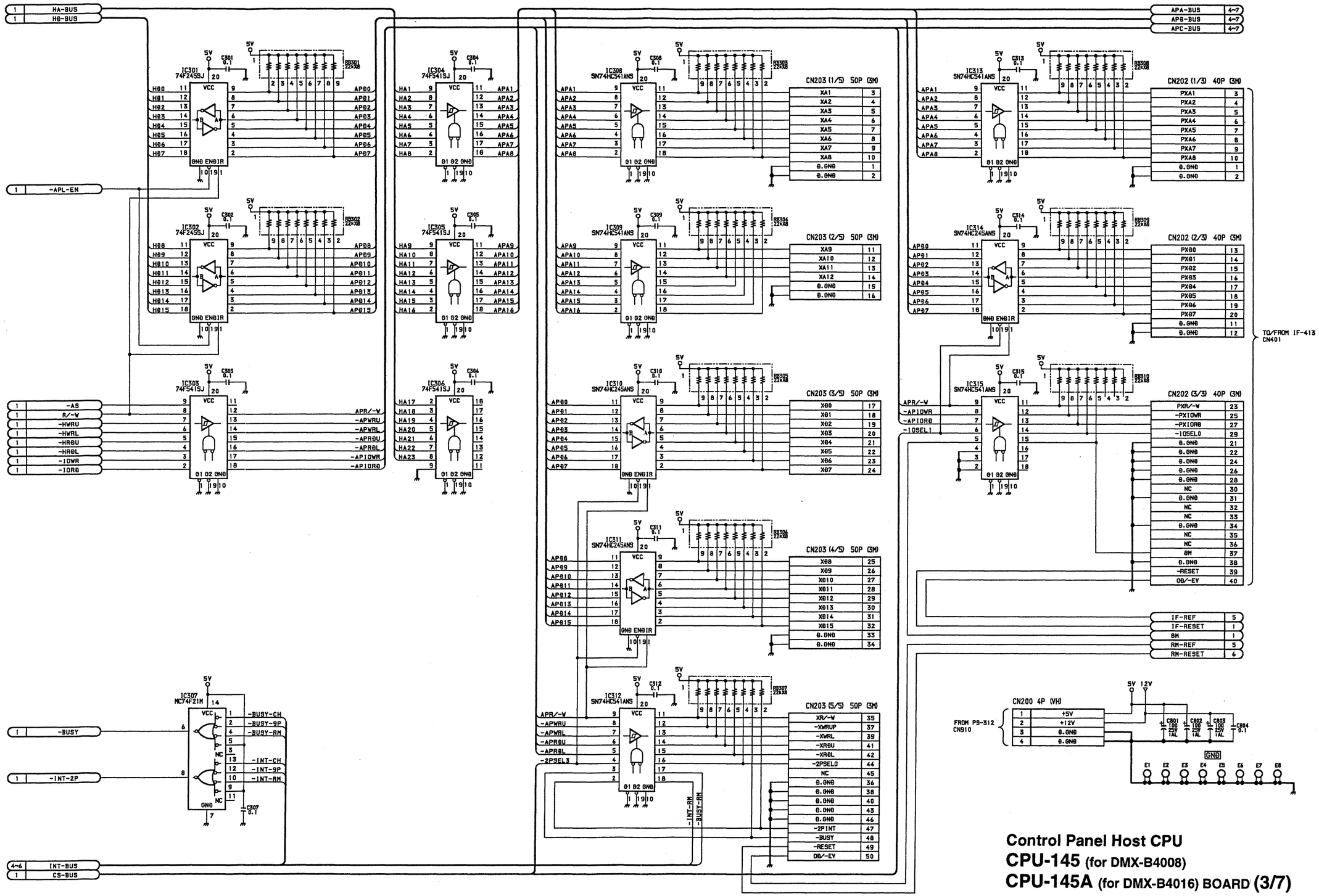

Control Panel Host CPU
CPU-145 (for DMX-B4008)
CPU-145A (for DMX-B4016) BOARD (3/7)

BOARD NO. 1-649-763-11
DMX-B4008/B4016

4-10

CPU-145/145A (4/7)
DMX-B4008/B4016 CONSOLE

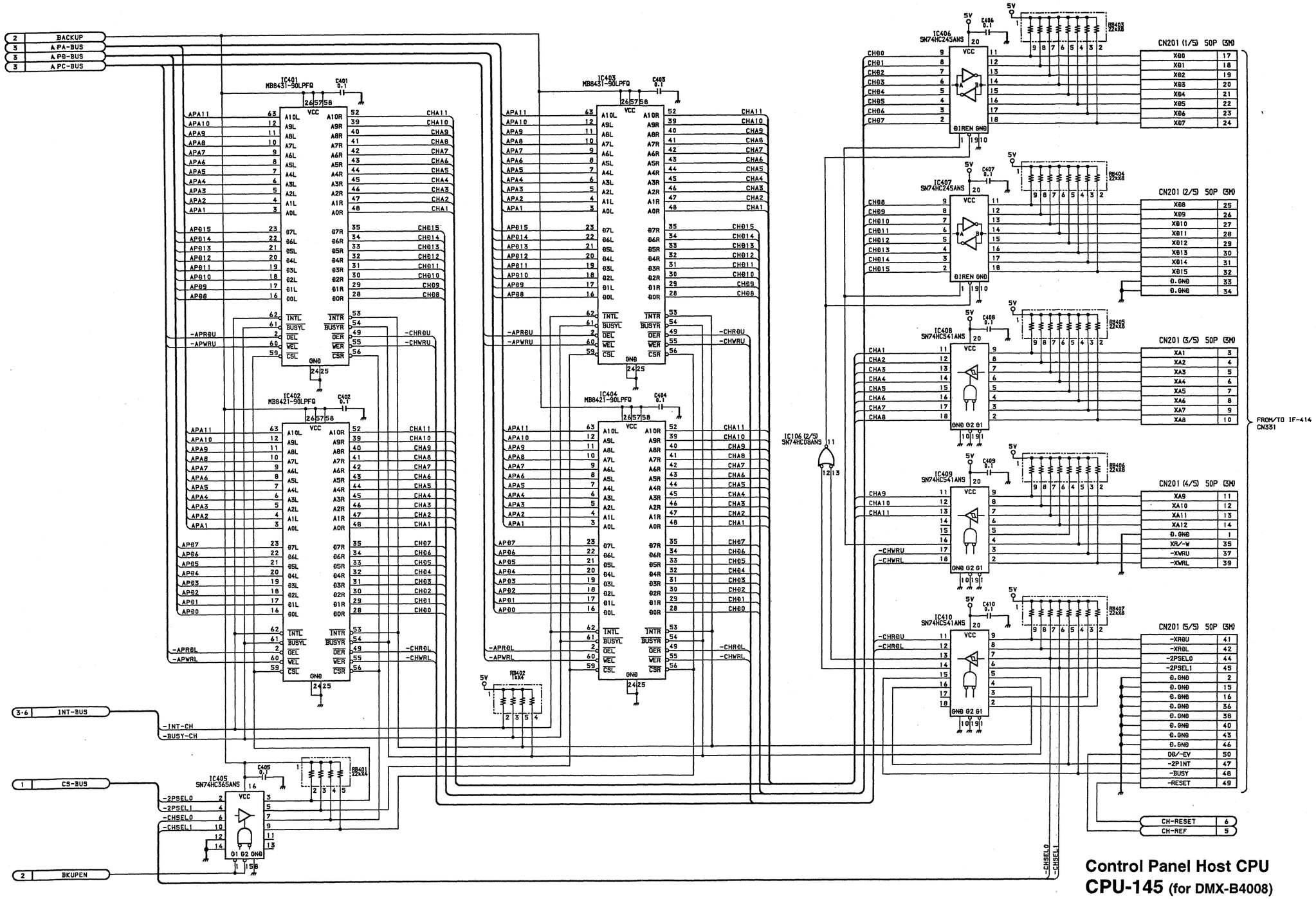

Control Panel Host CPU
CPU-145 (for DMX-B4008)
CPU-145A (for DMX-B4016) BOARD (4/7)

BOARD NO. 1-649-763-11
DMX-B4008/B4016

4-11

CPU-145/145A (5/7)
DMX-B4008/B4016 CONSOLE

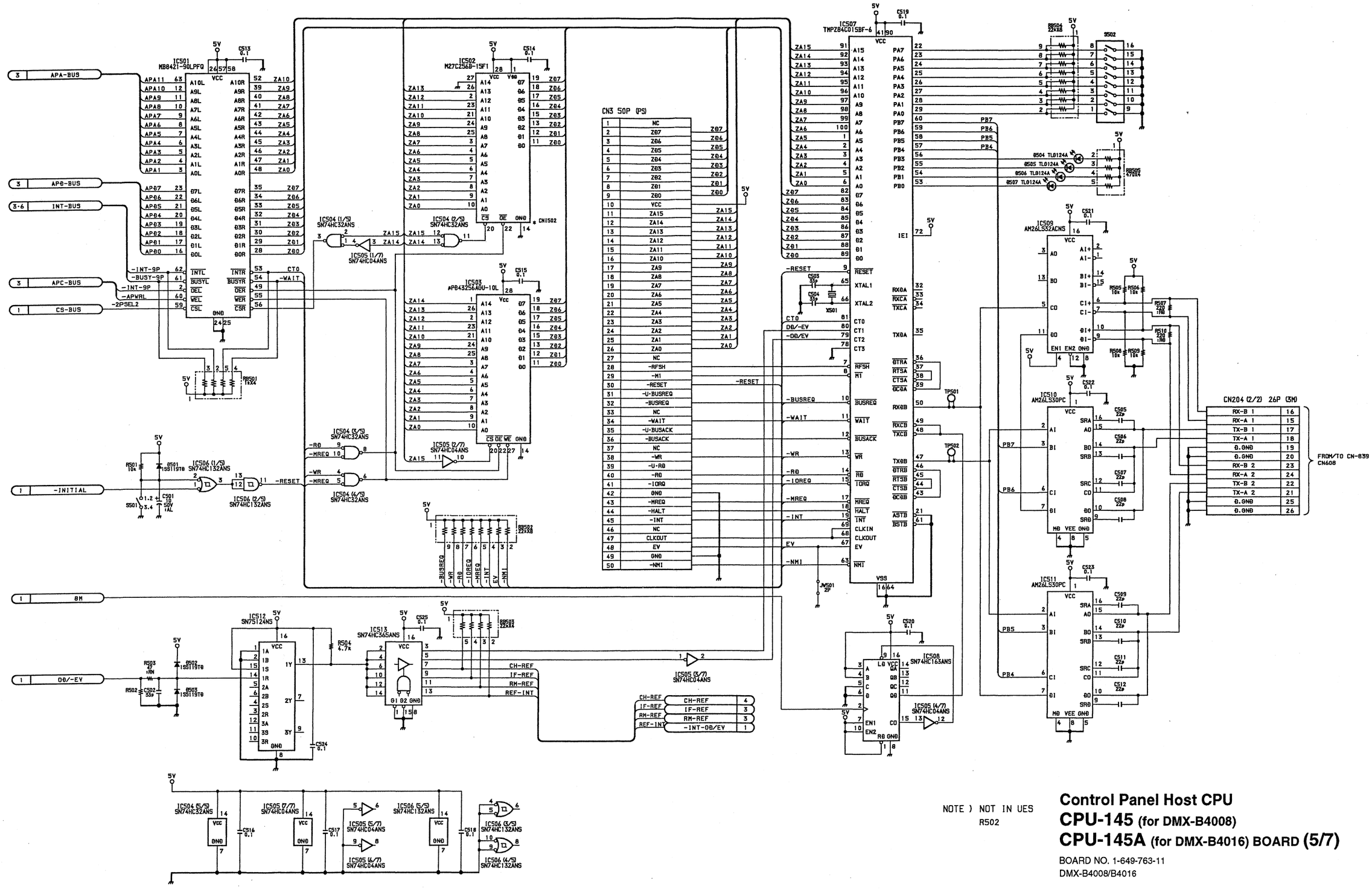

NOTE) NOT IN UES
R502

Control Panel Host CPU
CPU-145 (for DMX-B4008)
CPU-145A (for DMX-B4016) BOARD (5/7)

BOARD NO. 1-649-763-11
DMX-B4008/B4016

4-12

CPU-145/145A (6/7)
DMX-B4008/B4016 CONSOLE

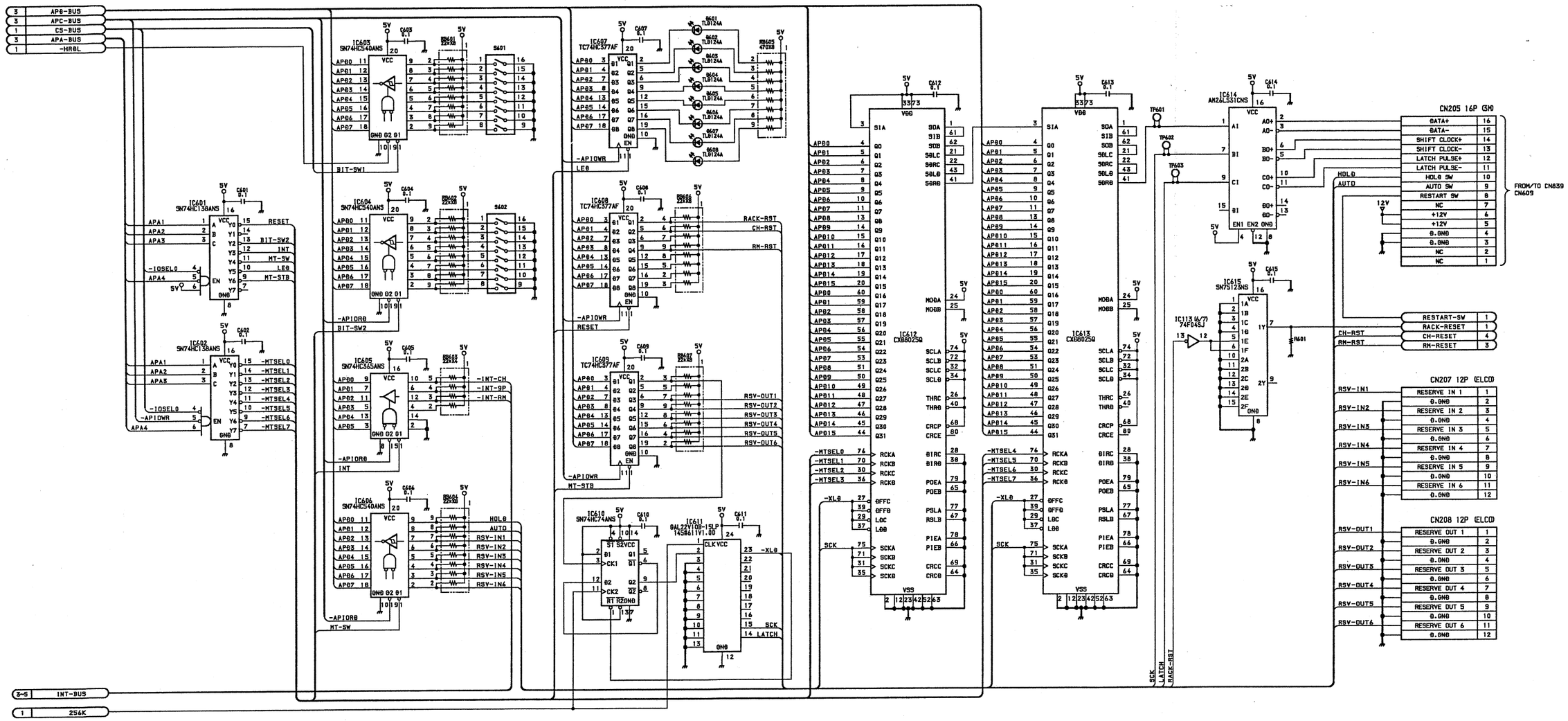

NOTE) NOT IN USE
R601

Control Panel Host CPU
CPU-145 (for DMX-B4008)
CPU-145A (for DMX-B4016) BOARD (6/7)

BOARD NO. 1-649-763-11
DMX-B4008/B4016

4-13

CPU-145/145A (7/7)
DMX-B4008/B4016 CONSOLE

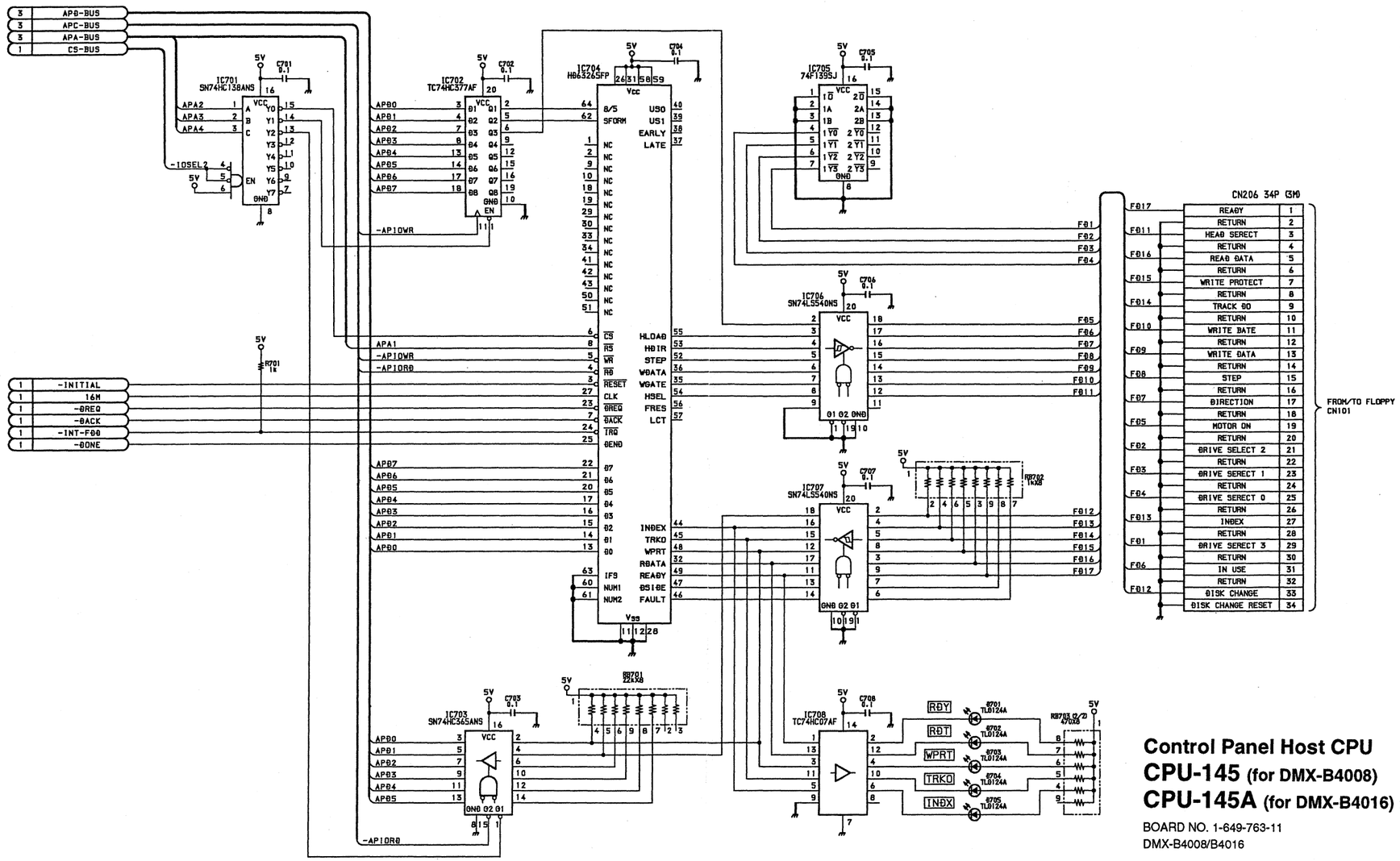

Control Panel Host CPU
CPU-145 (for DMX-B4008)
CPU-145A (for DMX-B4016) BOARD (7/7)

BOARD NO. 1-649-763-11
DMX-B4008/B4016

4-14

IF-413 (1/4)
DMX-B4008/B4016 CONSOLE

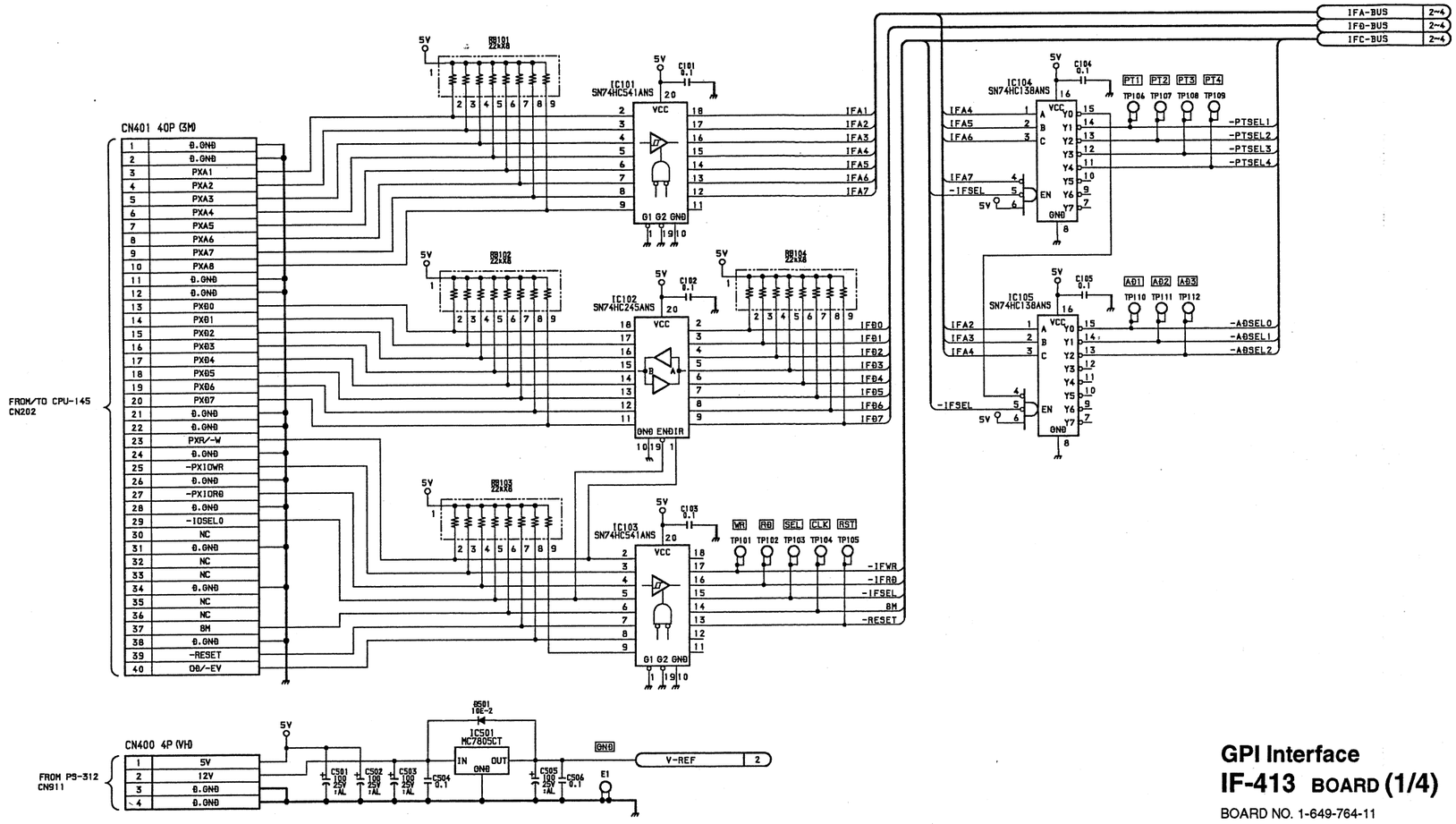

GPI Interface
IF-413 BOARD (1/4)

BOARD NO. 1-649-764-11
DMX-B4008/B4016

4-15

IF-413 (2/4)
DMX-B4008/B4016 CONSOLE

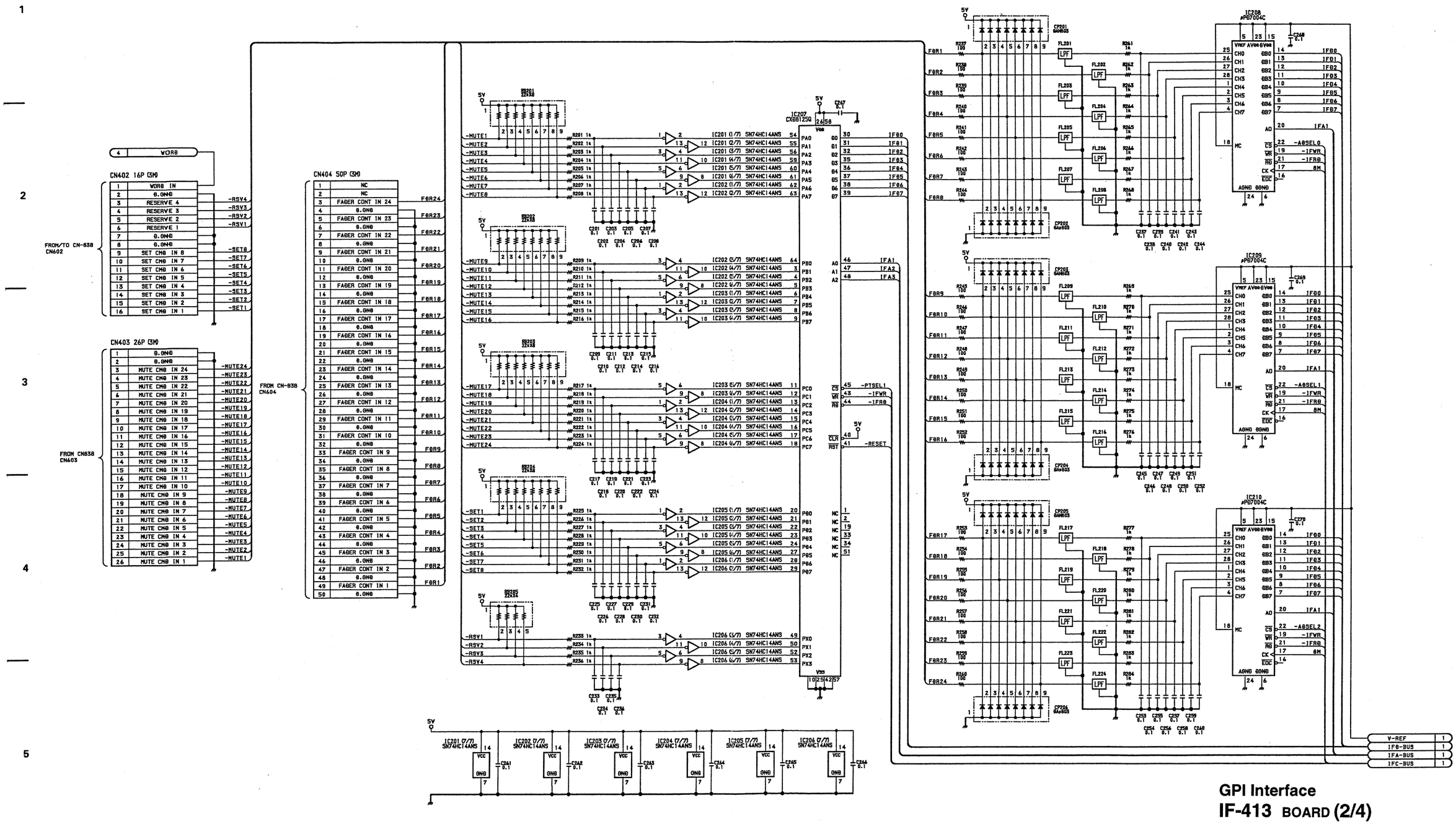

GPI Interface
IF-413 BOARD (2/4)

BOARD NO. 1-649-764-11
DMX-B4008/B4016

4-16

IF-413 (3/4)
DMX-B4008/B4016 CONSOLE

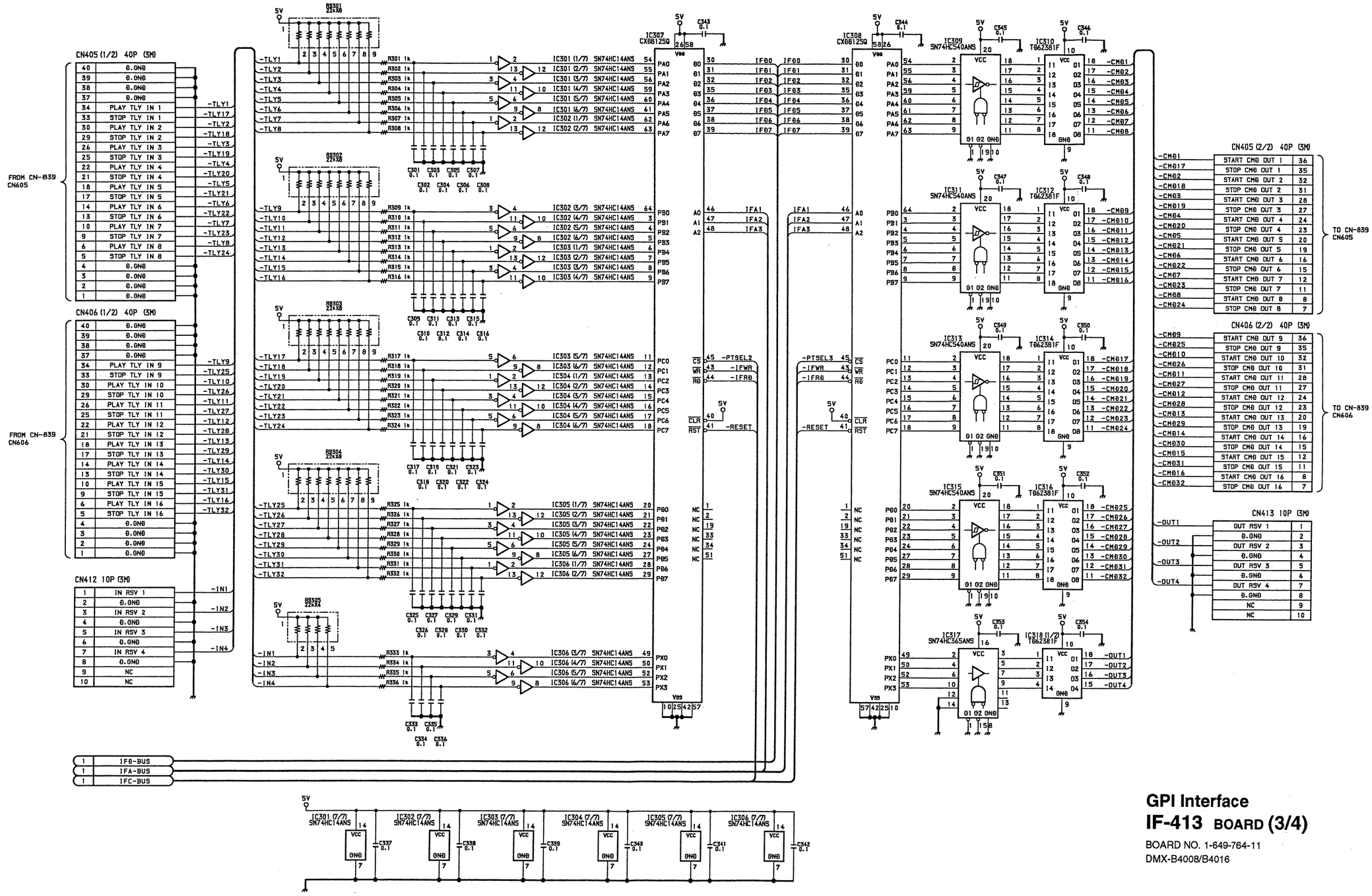

GPI Interface
IF-413 BOARD (3/4)

BOARD NO. 1-649-764-11
DMX-B4008/B4016

4-17

IF-413 (4/4)
DMX-B4008/B4016 CONSOLE

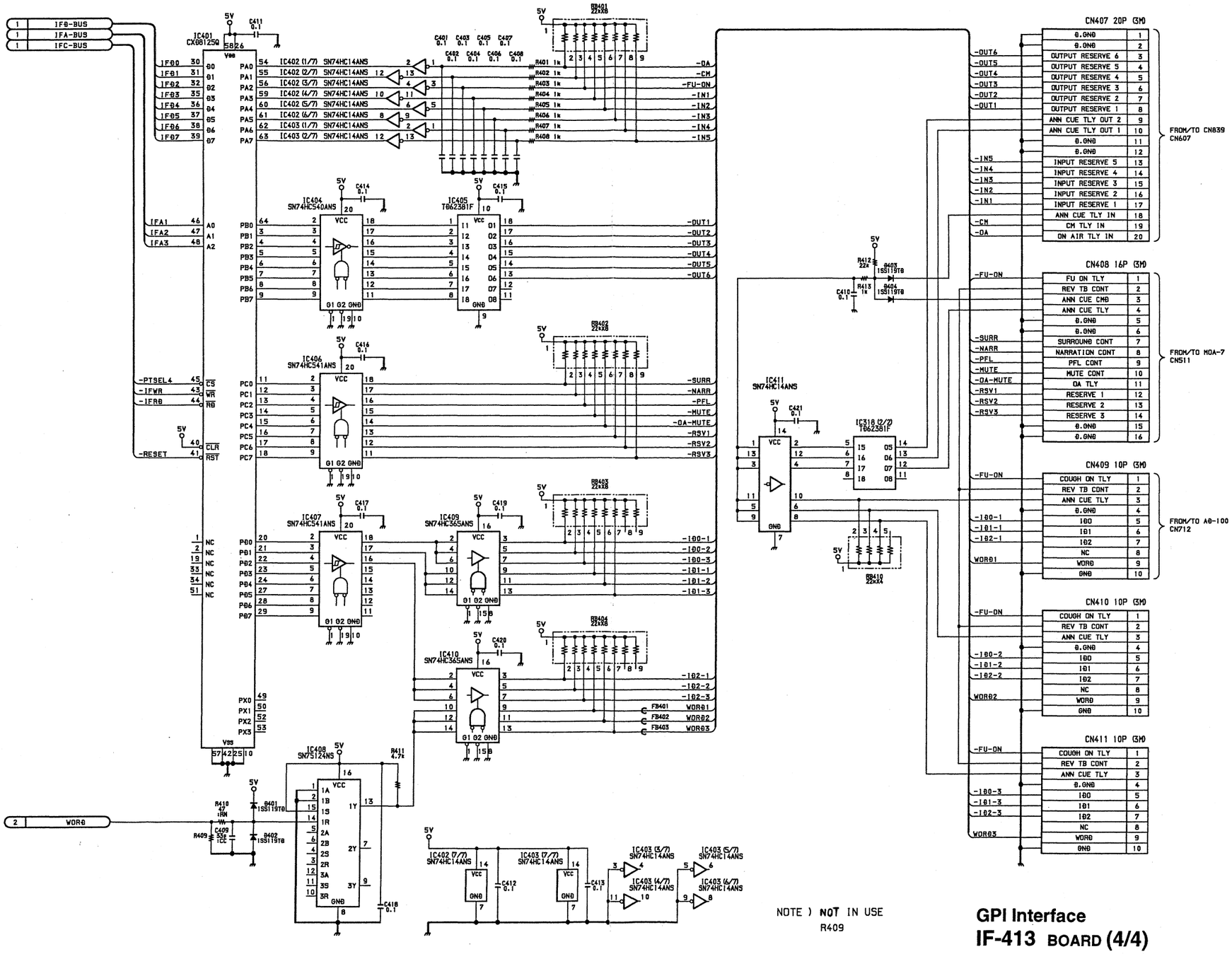

NOTE) **NOT** IN USE
R409

GPI Interface
IF-413 BOARD (4/4)

BOARD NO. 1-649-764-11
DMX-B4008/B4016

4-18

MOA-7A/7B (1/5)
DMX-B4008/B4016 CONSOLE

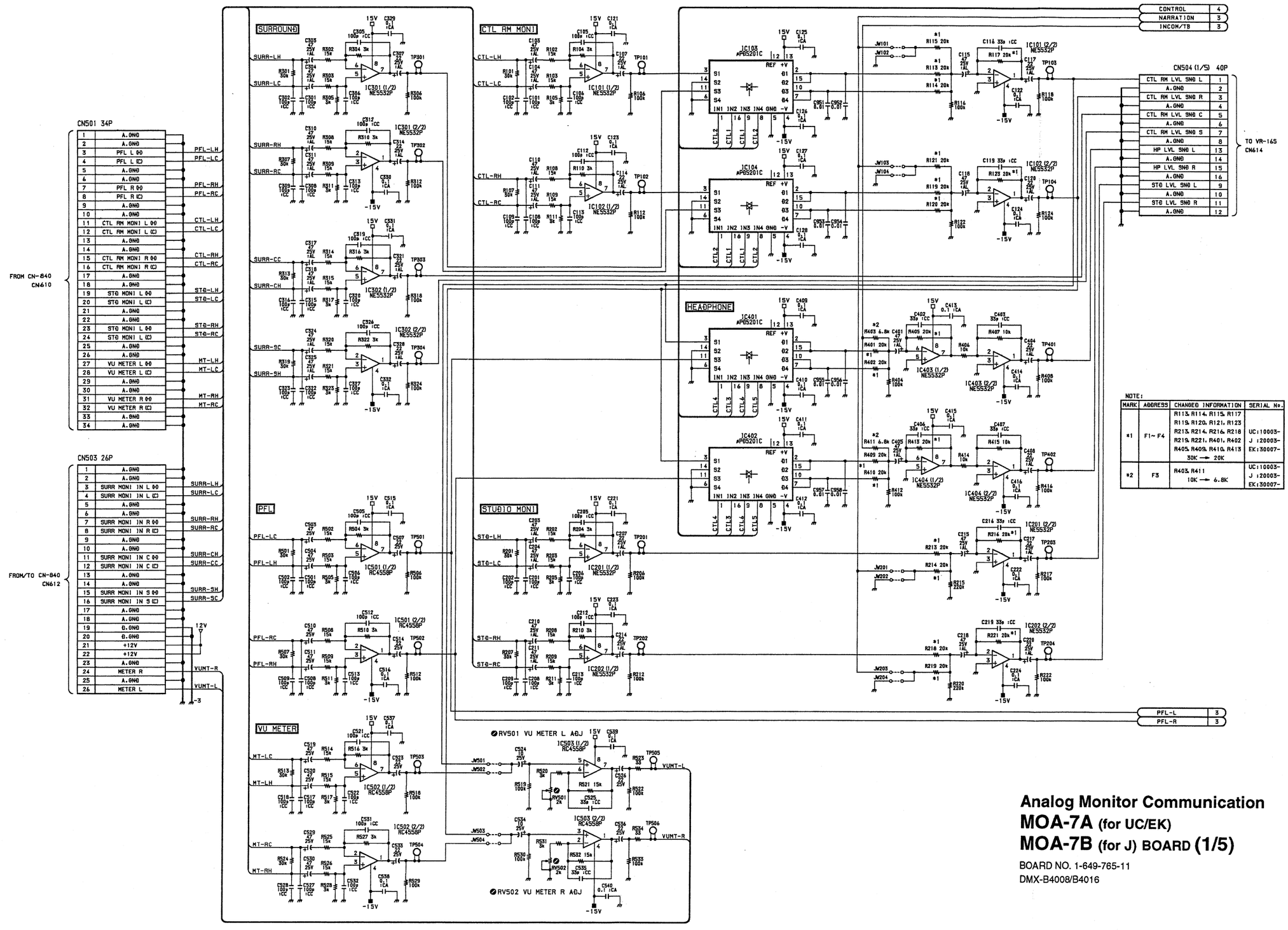

MARK	ADDRESS	CHANGED INFORMATION	SERIAL No.
*1	F1~F4	R113, R114, R115, R117 R119, R120, R121, R123 R213, R214, R216, R218 R219, R221, R401, R402 R405, R409, R410, R413 30K → 20K	UC:10003- J :20003- EK:30007-
*2	F3	R403, R411 10K → 6.8K	UC:10003- J :20003- EK:30007-

Analog Monitor Communication
MOA-7A (for UC/EK)
MOA-7B (for J) BOARD (1/5)

BOARD NO. 1-649-765-11
DMX-B4008/B4016

4-19

MOA-7A/7B (2/5)
DMX-B4008/B4016 CONSOLE

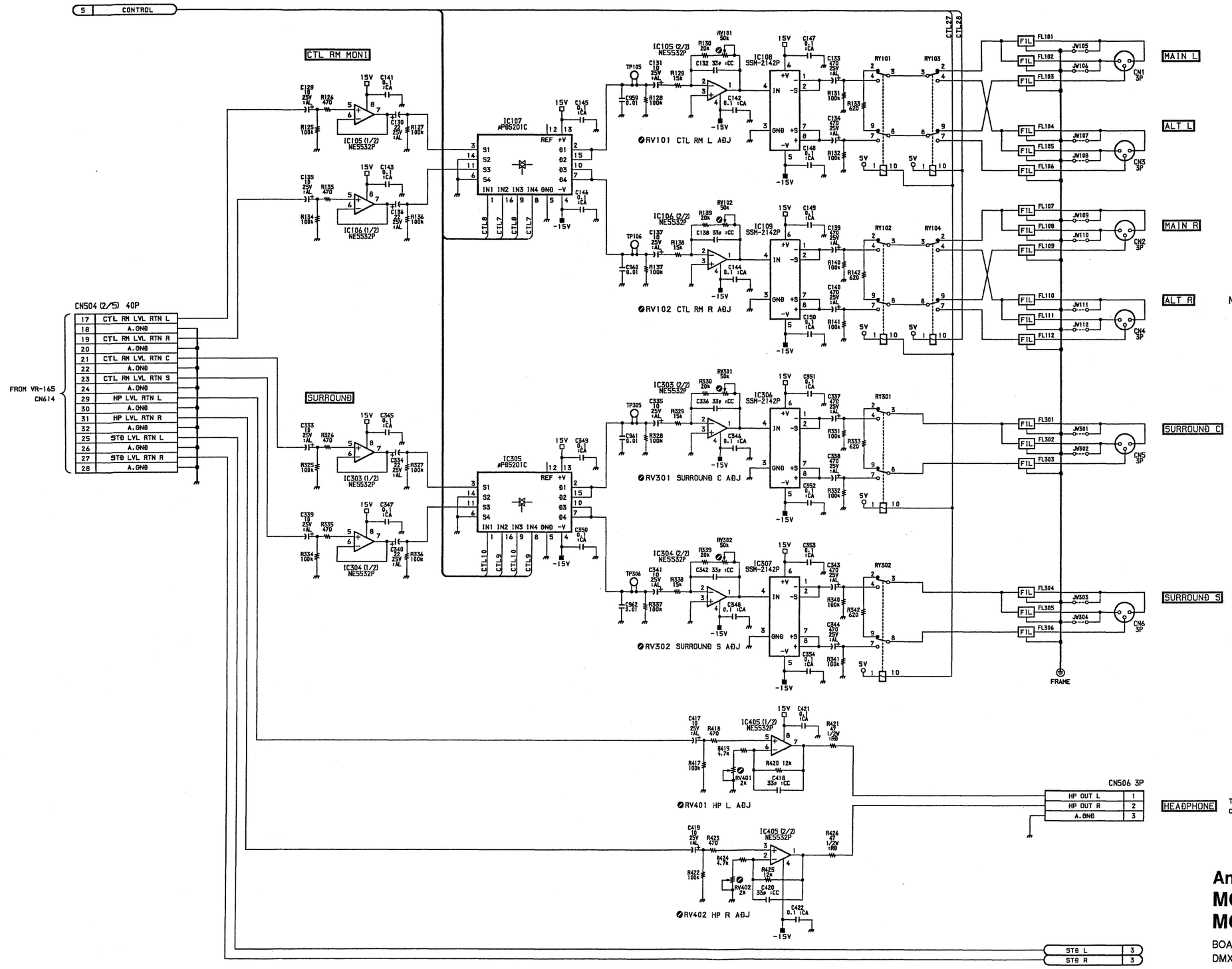

NOTE) DIFFERENCE OF A/B MOUNT

MOA-7A MOUNT

CN1~10 : XLR-3P MALE
NOT IN USE : FL101 FL104 FL107 FL110
FL301 FL304
JW106 JW108 JW110 JW112
JW302 JW304

MOA-7B MOUNT

CN1~10 : XLR-3P FEMALE
NOT IN USE : FL102 FL105 FL108 FL111
FL302 FL305
JW105 JW107 JW109 JW111
JW301 JW303

Analog Monitor Communication
MOA-7A (for UC/EK)
MOA-7B (for J) BOARD (2/5)

BOARD NO. 1-649-765-11
DMX-B4008/B4016

4-20

MOA-7A/7B (3/5)
DMX-B4008/B4016 CONSOLE

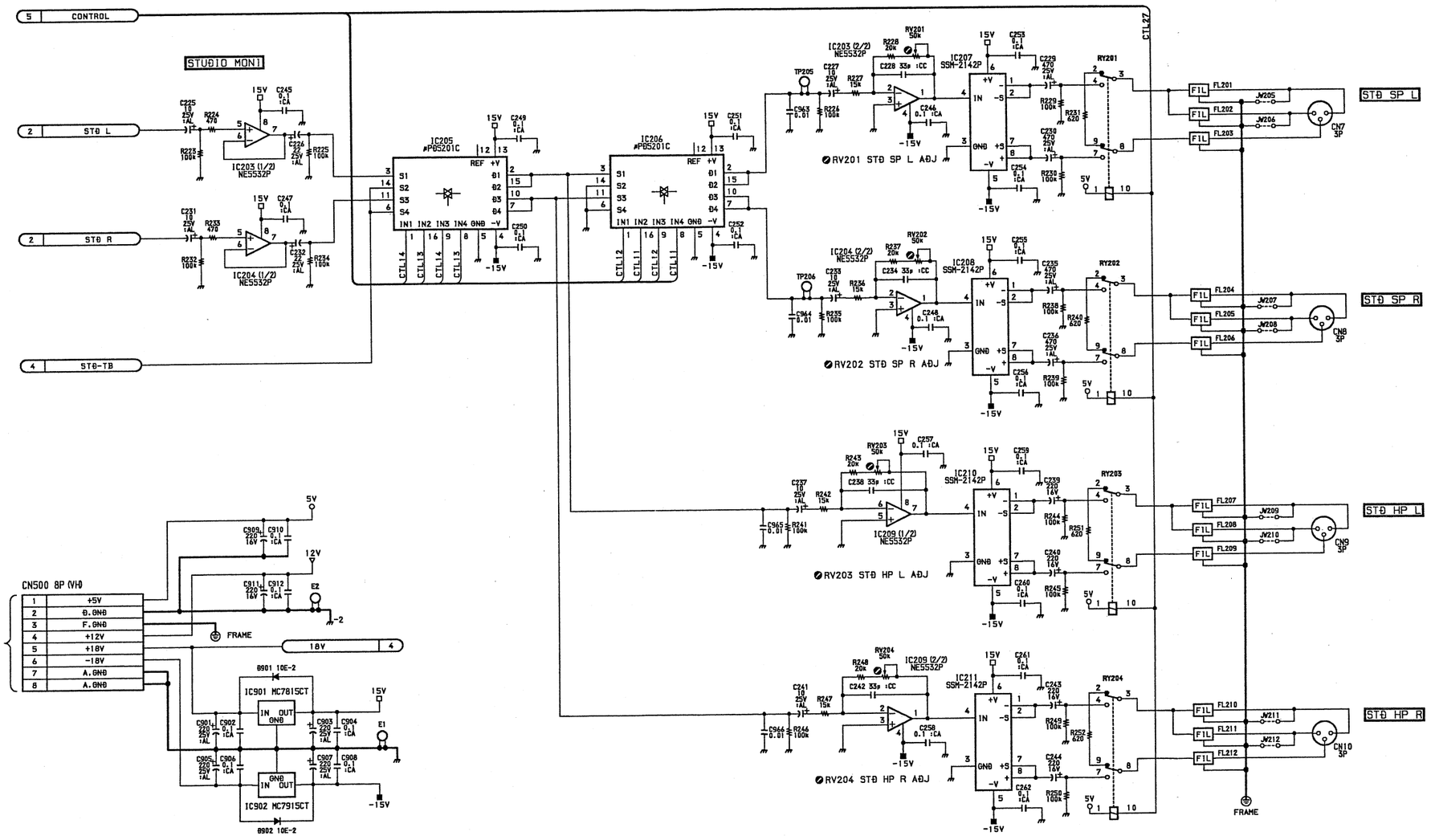

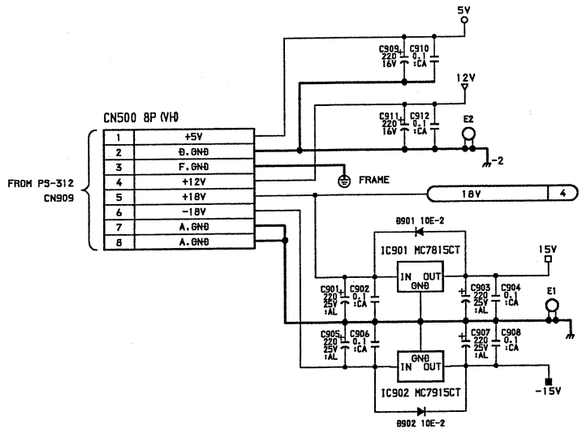

NOTE) DIFFERENCE OF A/B MOUNT

MOA-7A MOUNT

CN1~10 : XLR-3P MALE
NOT IN USE : FL201 FL204 FL207 FL210
JW206 JW208 JW210 JW212

MOA-7B MOUNT

CN1~10 : XLR-3P FEMALE
NOT IN USE : FL202 FL205 FL208 FL211
JW205 JW207 JW209 JW211

Analog Monitor Communication
MOA-7A (for UC/EK)
MOA-7B (for J) BOARD (3/5)

BOARD NO. 1-649-765-11
DMX-B4008/B4016

4-21

MOA-7A/7B (4/5)
DMX-B4008/B4016 CONSOLE

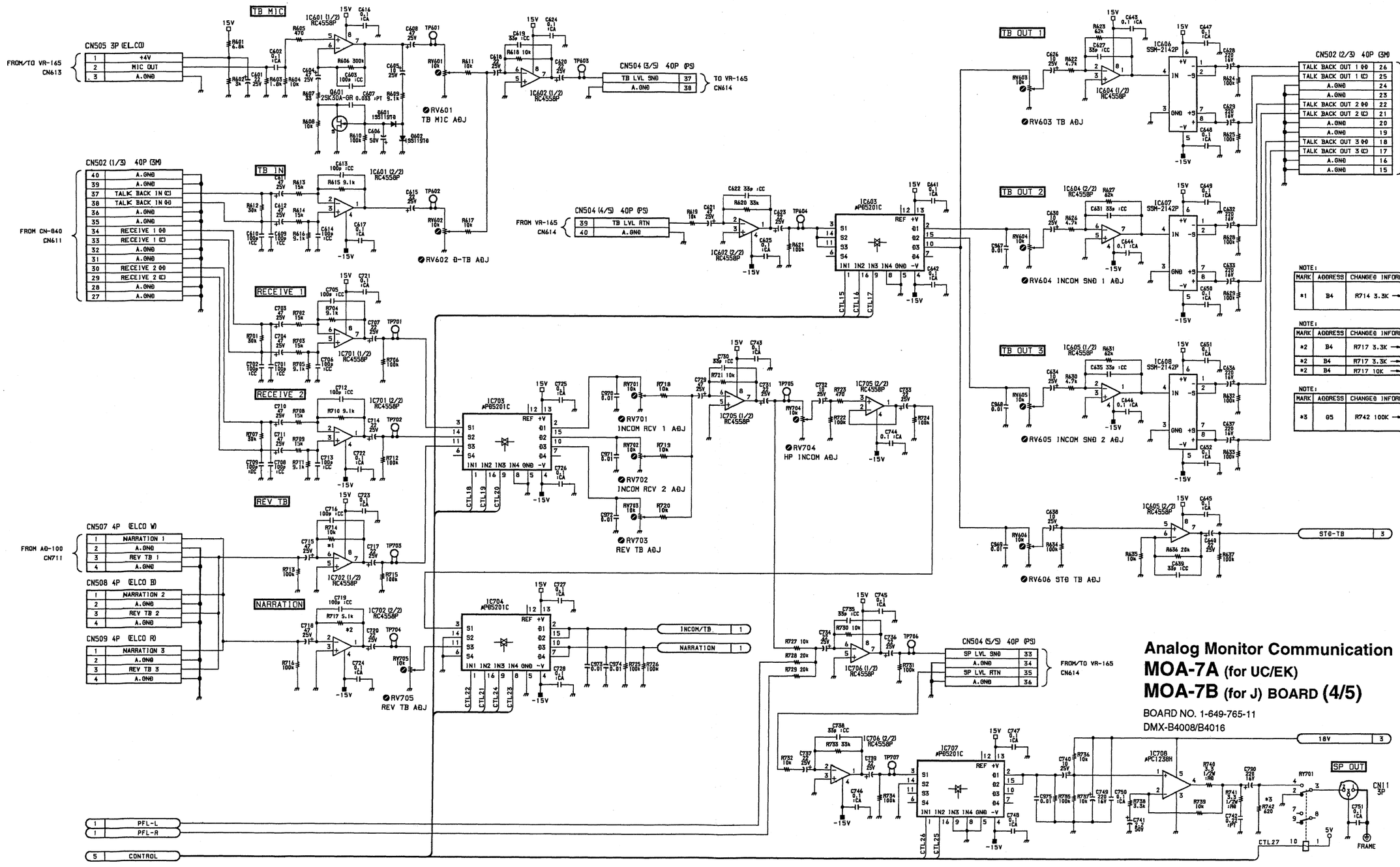

NOTE:			
MARK	ADDRESS	CHANGED INFORMATION	SERIAL No.
*1	B4	R714 3.3K → 10K	UC:10003- J :20003- EK:30007-

NOTE:			
MARK	ADDRESS	CHANGED INFORMATION	SERIAL No.
*2	B4	R717 3.3K → 5.1K	UC:10003- J :20003-
*2	B4	R717 3.3K → 10K	EK:30007-
*2	B4	R717 10K → 5.1K	EK:30010-

NOTE:			
MARK	ADDRESS	CHANGED INFORMATION	SERIAL No.
*3	G5	R742 100K → 620	UC:10006- J :20004- EK:30013-

Analog Monitor Communication
MOA-7A (for UC/EK)
MOA-7B (for J) BOARD (4/5)

BOARD NO. 1-649-765-11
DMX-B4008/B4016

4-22

MOA-7A/7B (5/5)
DMX-B4008/B4016 CONSOLE

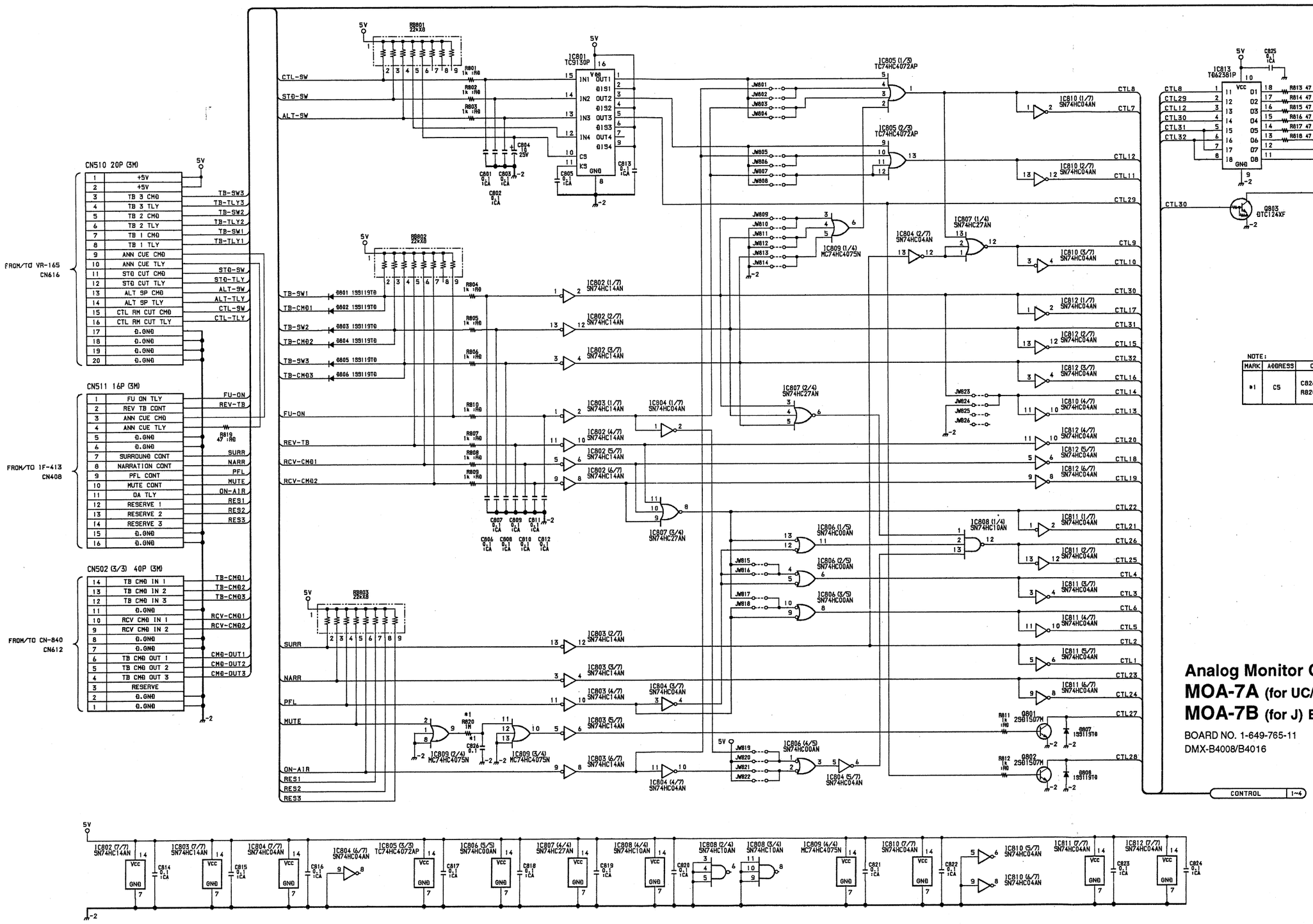

NOTE:

MARK	ADDRESS	CHANGED INFORMATION	SERIAL No.
*1	C5	C826 0.1μF → ADDITION R820 1M → ADDITION	UC:10003- J :20003- EK:30007-

Analog Monitor Communication
MOA-7A (for UC/EK)
MOA-7B (for J) BOARD (5/5)

BOARD NO. 1-649-765-11
DMX-B4008/B4016

4-23

KY-225 (1/5)
DMX-B4008/B4016 CONSOLE, DMBK-4010 (OPTION)

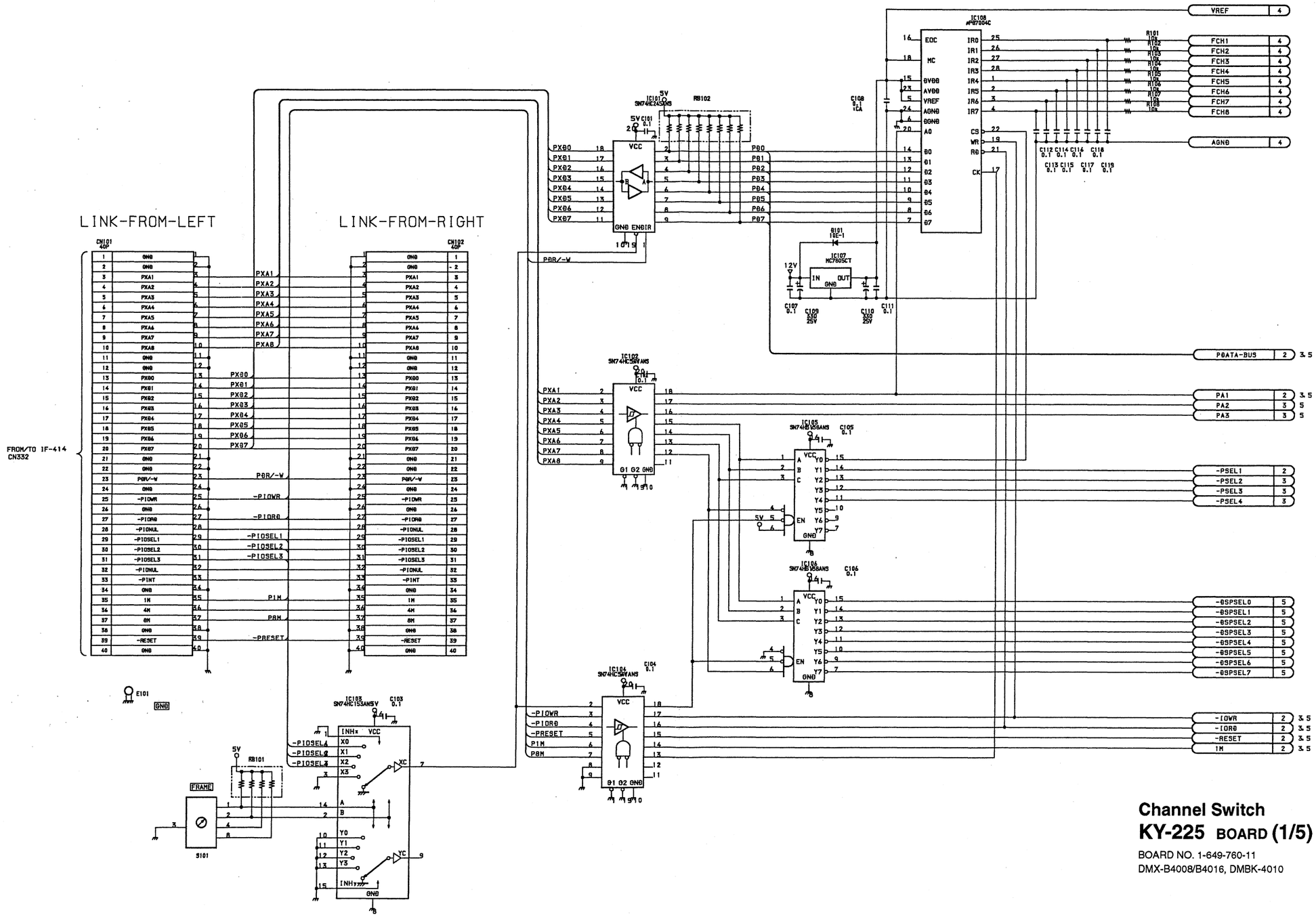

Channel Switch
KY-225 BOARD (1/5)

BOARD NO. 1-649-760-11
DMX-B4008/B4016, DMBK-4010

4-24

KY-225 (2/5)
DMX-B4008/B4016 CONSOLE, DMBK-4010 (OPTION)

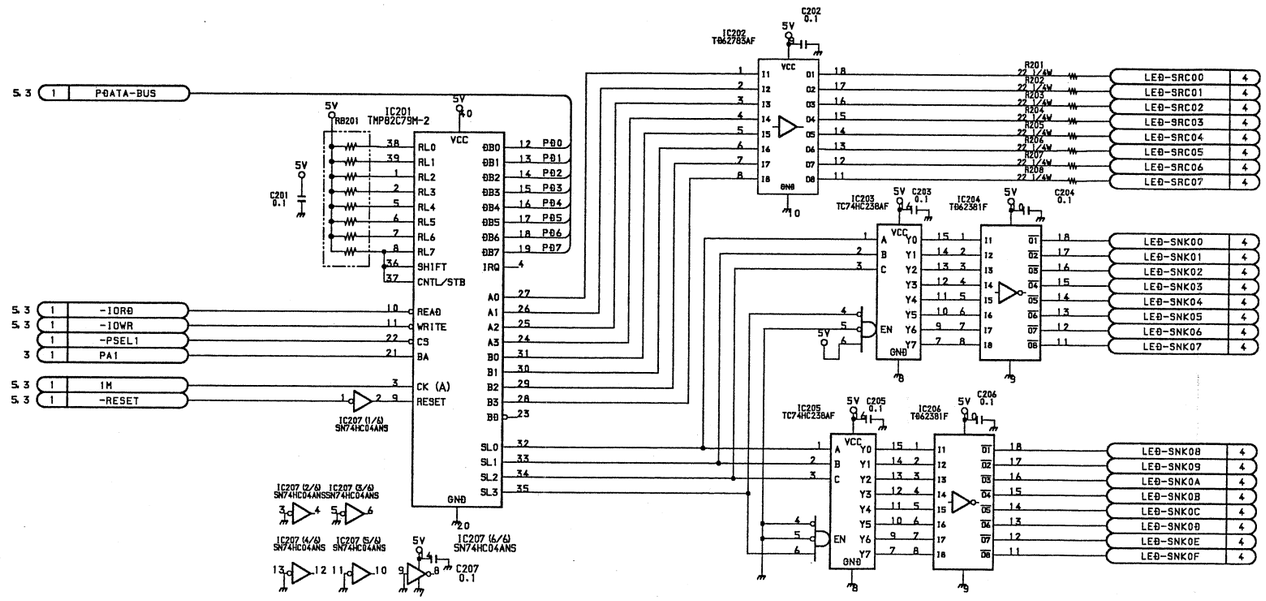

Channel Switch
KY-225 BOARD (2/5)

BOARD NO. 1-649-760-11
DMX-B4008/B4016, DMBK-4010

4-25

KY-225 (3/5)
DMX-B4008/B4016 CONSOLE, DMBK-4010 (OPTION)

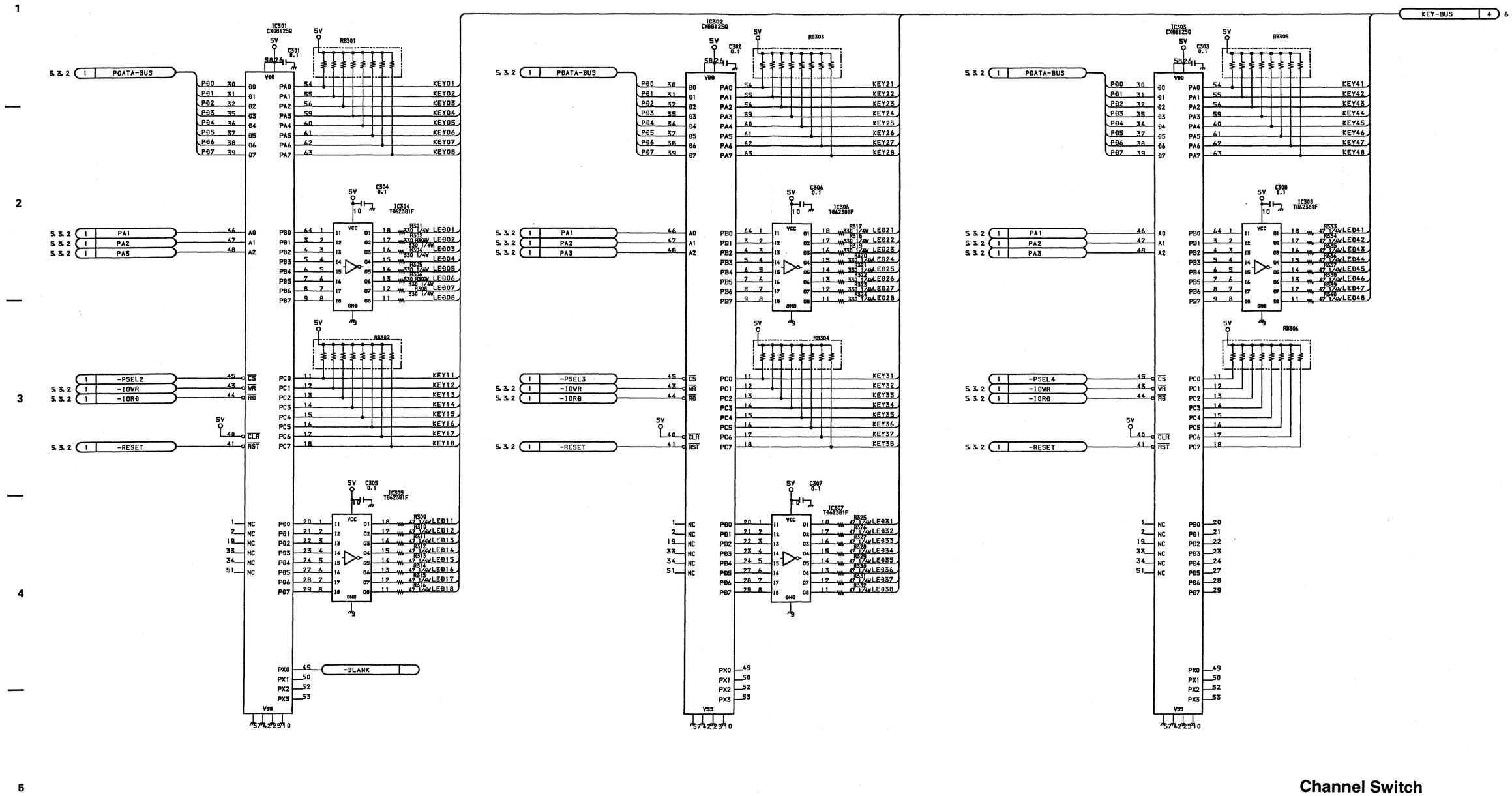

Channel Switch
KY-225 BOARD (3/5)

BOARD NO. 1-649-760-11
DMX-B4008/B4016, DMBK-4010

4-26

KY-225 (4/5), LED-156
DMX-B4008/B4016 CONSOLE, DMBK-4010 (OPTION)

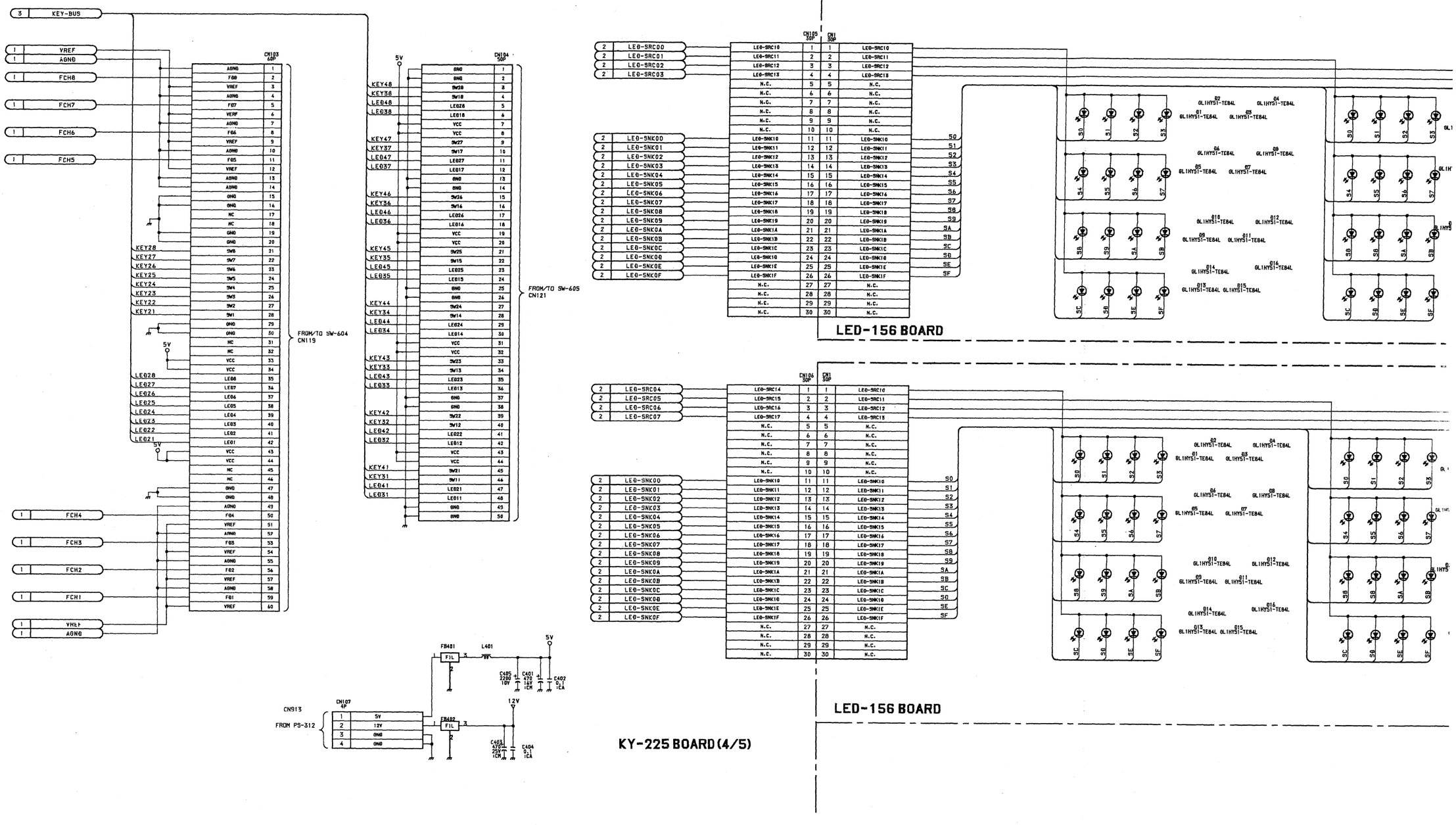

A B C D E F G H

KY-225 (4/5), LED-156
DMX-B4008/B4016 CONSOLE, DMBK-4010 (OPTION)

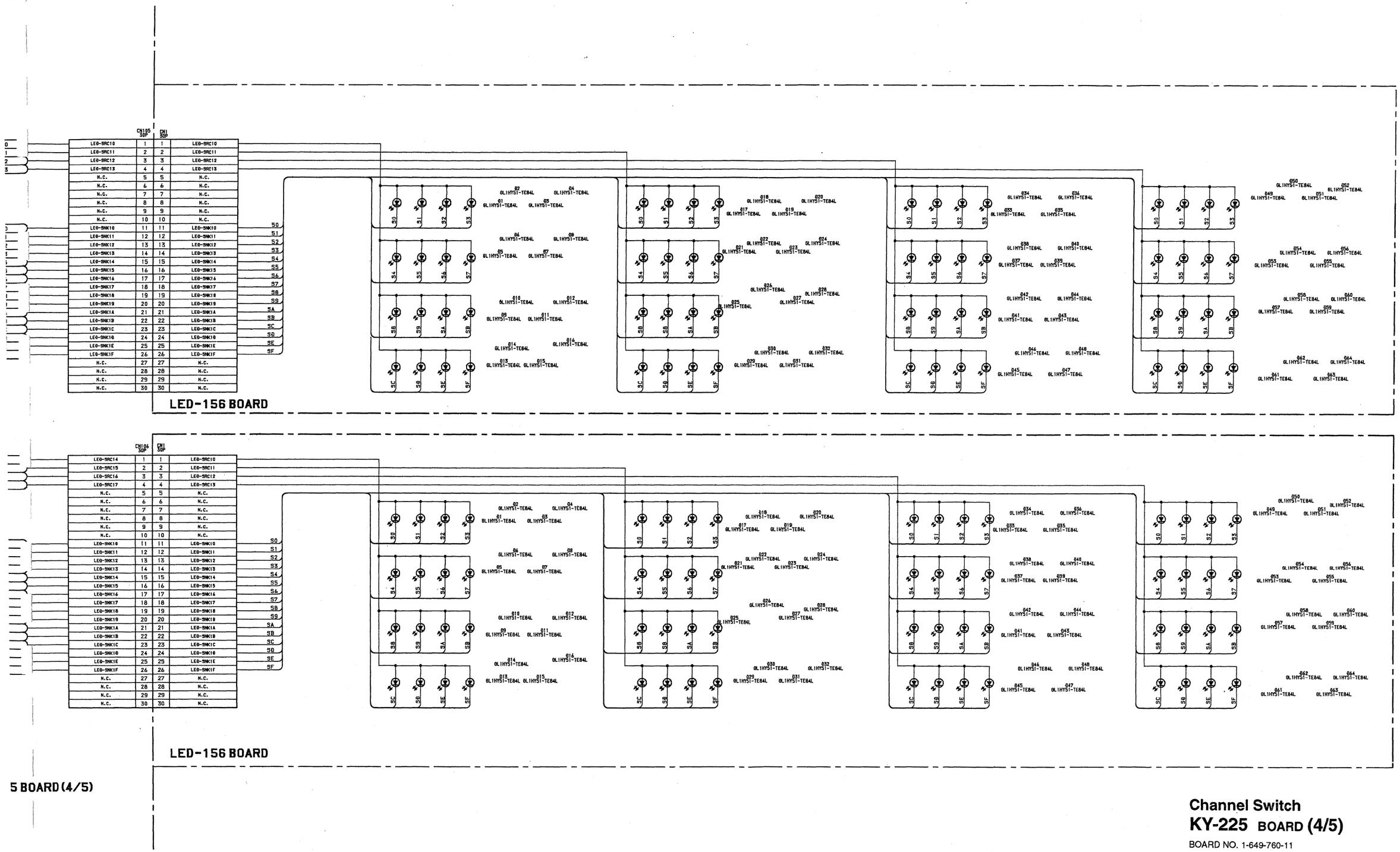

5 BOARD (4/5)

Channel Switch
KY-225 BOARD (4/5)

BOARD NO. 1-649-760-11

Channel Status LED
LED-156 BOARD

BOARD NO. 1-649-752-11
DMX-B4008/B4016, DMBK-4010

KY-225 (5/5)
DMX-B4008/B4016 CONSOLE, DMBK-4010 (OPTION)

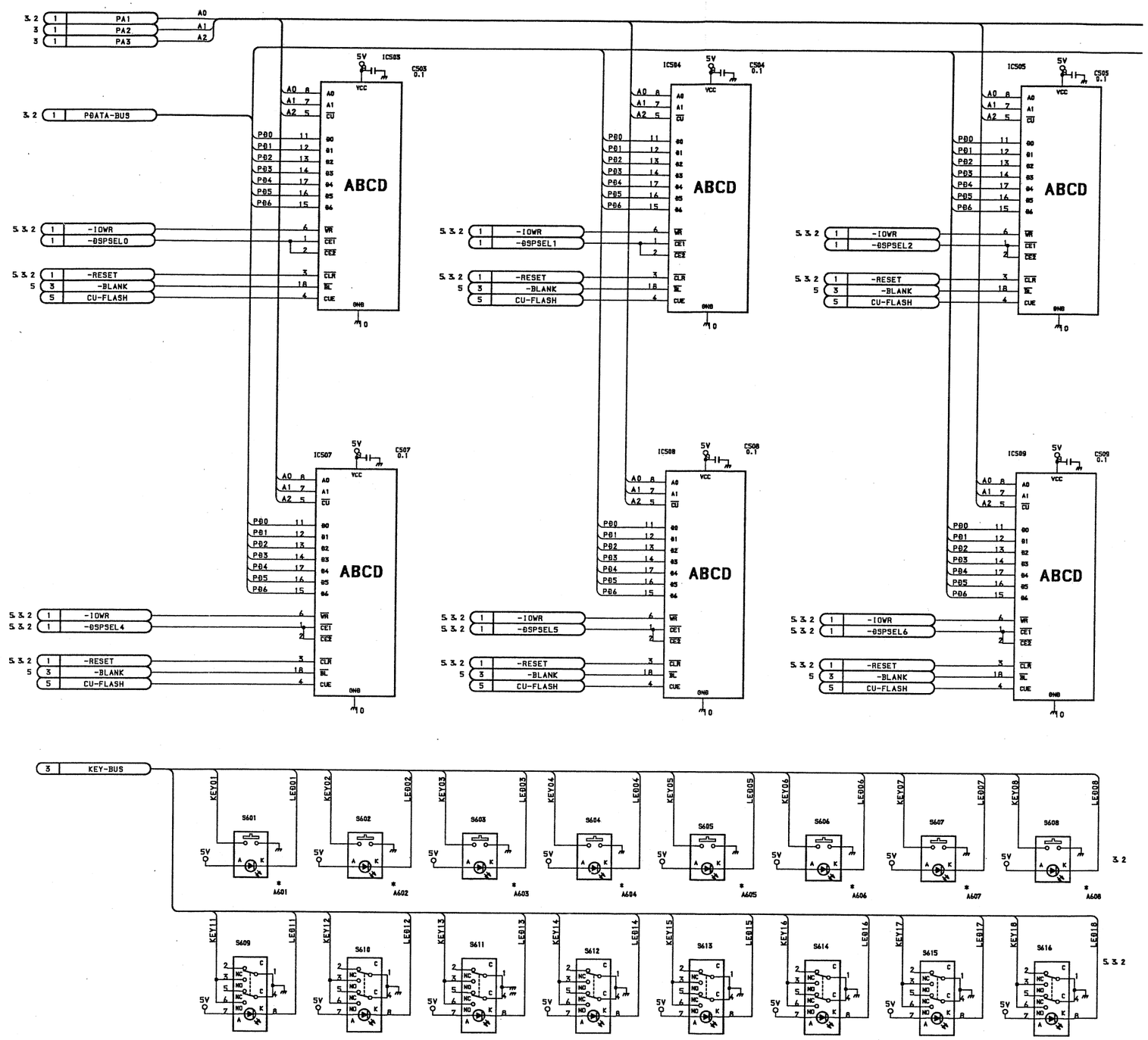

KY-225 (5/5)
DMX-B4008/B4016 CONSOLE, DMBK-4010 (OPTION)

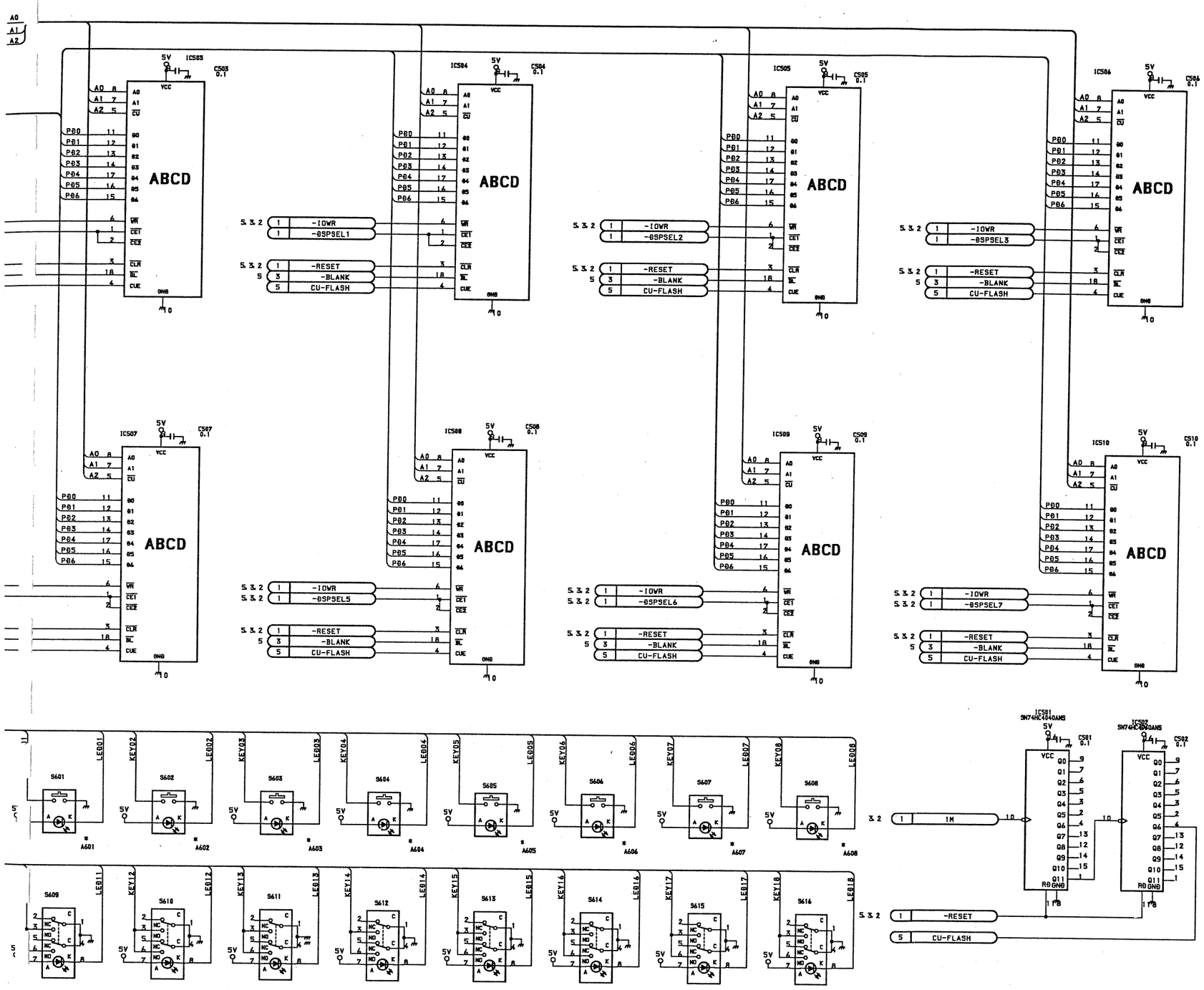

Channel Switch
KY-225 BOARD (5/5)

BOARD NO. 1-649-760-11
DMX-B4008/B4016, DMBK-4010

SW-604
DMX-B4008/B4016 CONSOLE, DMBK-4010 (OPTION)

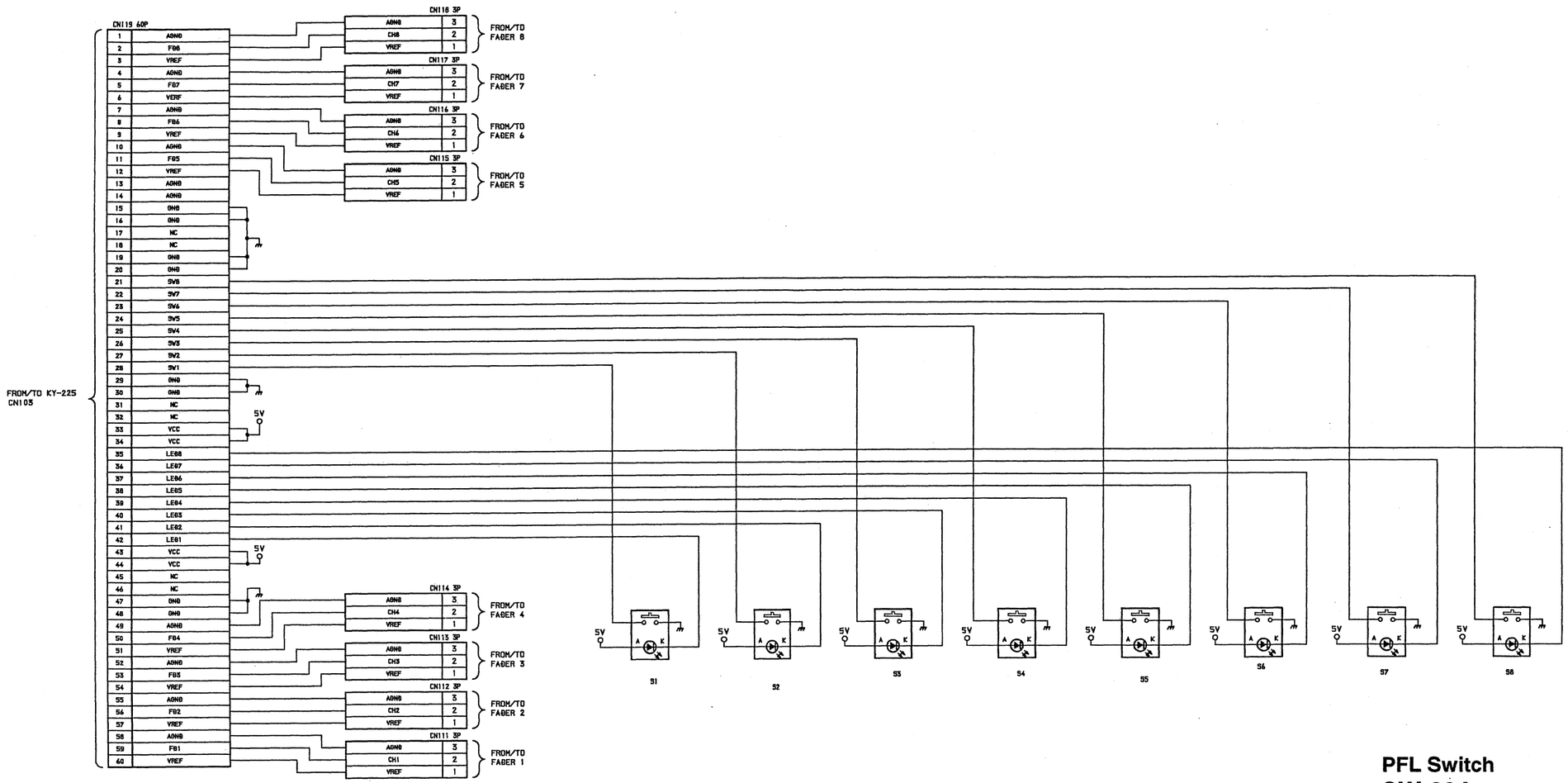

PFL Switch
SW-604 BOARD

BOARD NO. 1-649-761-11
DMX-B4008/B4016, DMBK-4010

4-29

SW-605
DMX-B4008/B4016 CONSOLE, DMBK-4010 (OPTION)

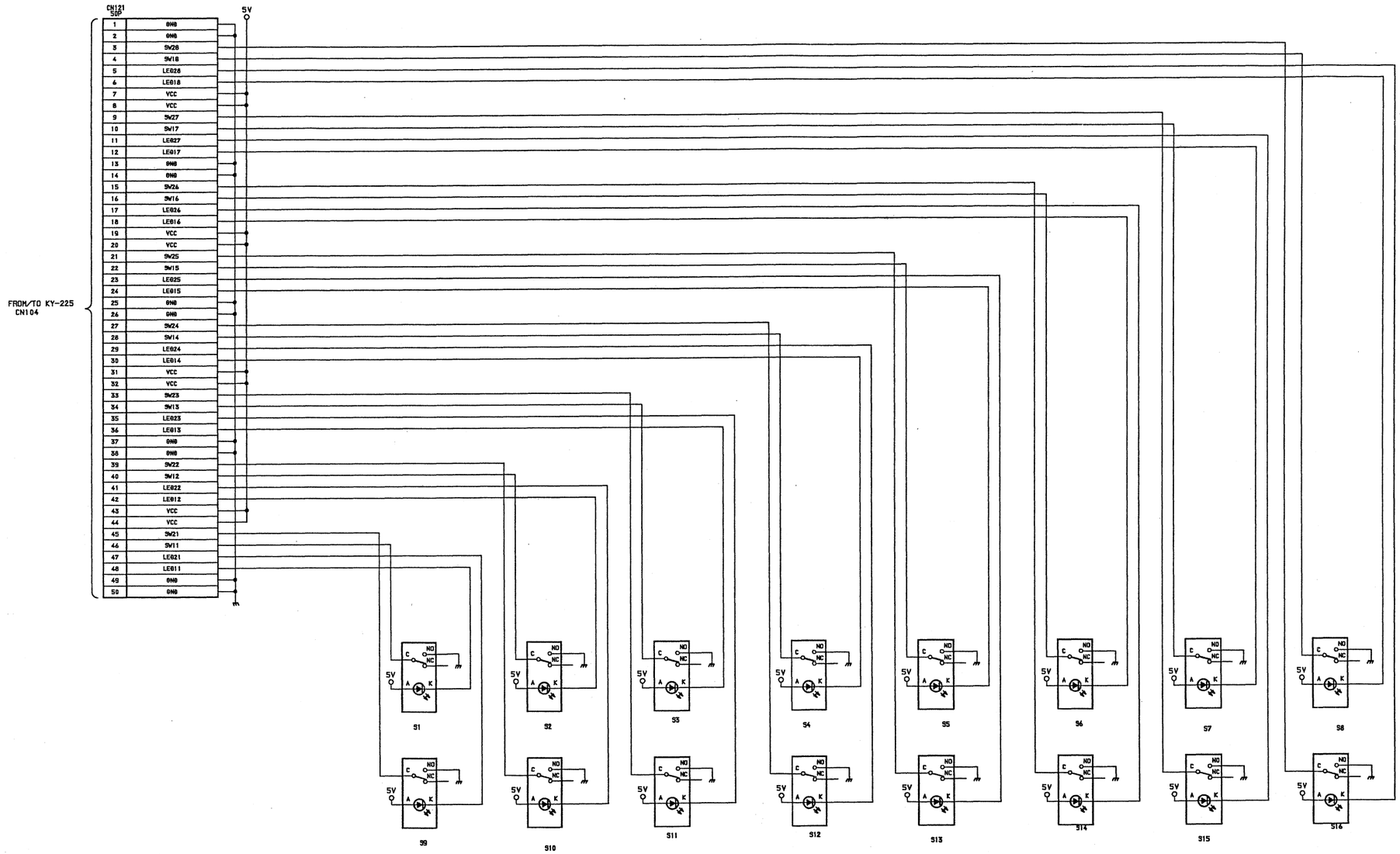

Start/Stop Switch
SW-605 BOARD

BOARD NO. 1-649-762-11
DMX-B4008/B4016, DMBK-4010

4-30

IF-421 (1/2)
DMX-B4008/B4016 METER UNIT

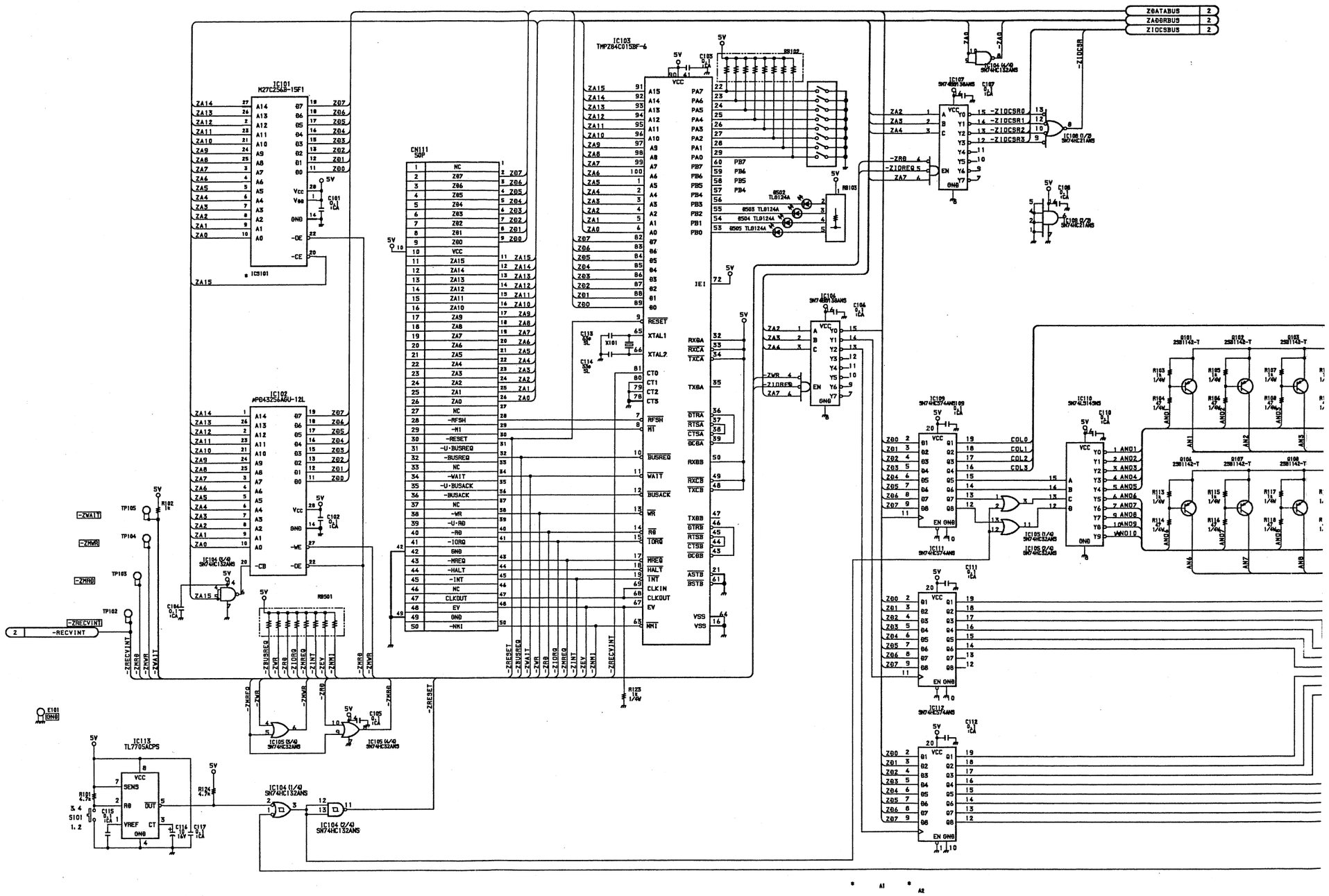

A | B | C | D | E | F | G | H

IF-421 (1/2)
DMX-B4008/B4016 METER UNIT

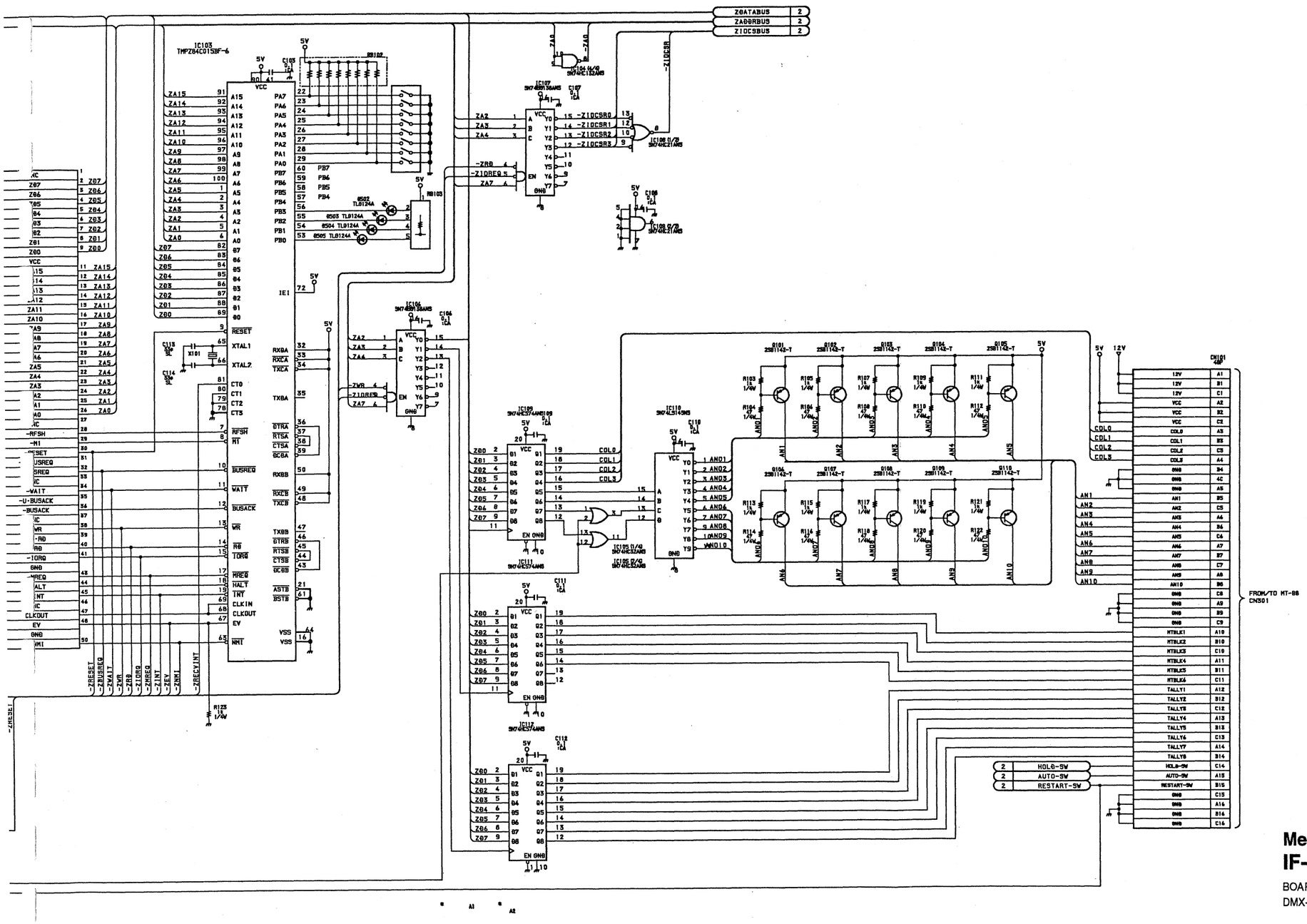

Meter Driver

IF-421 BOARD (1/2)

BOARD NO. 1-649-750-11
DMX-B4008/B4016

IF-421 (2/2)
DMX-B4008/B4016 METER UNIT

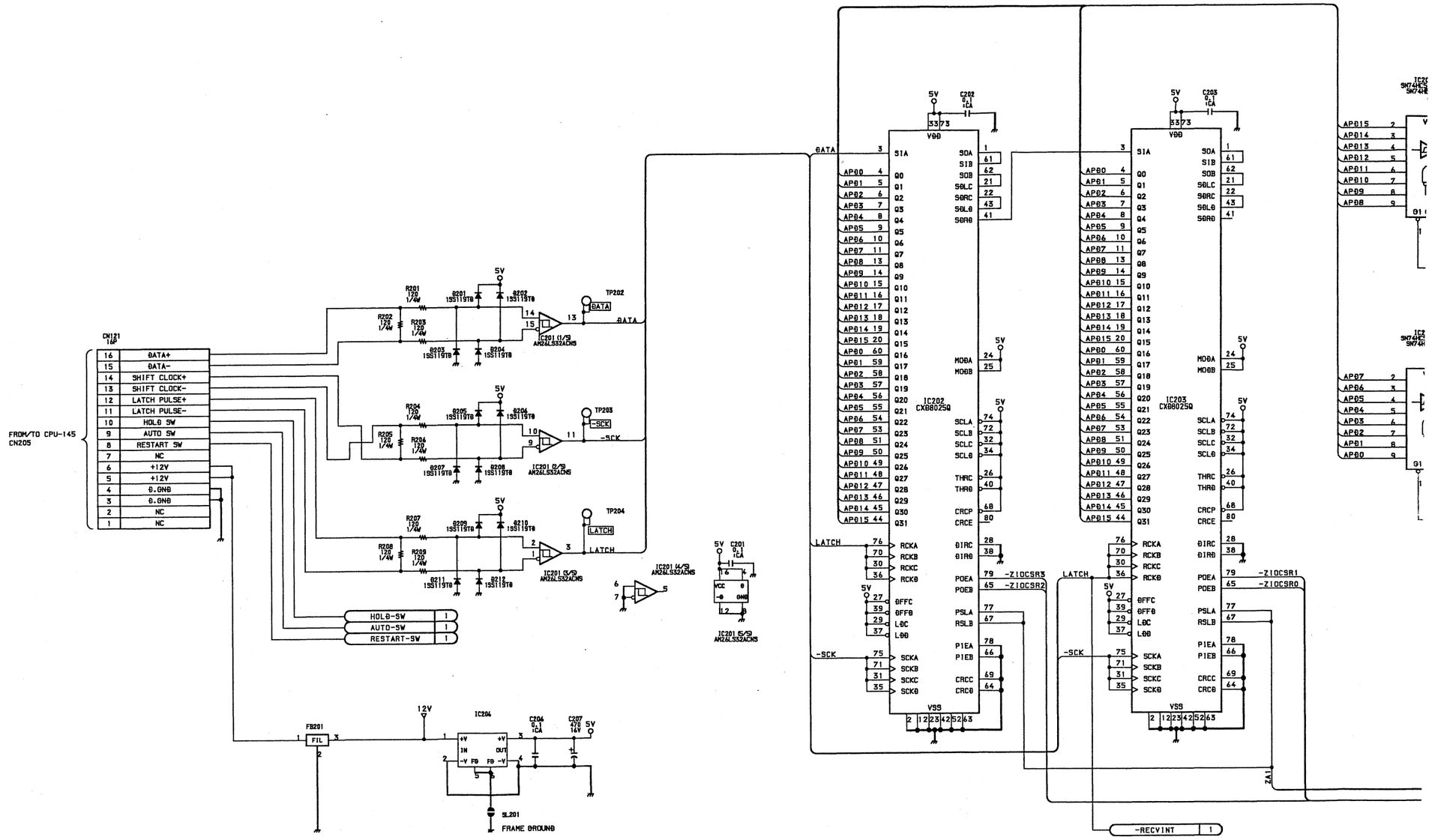

IF-421 (2/2)
DMX-B4008/B4016 METER UNIT

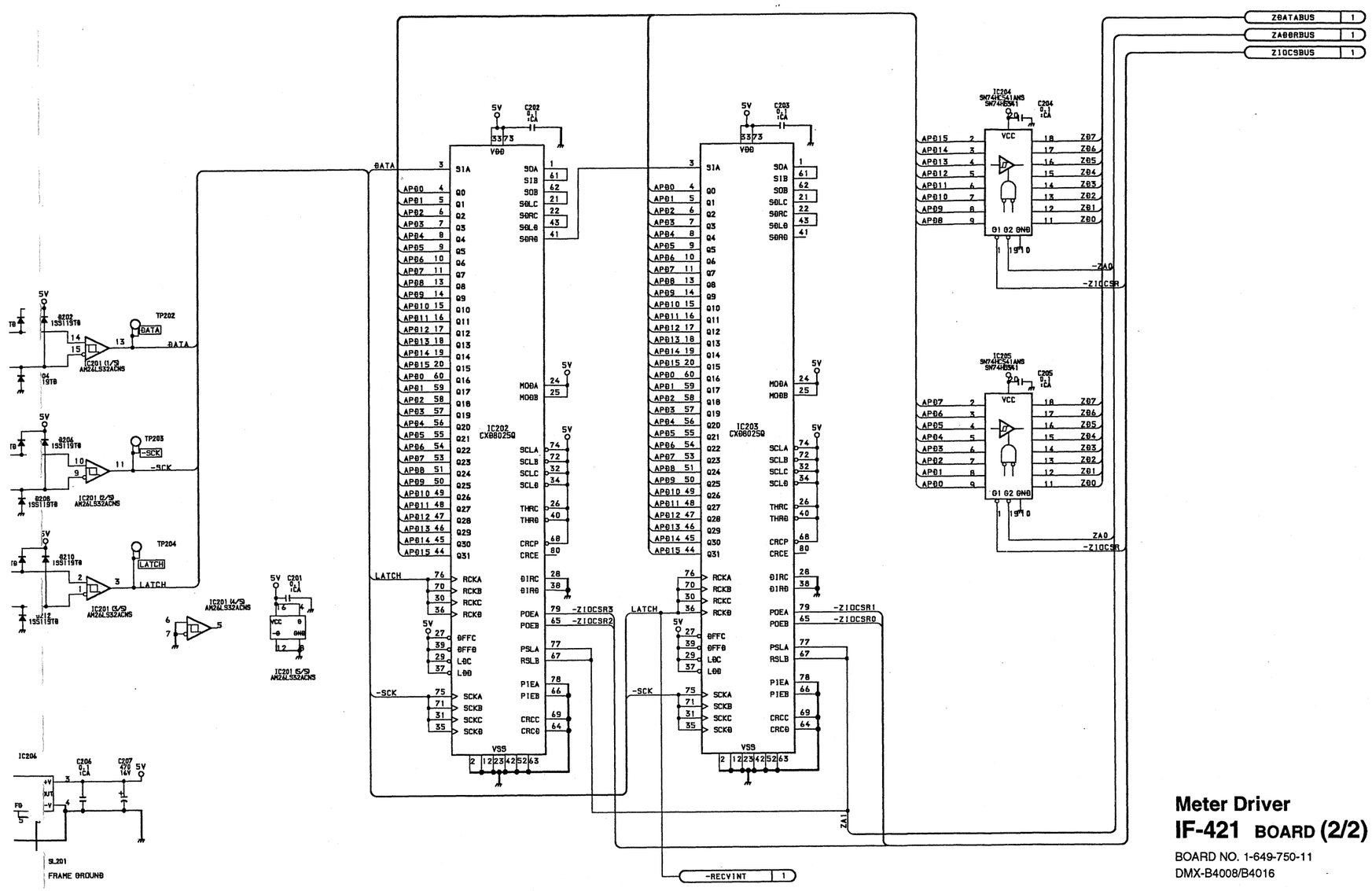

Meter Driver
IF-421 BOARD (2/2)

BOARD NO. 1-649-750-11
DMX-B4008/B4016

E F G H I J K L

MT-88
DMX-B4008/B4016 METER UNIT

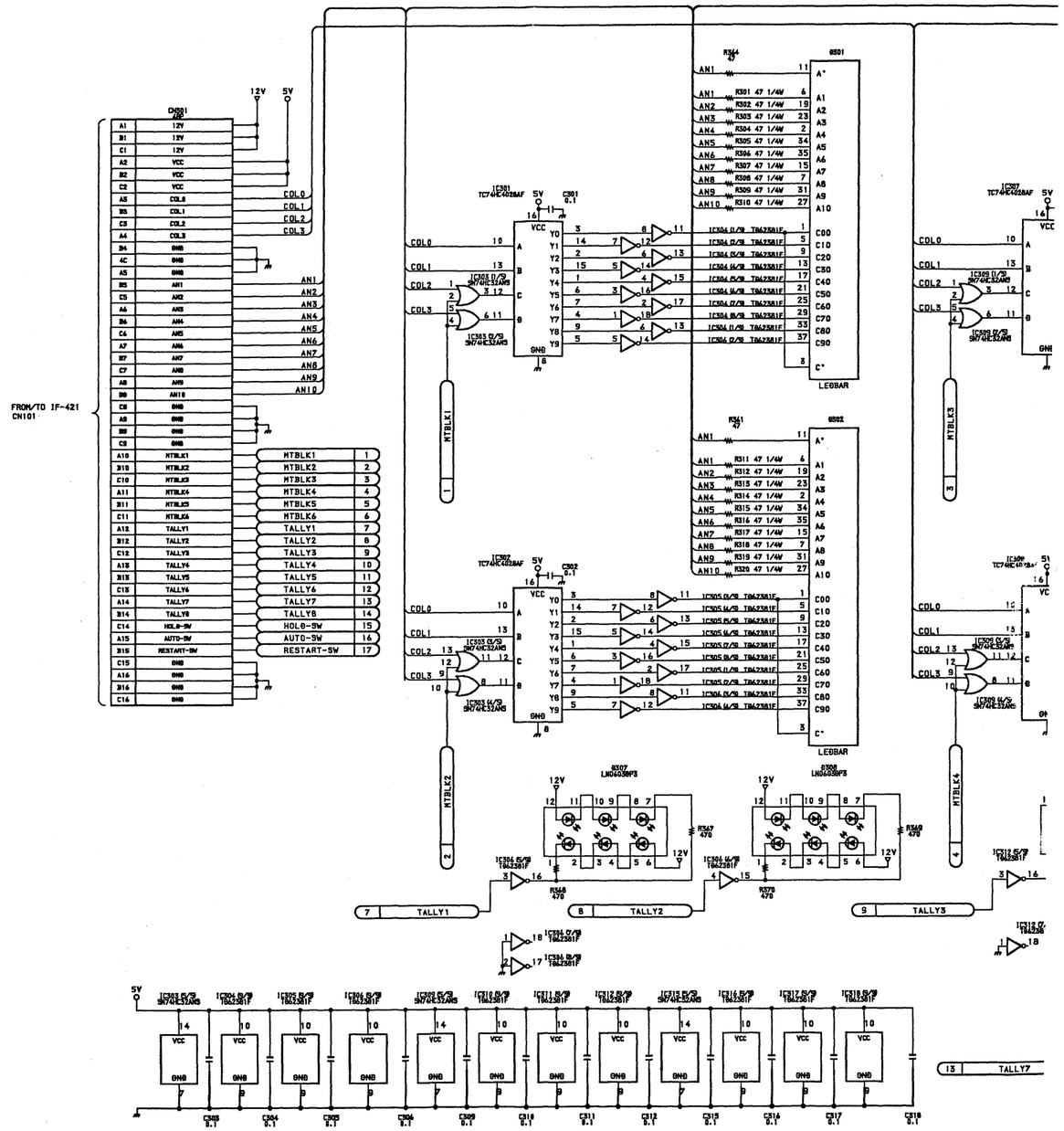

A | B | C | D | E | F | G | H

MT-88
DMX-B4008/B4016 METER UNIT

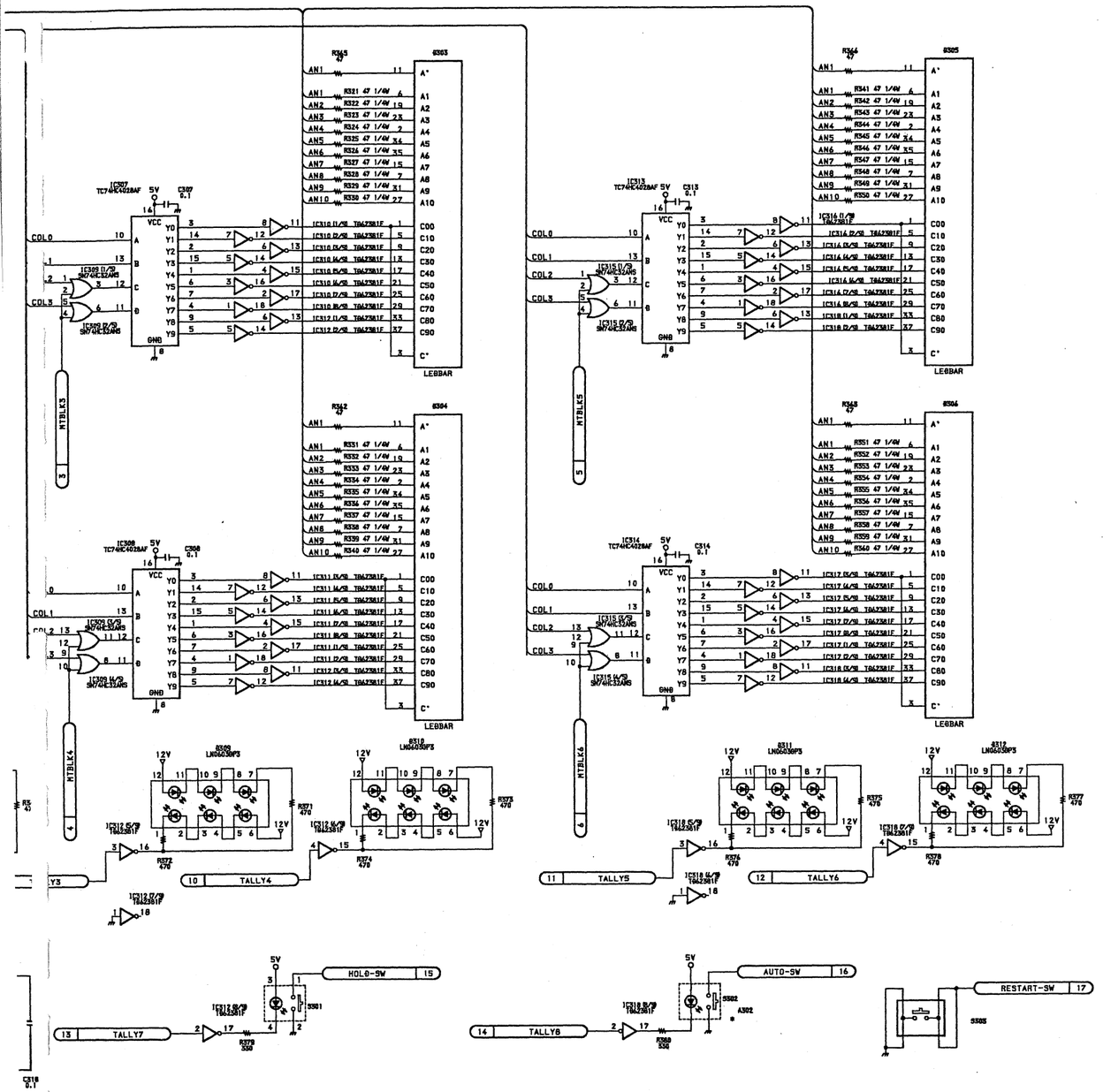

Meter LED
MT-88 BOARD

BOARD NO. 1-649-751-11
DMX-B4008/B4016

FRAME WIRING (1/5)
DMX-B4008/B4016 CONSOLE/METER UNIT

FRAME WIRING (1/5)
DMX-B4008/B4016 CONSOLE/METER UNIT

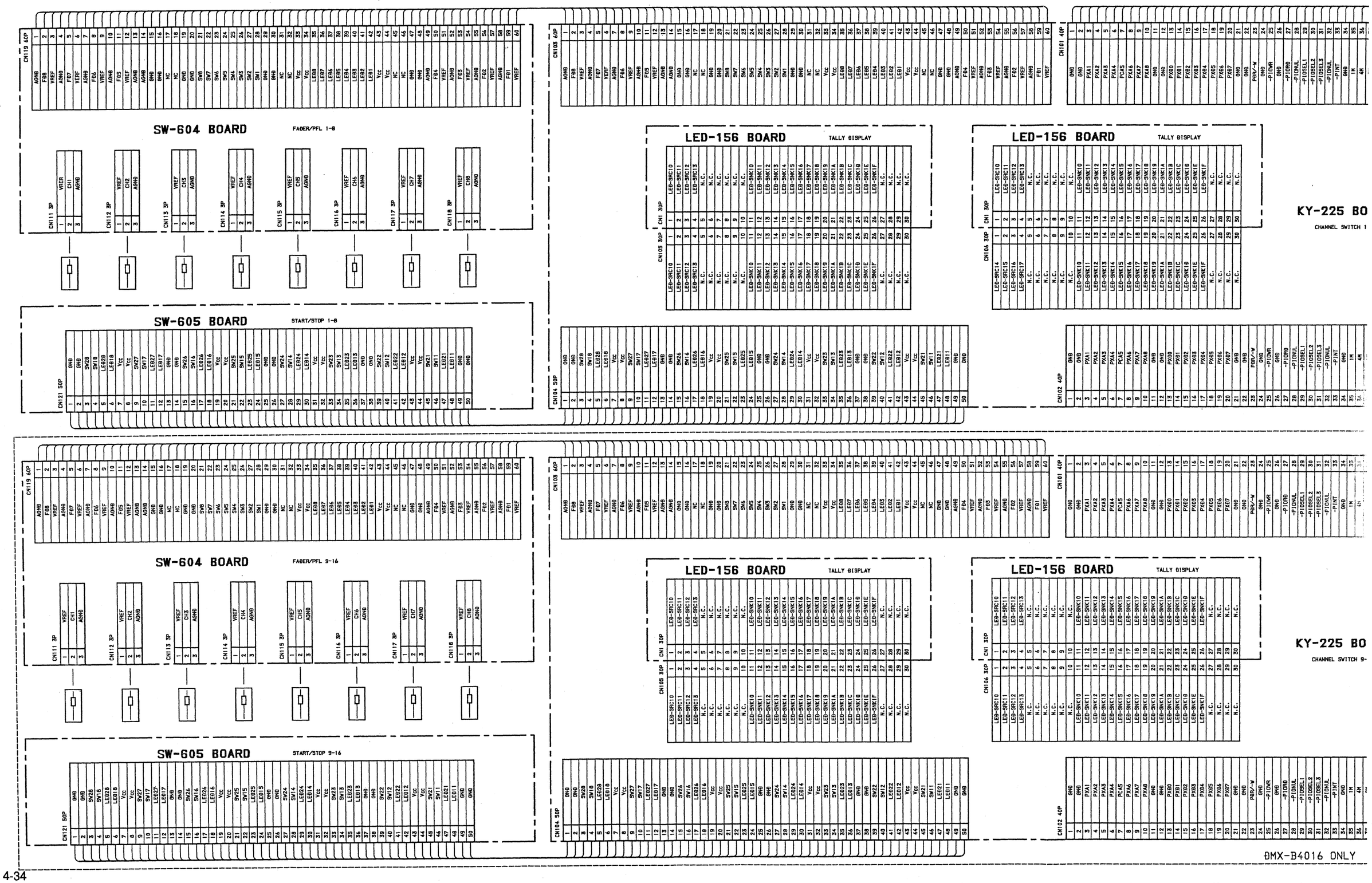

FRAME WIRING (1/5)
DMX-B4008/B4016 CONSOLE/METER UNIT

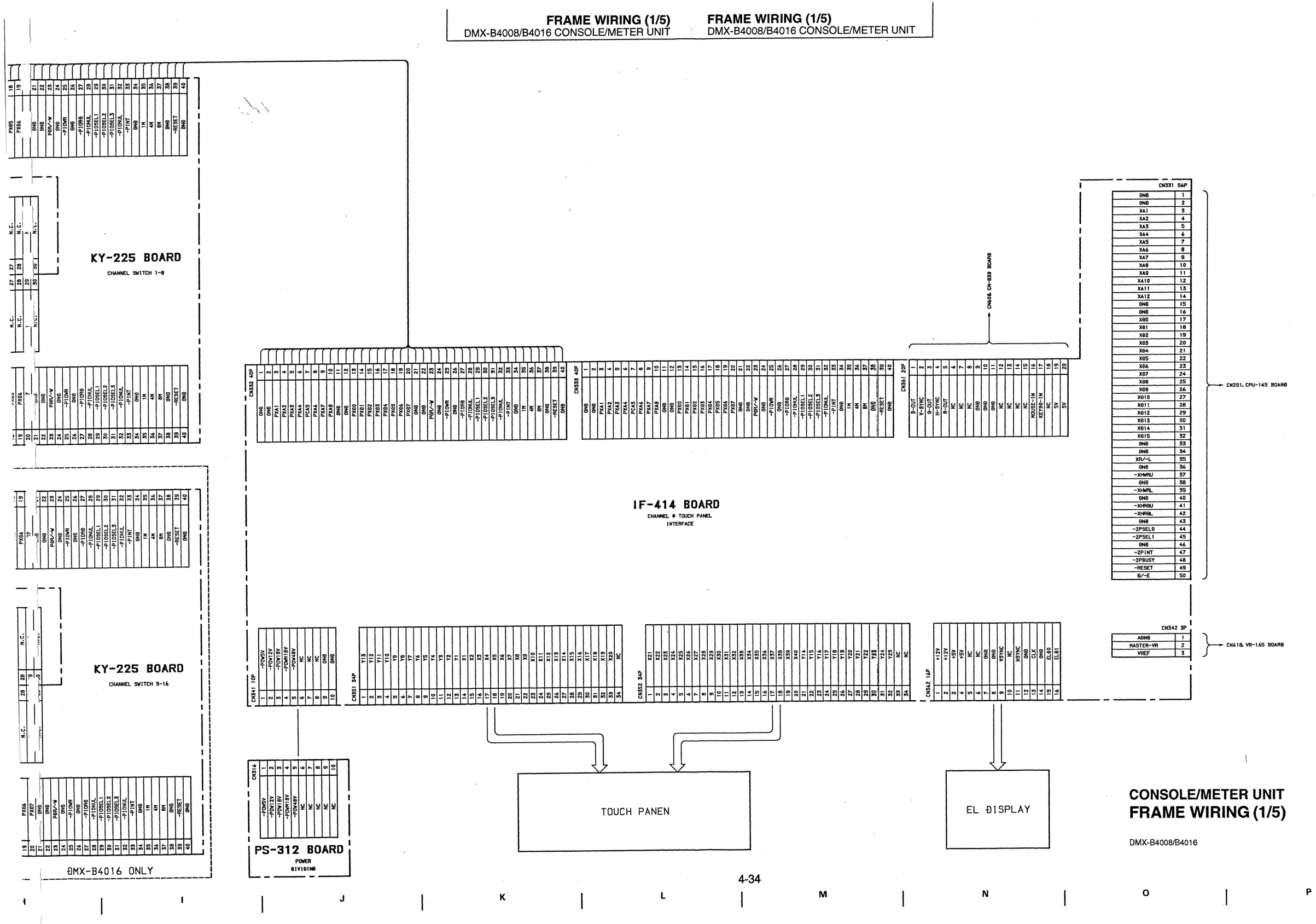

CONSOLE/METER UNIT
FRAME WIRING (1/5)

DMX-B4008/B4016

FRAME WIRING (2/5) CN-838
DMX-B4008/B4016 CONSOLE/METER UNIT

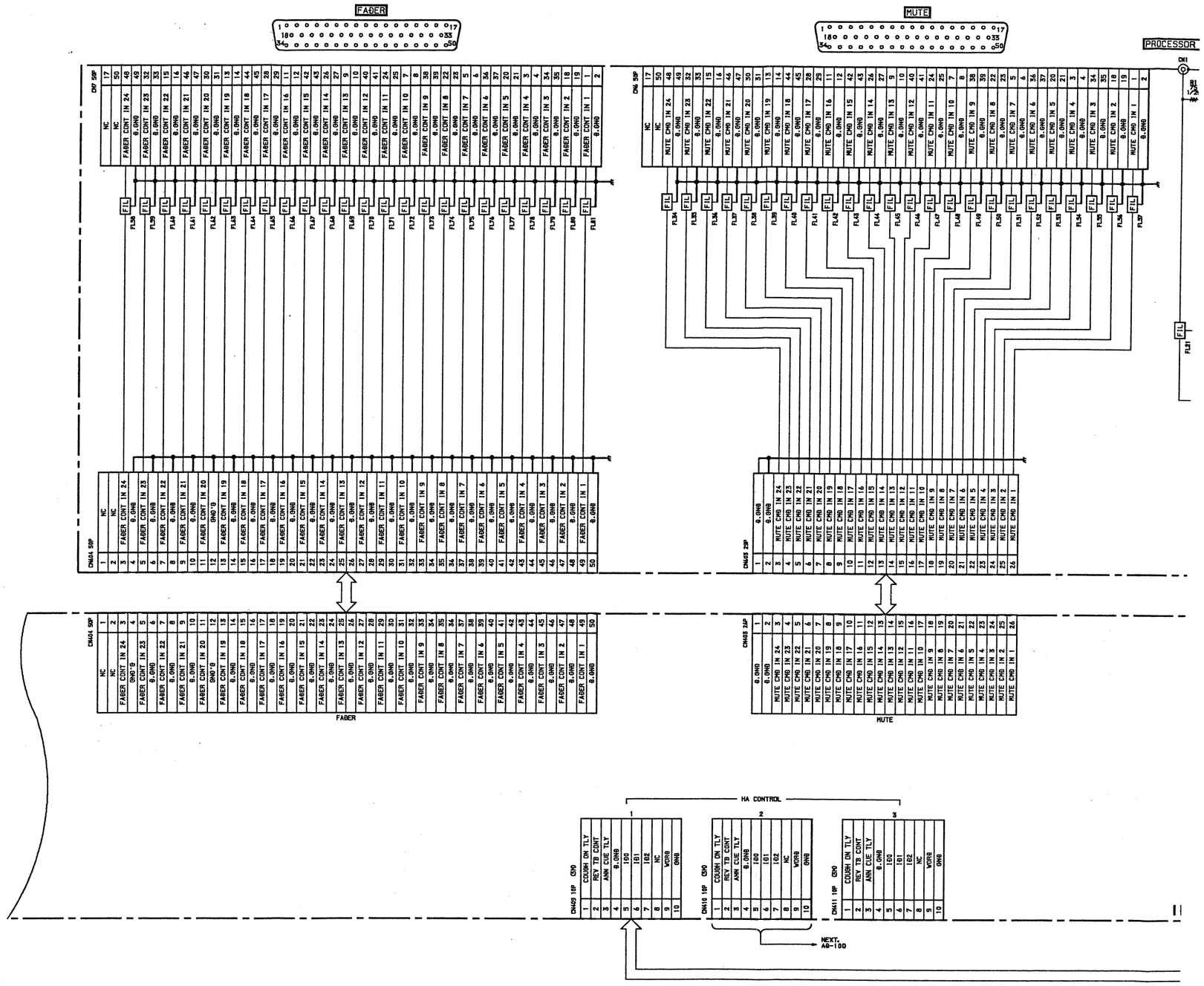

A | B | C | D | E | F | G | H

FRAME WIRING (2/5) CN-838
DMX-B4008/B4016 CONSOLE/METER UNIT

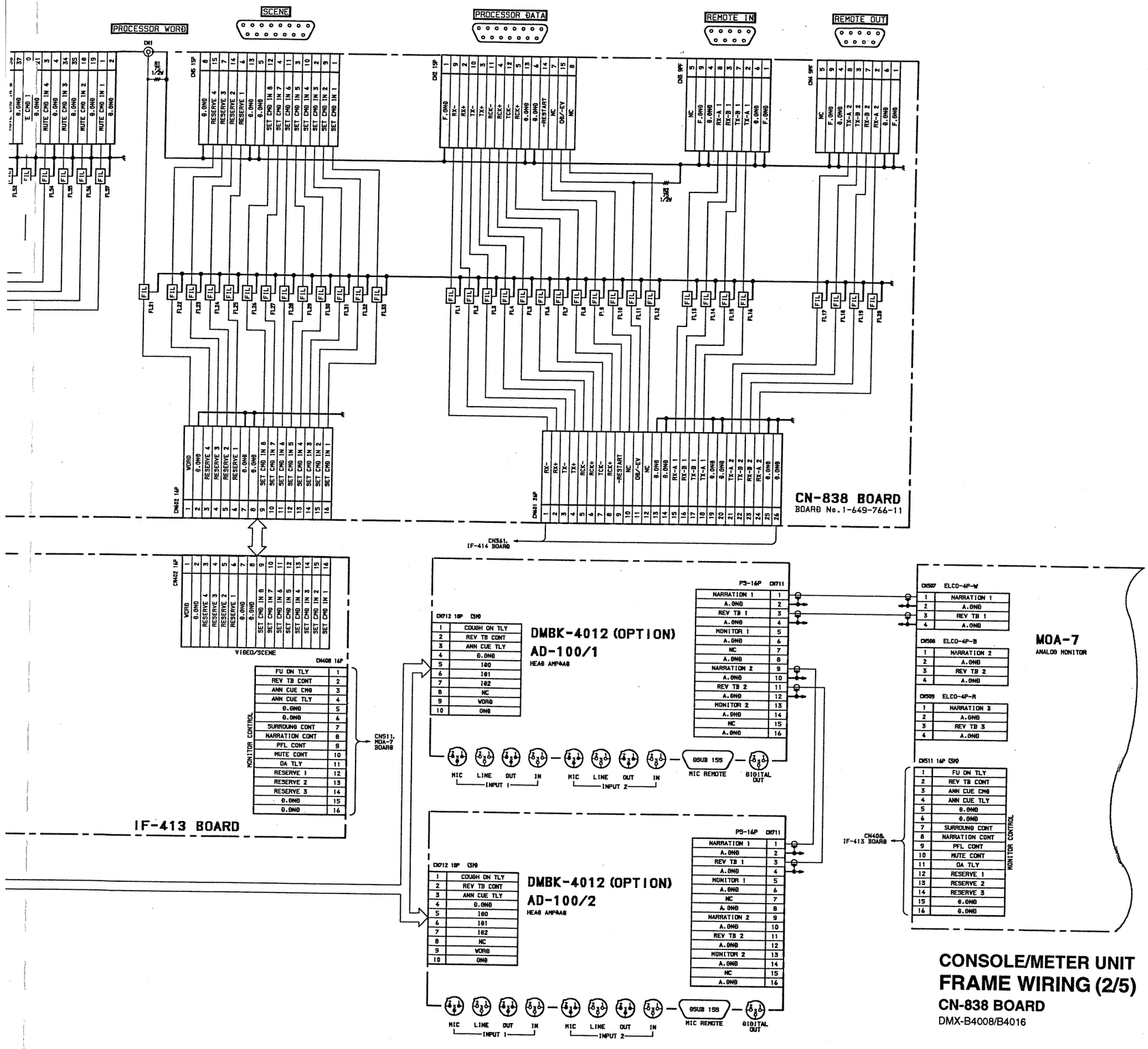

CONSOLE/METER UNIT
FRAME WIRING (2/5)
CN-838 BOARD
DMX-B4008/B4016

FRAME WIRING (3/5) CN-839, MT-94
DMX-B4008/B4016 CONSOLE/METER UNIT

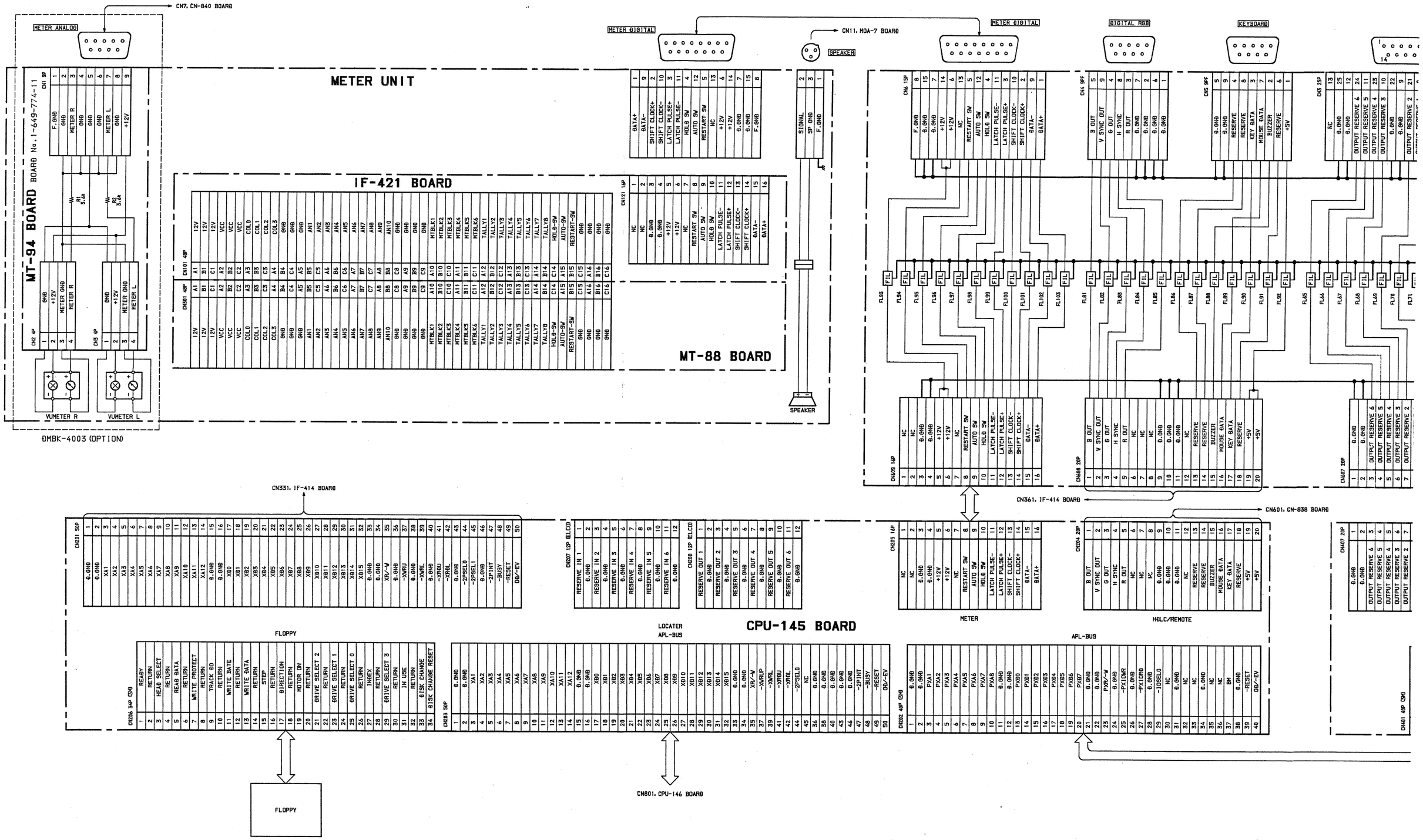

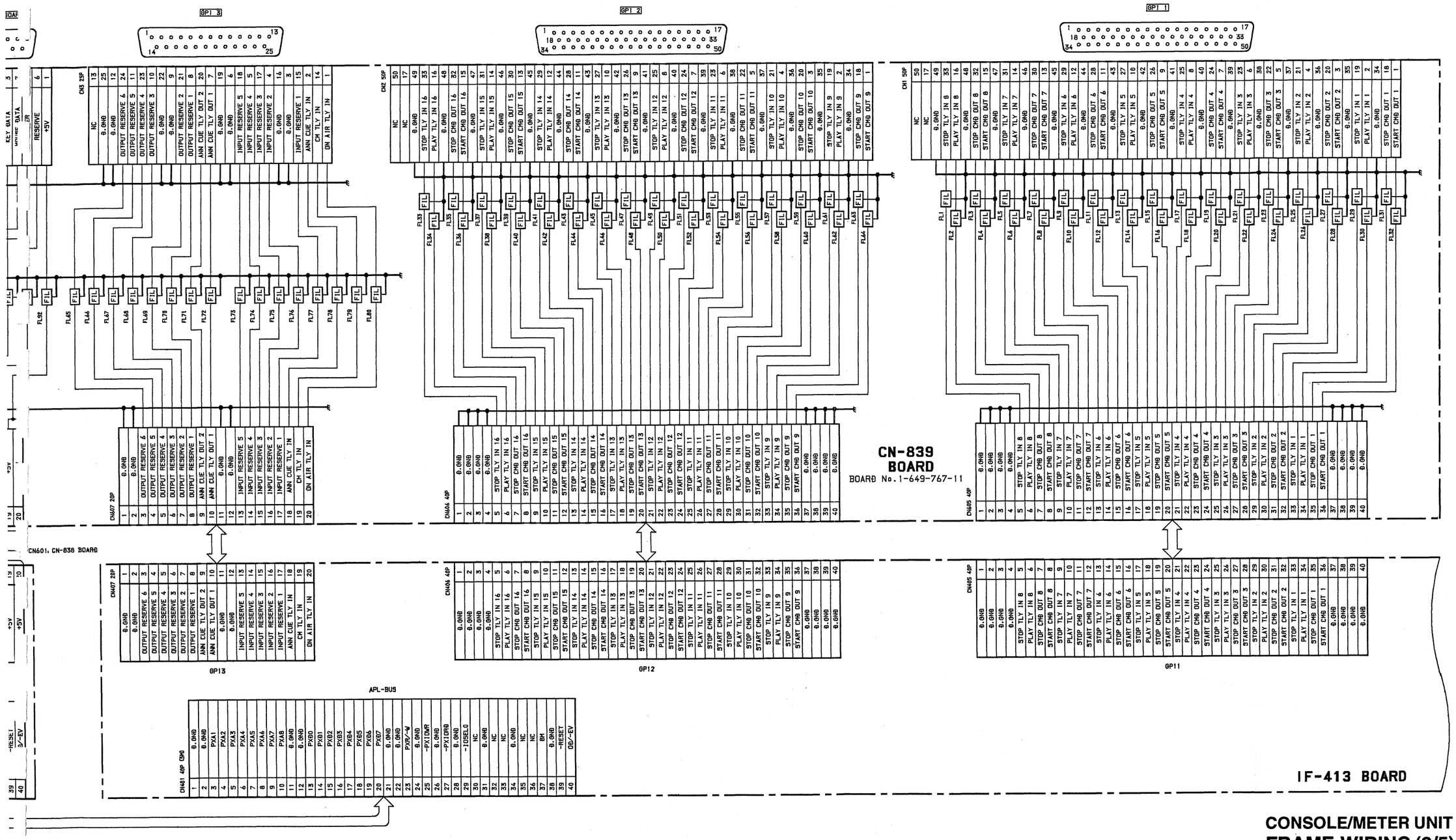

CONSOLE/METER UNIT
FRAME WIRING (3/5)
CN-839, MT-94 BOARD
DMX-B4008/B4016

FRAME WIRING (4/5) CN-840A/B, CN-841, SW-606, VR-165
DMX-B4008/B4016 CONSOLE/METER UNIT

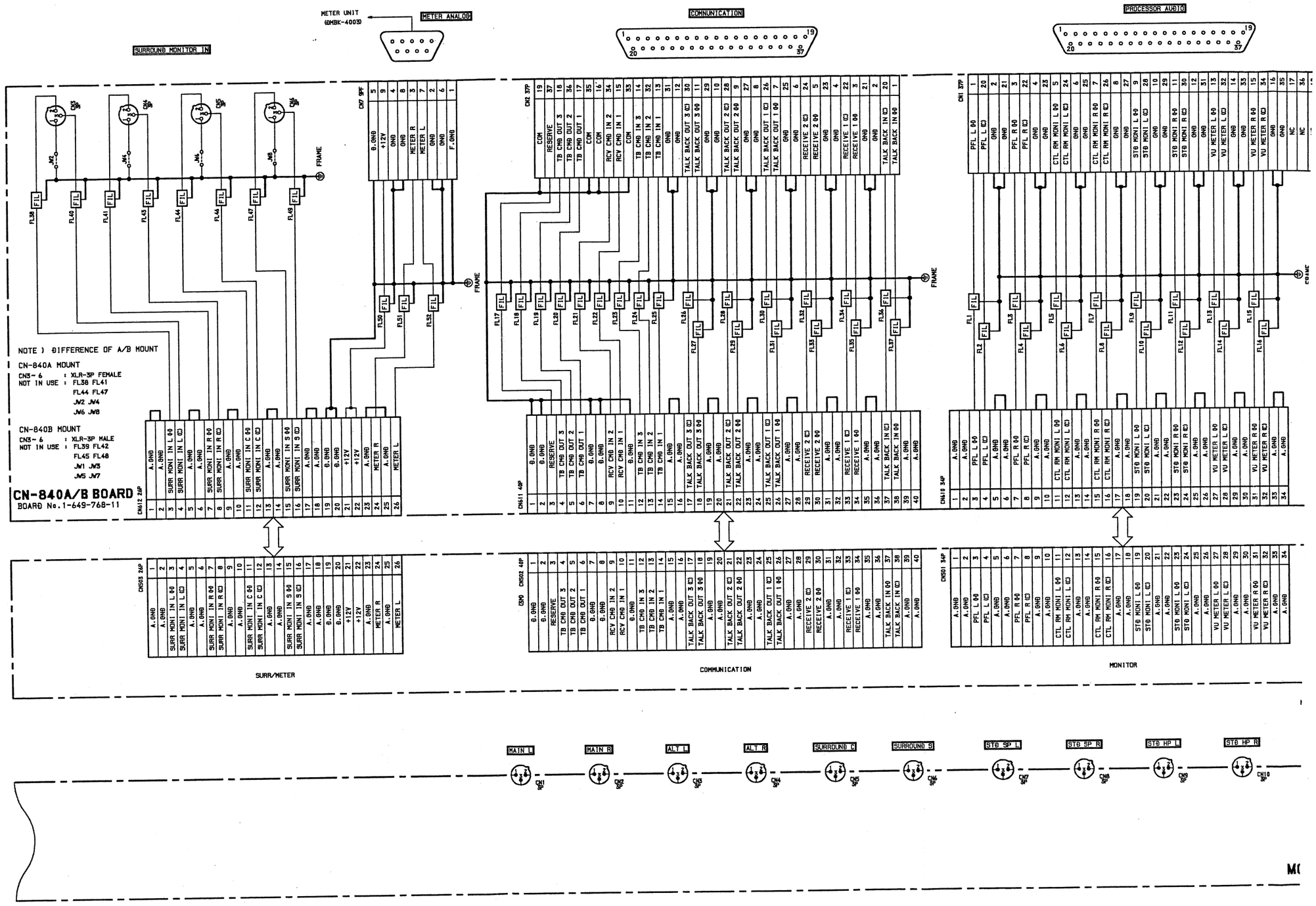

FRAME WIRING (4/5) CN-840A/B, CN-841, SW-606, VR-165
DMX-B4008/B4016 CONSOLE/METER UNIT

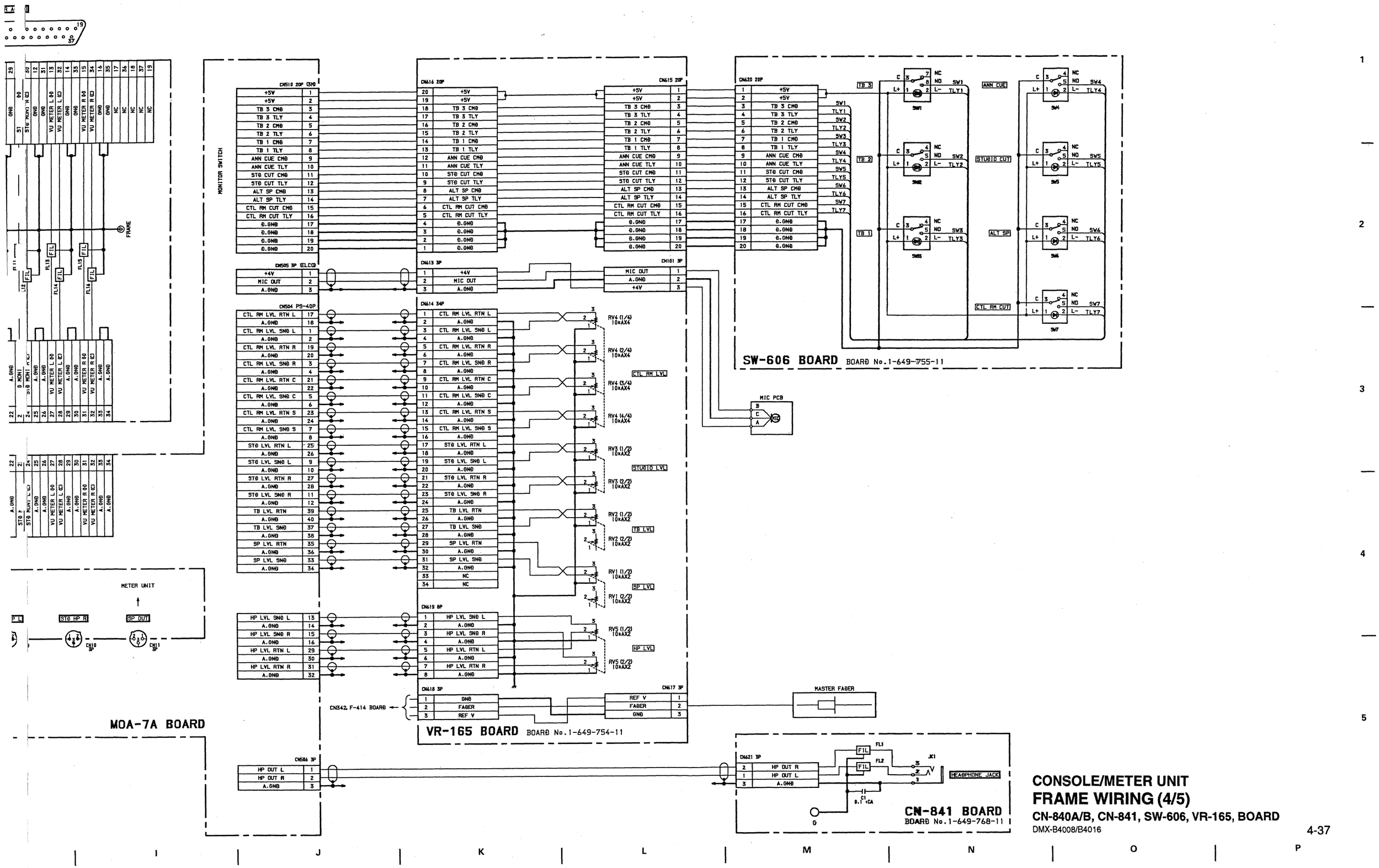

CONSOLE/METER UNIT
FRAME WIRING (4/5)
CN-840A/B, CN-841, SW-606, VR-165, BOARD
DMX-B4008/B4016

FRAME WIRING (5/5) PS-312
DMX-B4008/B4016 CONSOLE/METER UNIT

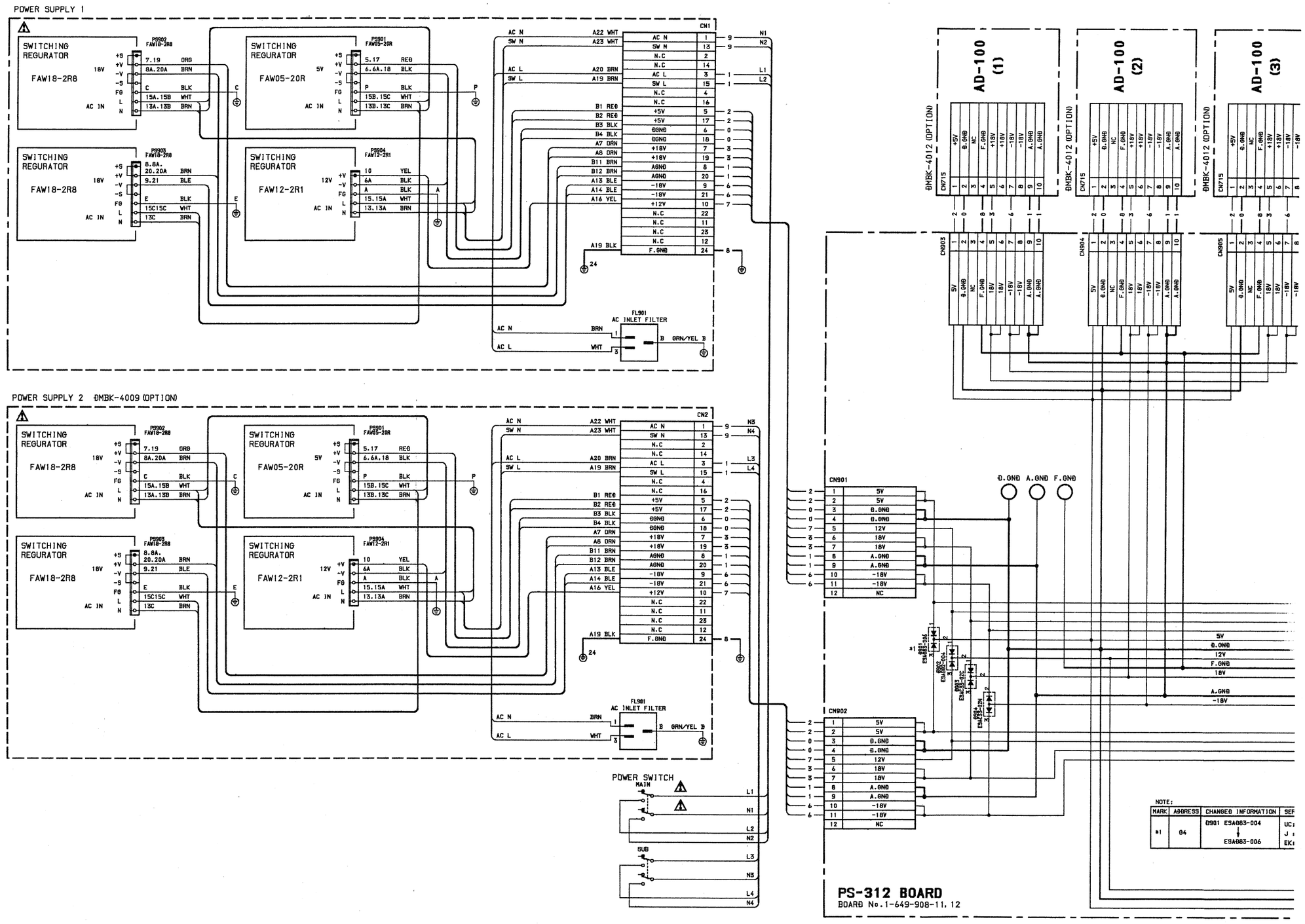

FRAME WIRING (5/5) PS-312
DMX-B4008/B4016 CONSOLE/METER UNIT

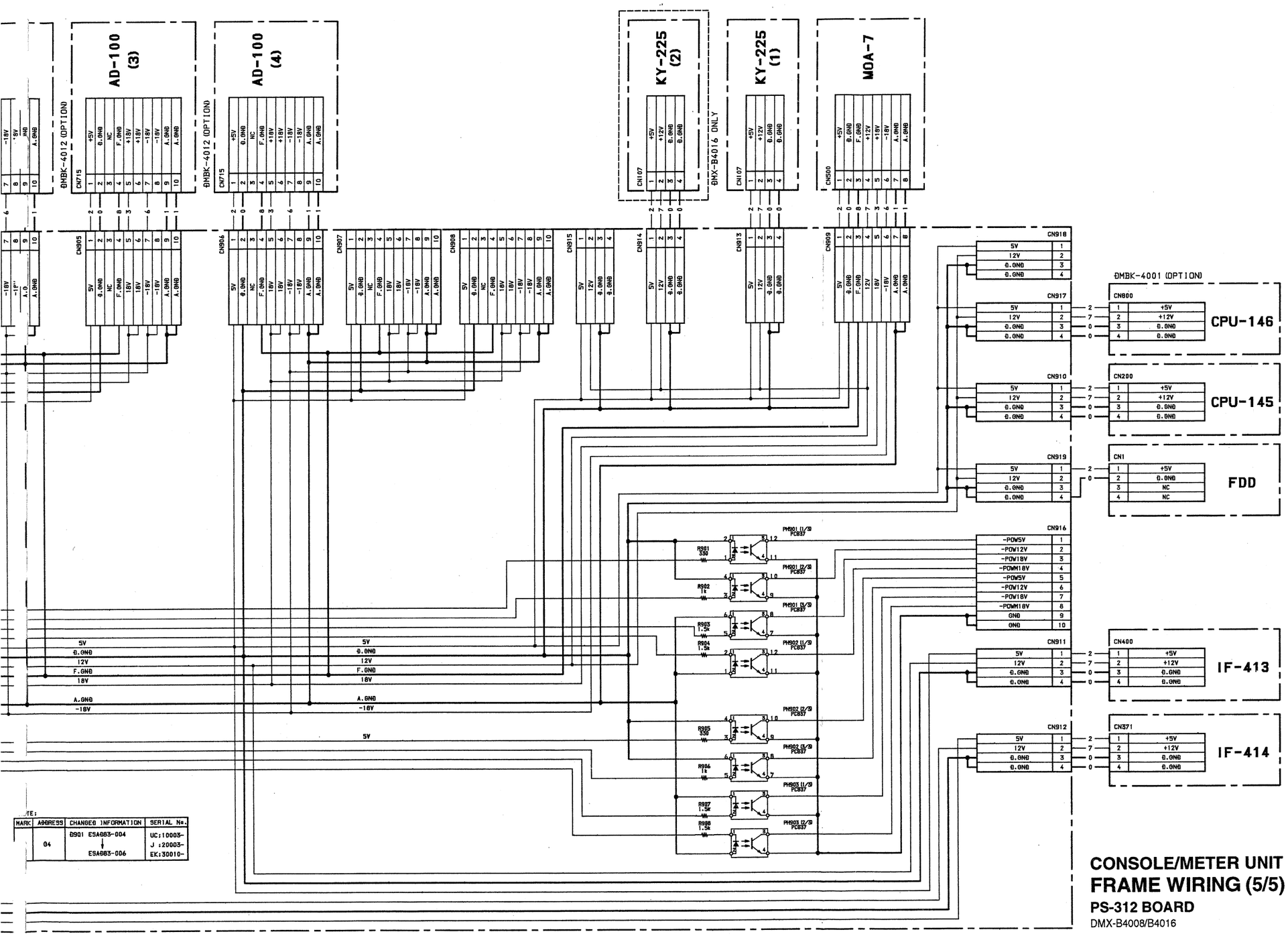

MARK	ADDRESS	CHANGED INFORMATION	SERIAL No.
	04	D901 ESA083-004 ↓ ESA083-006	UC:10003- J :20003- EK:30010-

CONSOLE/METER UNIT
FRAME WIRING (5/5)
PS-312 BOARD
DMX-B4008/B4016

I J K L M N O P

4-2. DMX-B4008 PROCESSOR

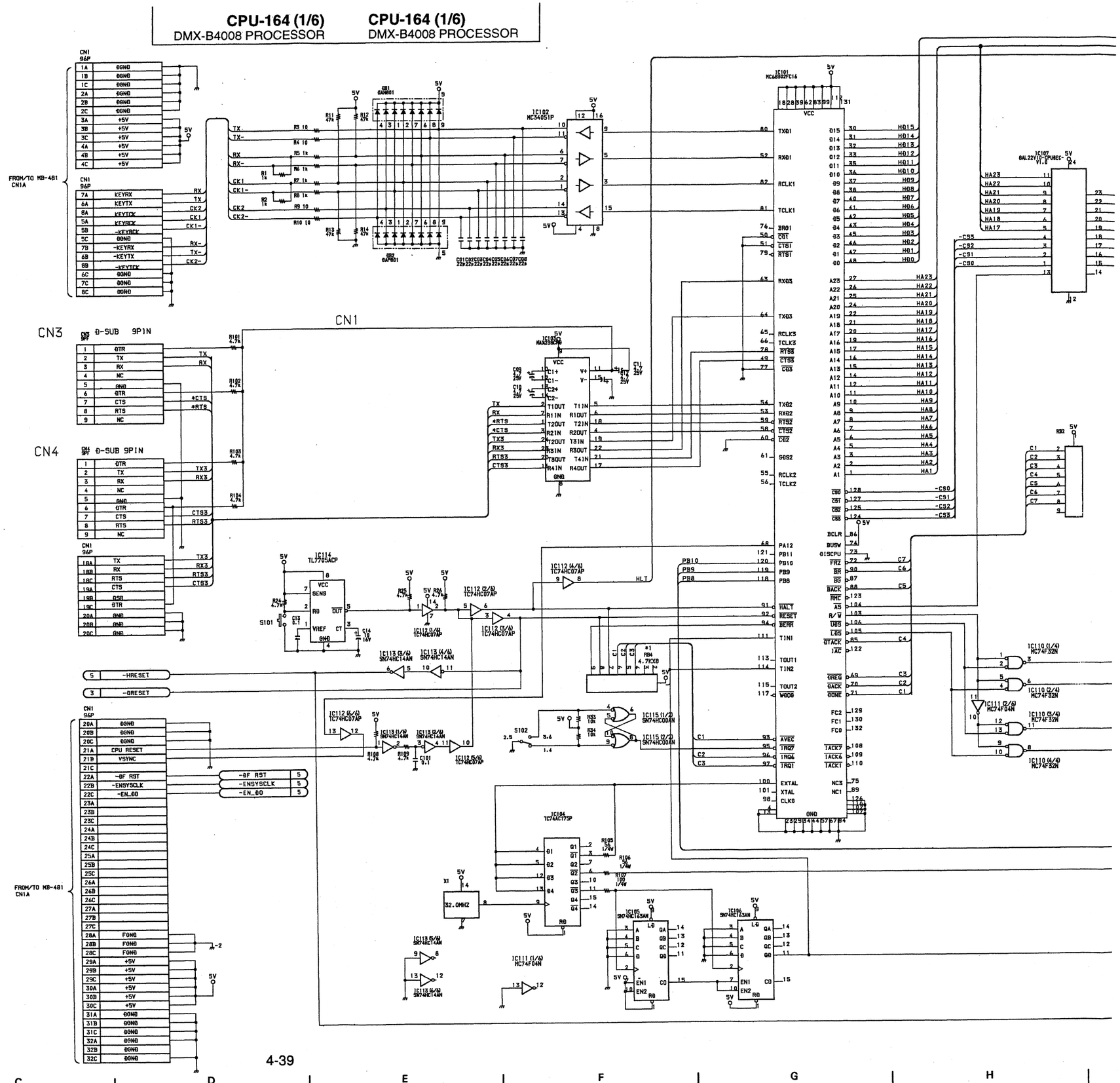

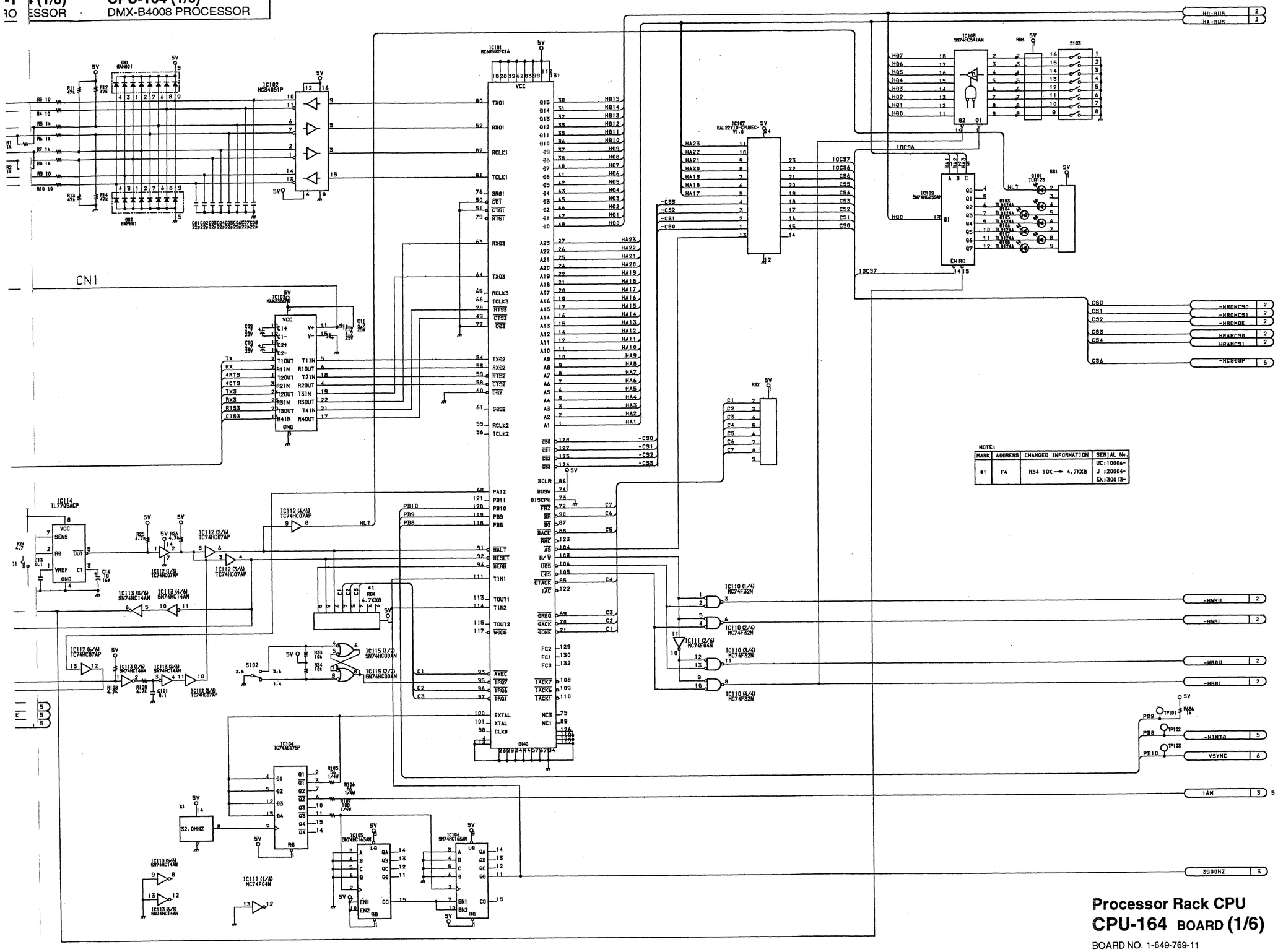

NOTE:

MARK	ADDRESS	CHANGED INFORMATION	SERIAL No.
*1	F4	RB4 10K → 4.7KX8	UC:10006- J :20004- EK:30013-

Processor Rack CPU

CPU-164 BOARD (1/6)

BOARD NO. 1-649-769-11
DMX-B4008

CPU-164 (2/6)
DMX-B4008 PROCESSOR
CPU-164
DMX-B4008

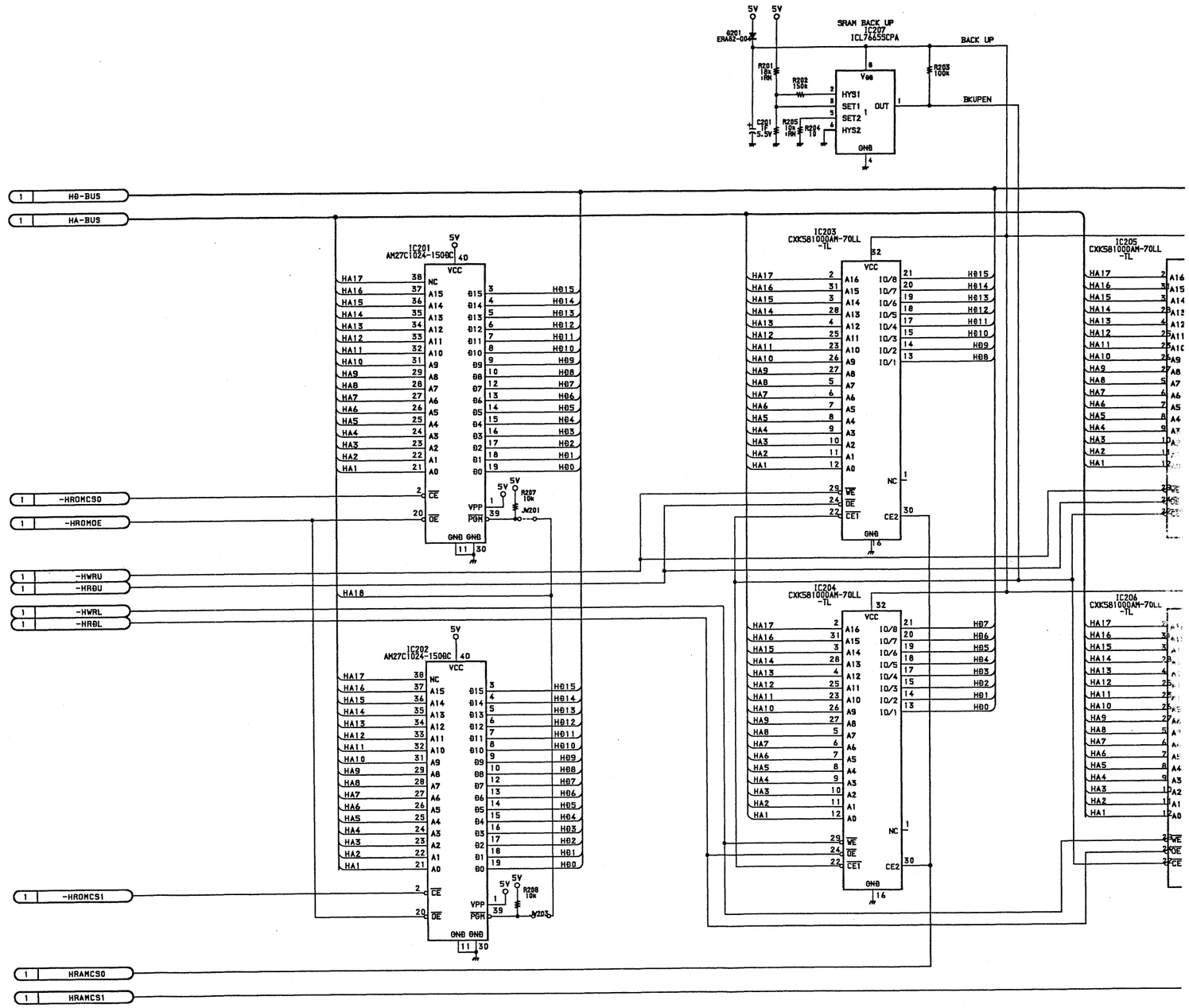

4-40

CPU-164 (2/6)
DMX-B4008 PROCESSOR

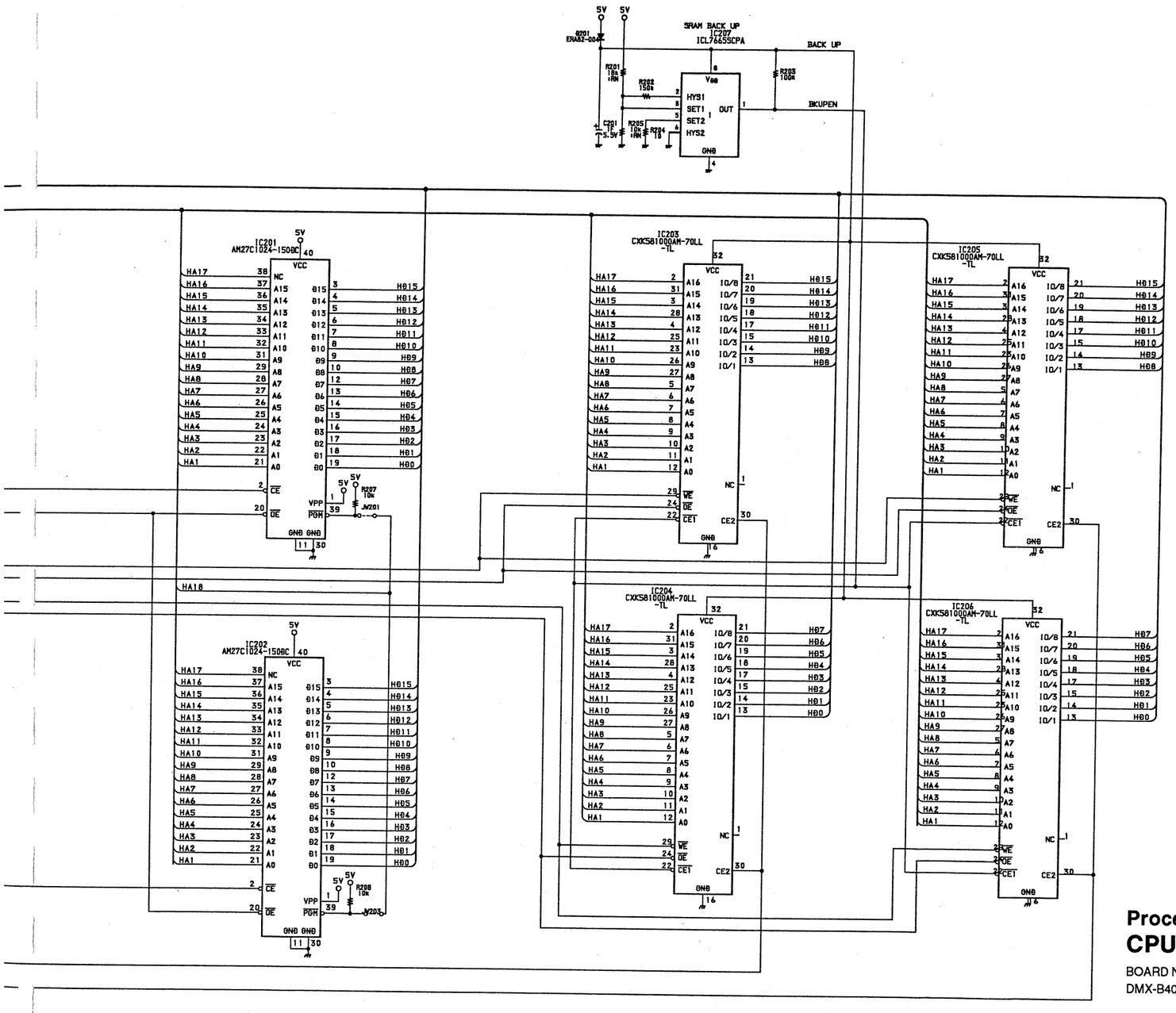

Processor Rack CPU
CPU-164 BOARD (2/6)

BOARD NO. 1-649-769-11
DMX-B4008

E F G H I J K L

CPU-164 (3/6)
DMX-B4008 PROCESSOR

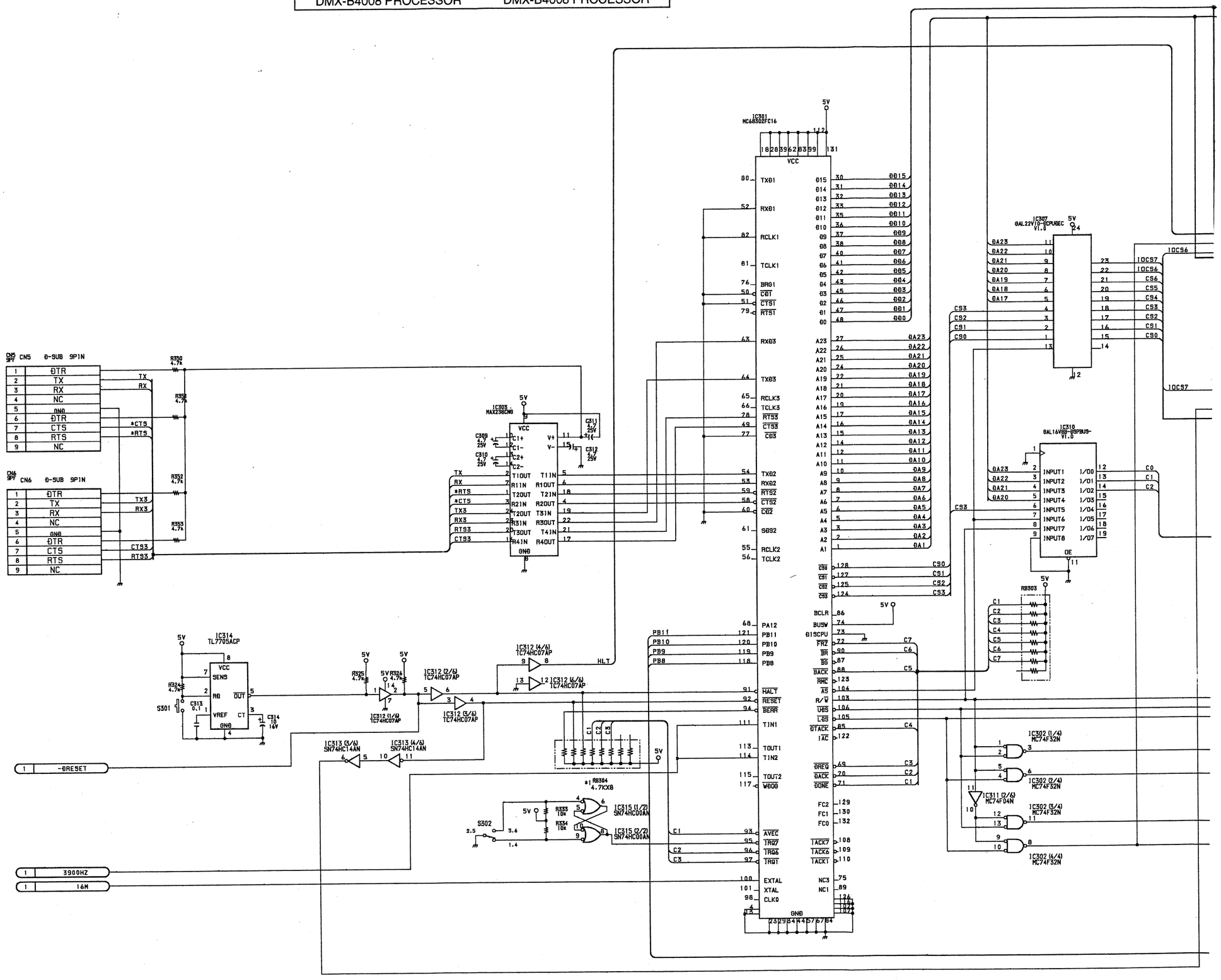

A B C D E F G H

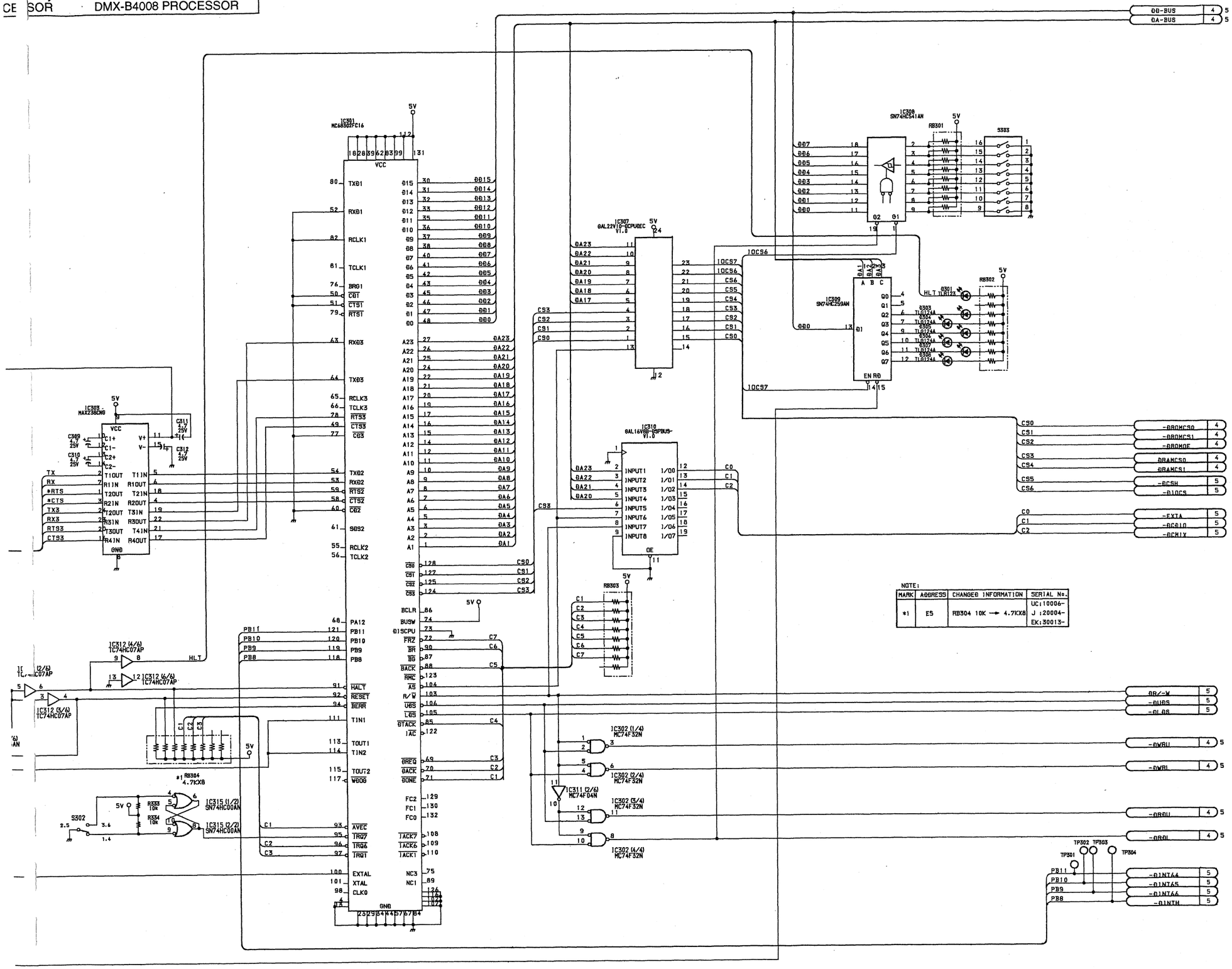

NOTE:

MARK	ADDRESS	CHANGED INFORMATION	SERIAL No.
*1	E5	RB304 10K → 4.7KX8	UC:10006- J :20004- EK:30013-

Processor Rack CPU

CPU-164 BOARD (3/6)

BOARD NO. 1-649-769-11
DMX-B4008

CPU-164 (4/6)
DMX-B4008 PROCESSOR

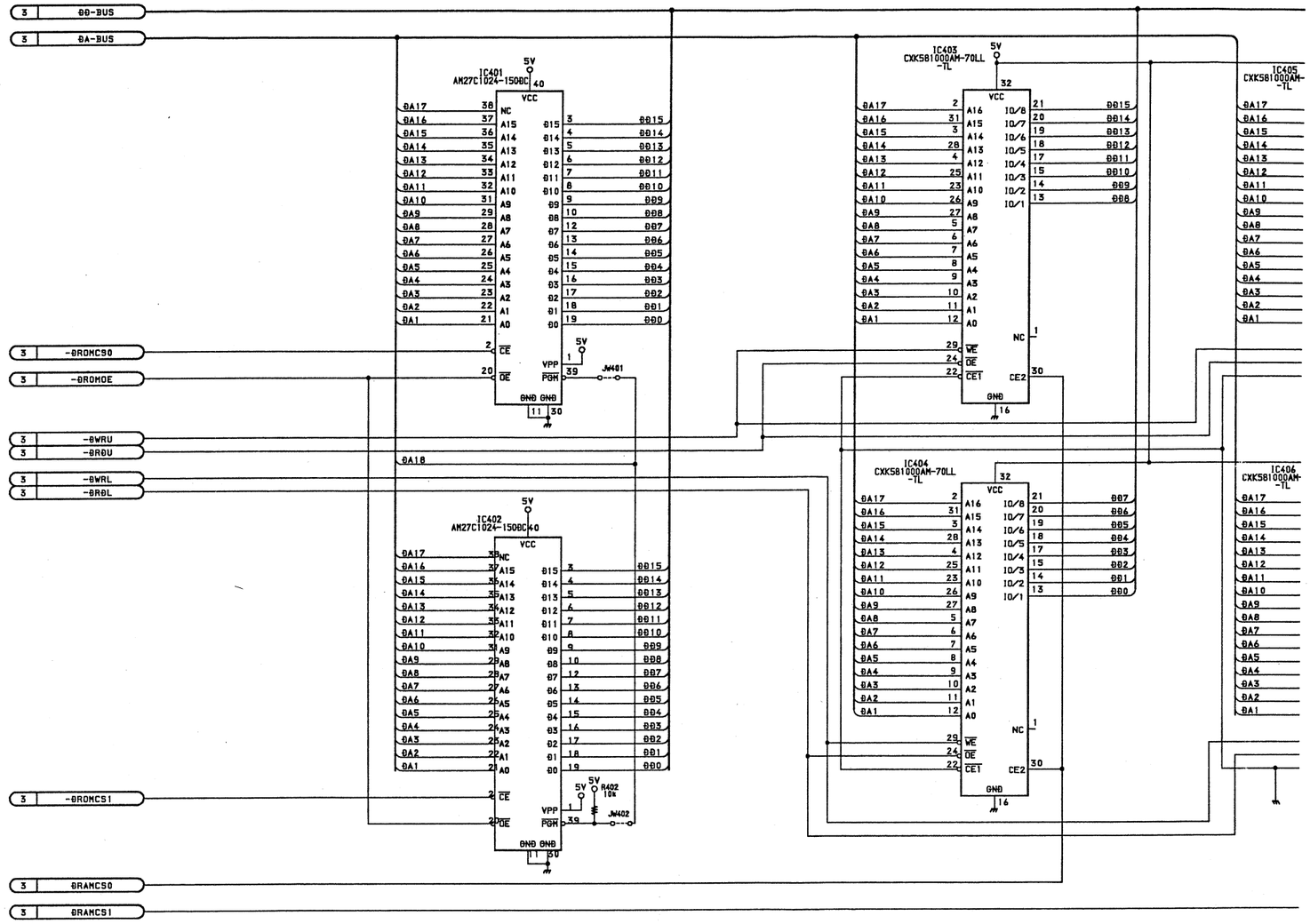

CPU-164 (4/6)
DMX-B4008 PROCESSOR

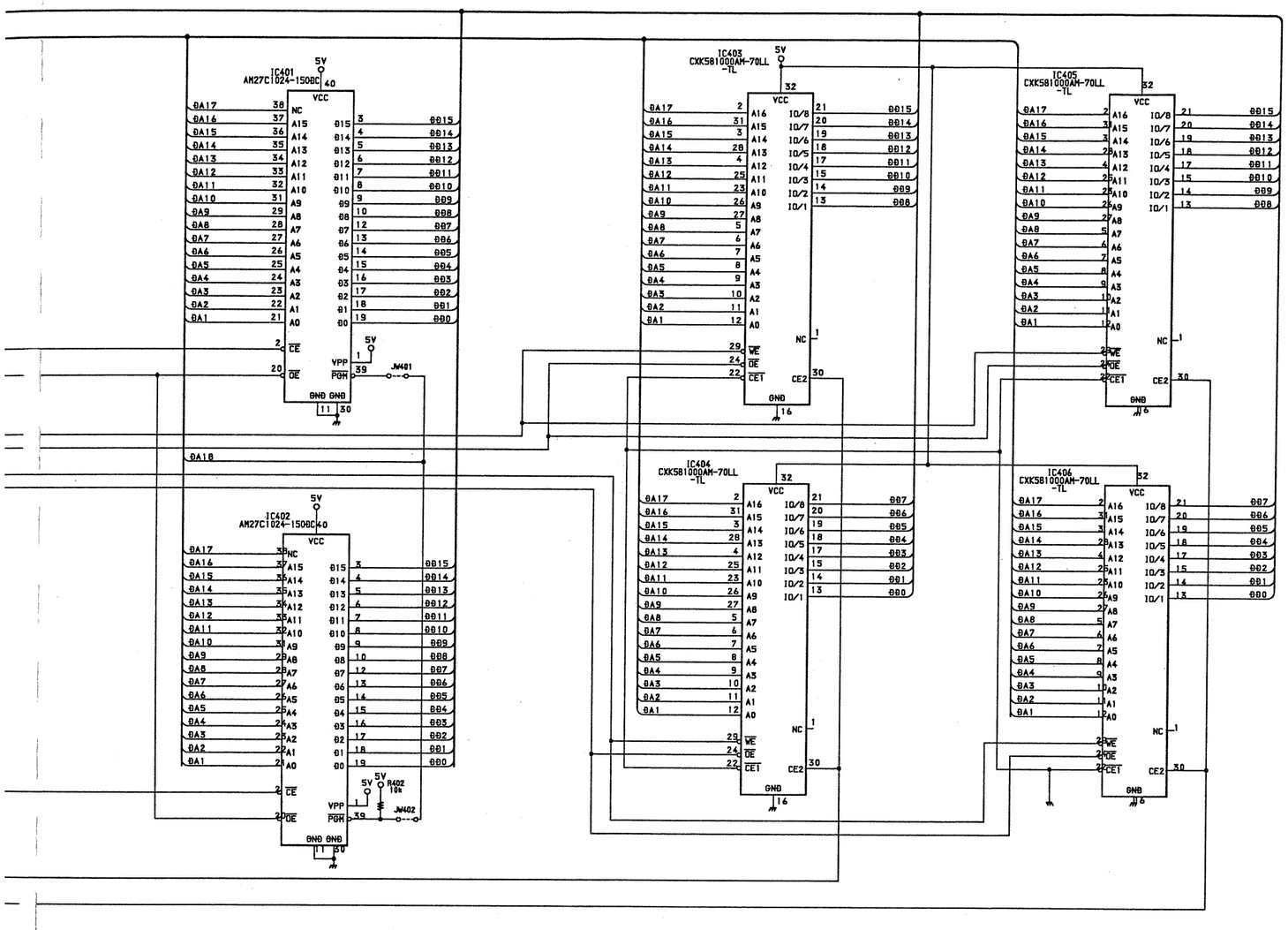

Processor Rack CPU
CPU-164 BOARD (4/6)

BOARD NO. 1-649-769-11
DMX-B4008

E F G H I J K L

CPU-164 (5/6)
DMX-B4008 PROCESSOR

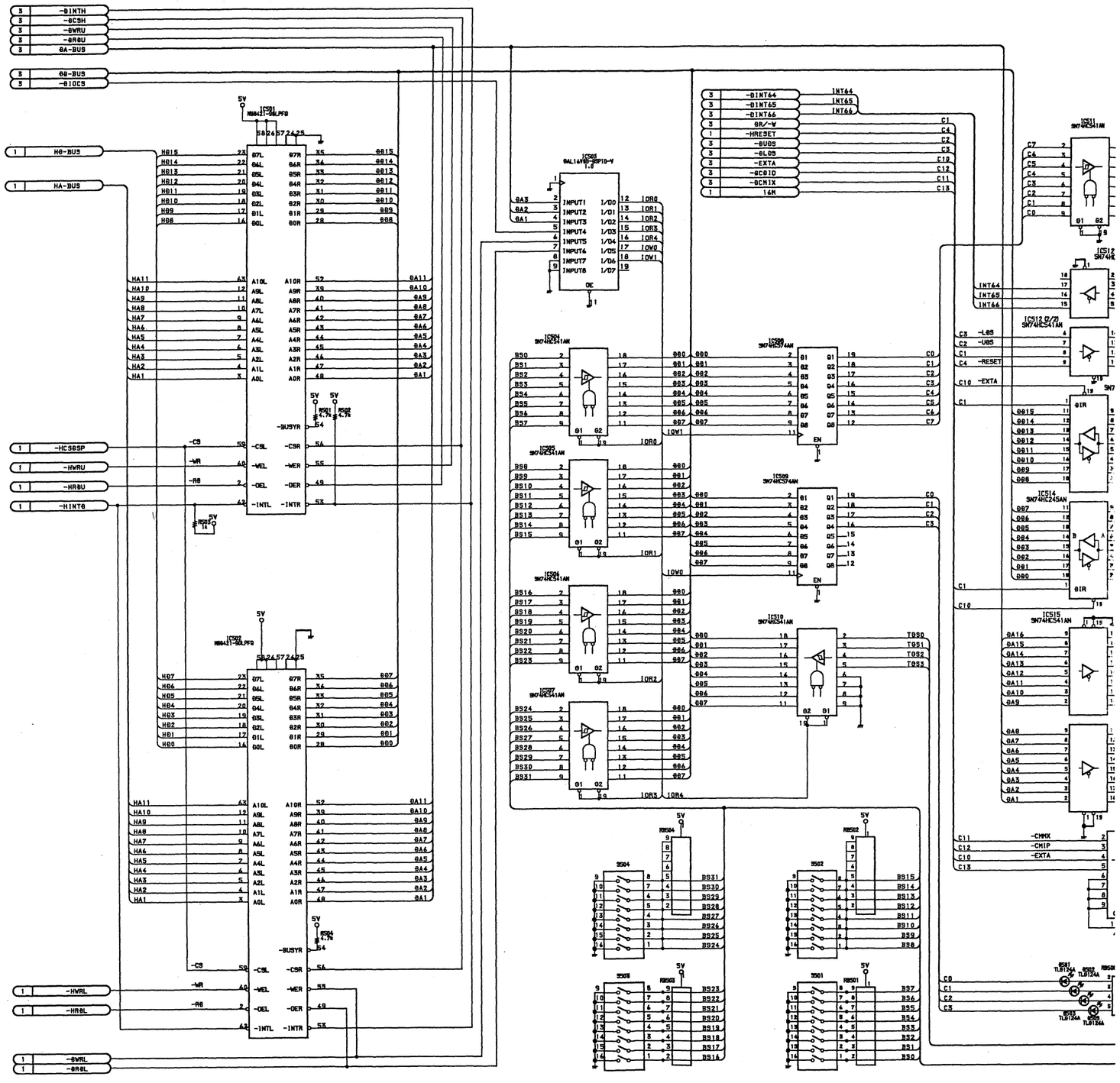

A B C D E F G H

CPU-164 (5/6)
DMX-B4008 PROCESSOR

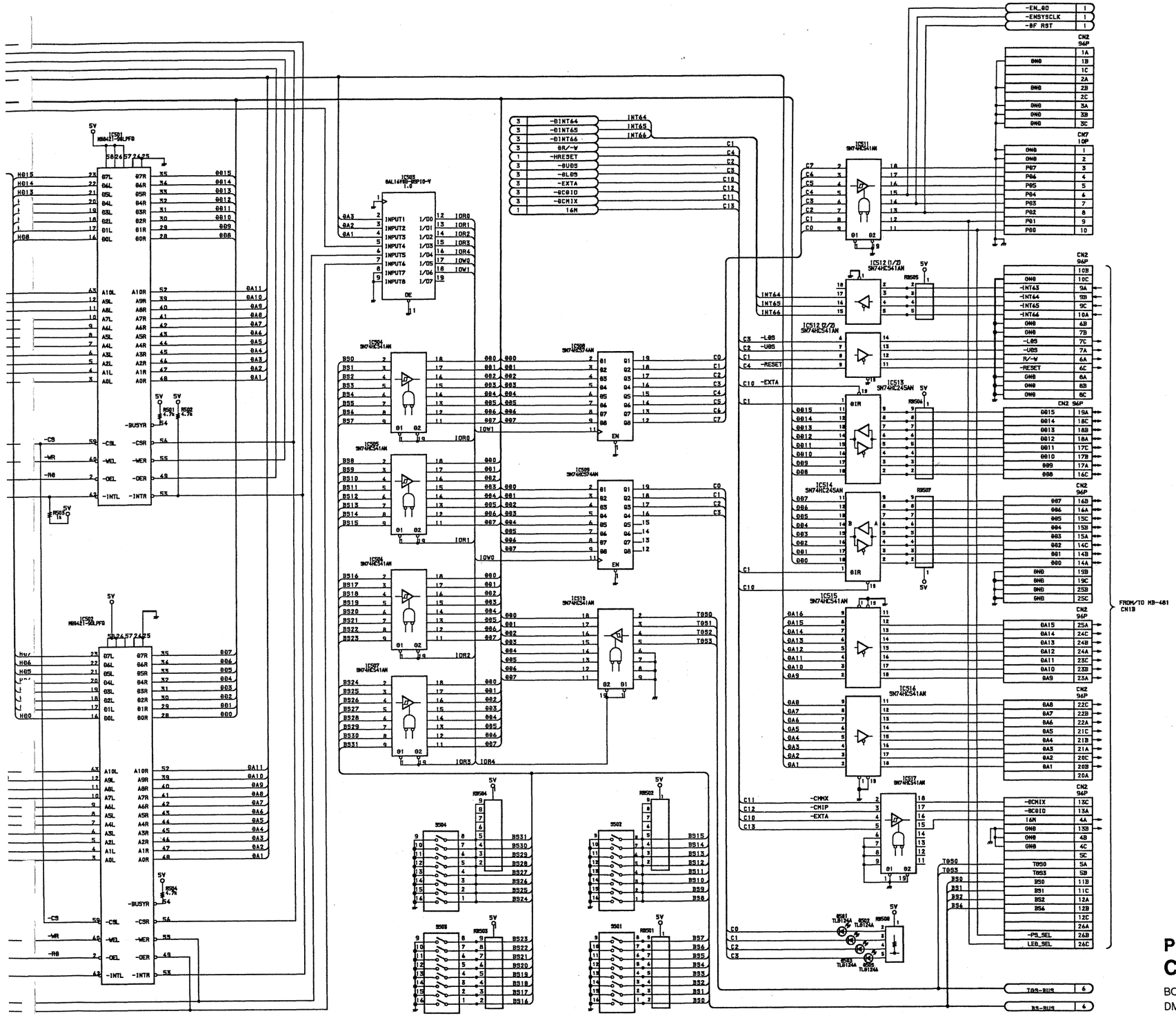

Processor Rack CPU
CPU-164 BOARD (5/6)

BOARD NO. 1-649-769-11
DMX-B4008

CPU-164 (6/6)
DMX-B4008 PROCESSOR

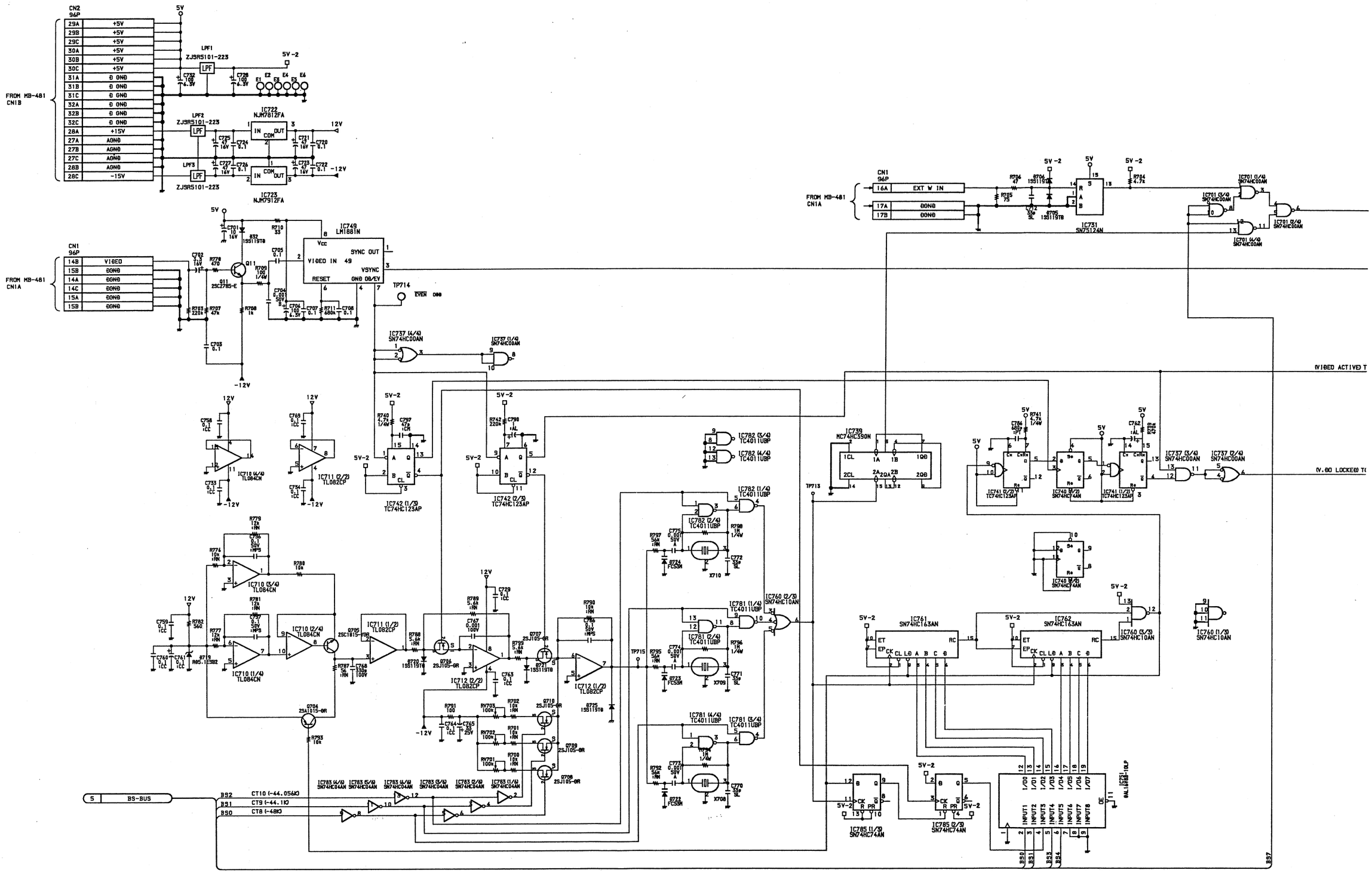

4-44

CPU-164 (6/6)
DMX-B4008 PROCESSOR

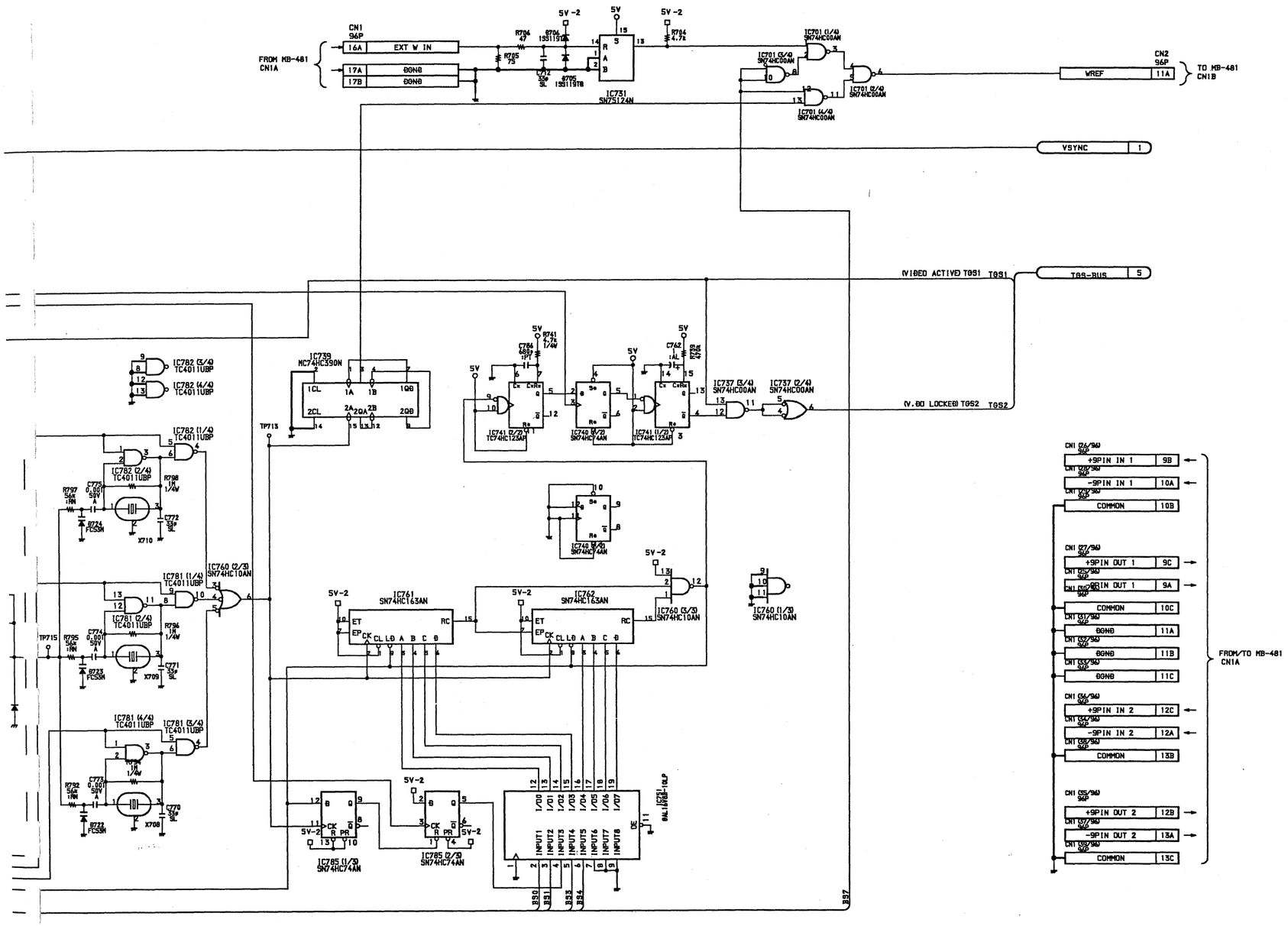

Processor Rack CPU
CPU-164 BOARD (6/6)

BOARD NO. 1-649-769-11
DMX-B4008

E F G H I J K L

DIO-26 (1/8)
DMX-B4008 PROCESSOR

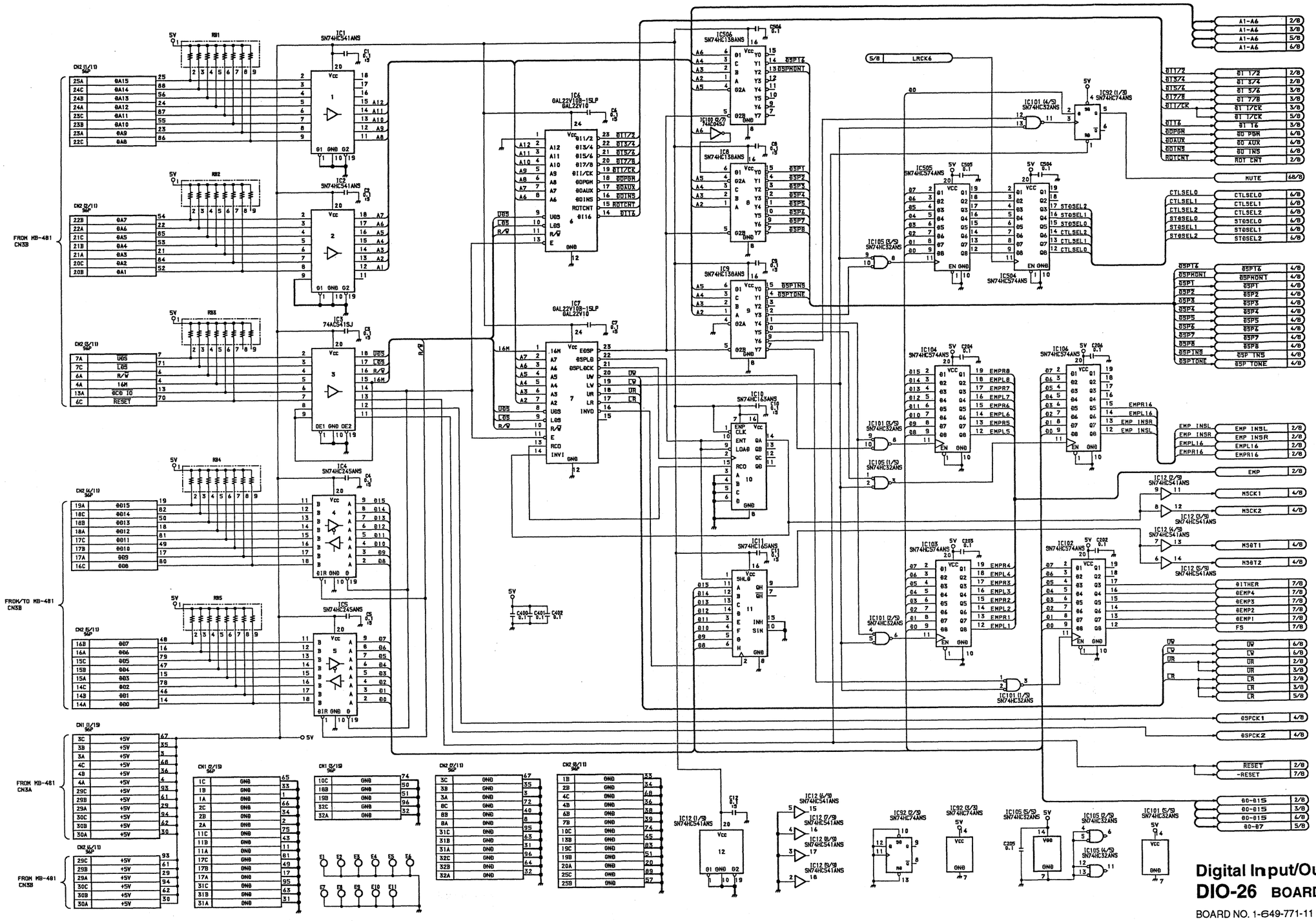

4-45

DIO-26 (2/8)
DMX-B4008 PROCESSOR

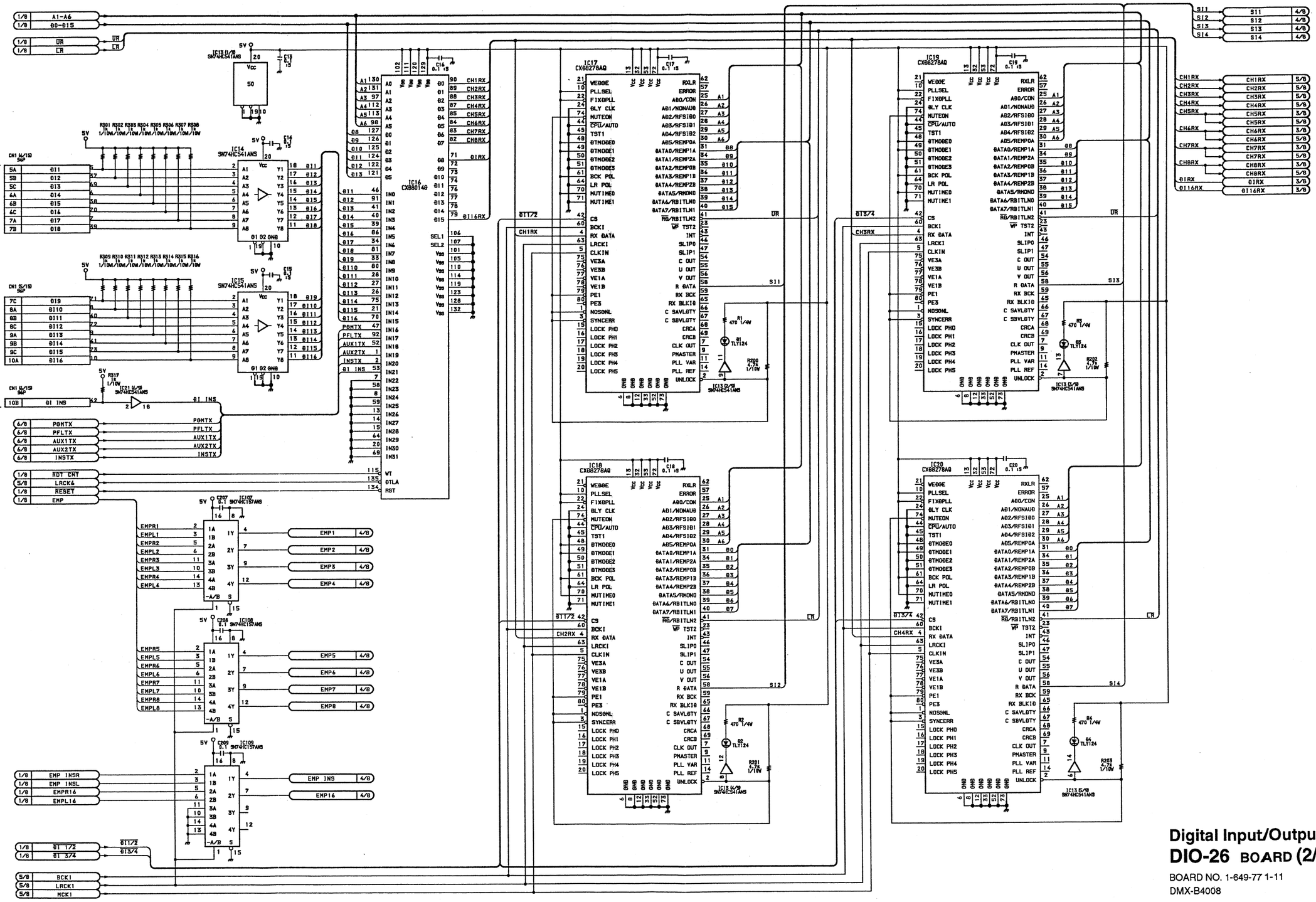

Digital Input/Output
DIO-26 BOARD (2/8)

BOARD NO. 1-649-77 1-11
DMX-B4008

4-46

DIO-26 (3/8)
DMX-B4008 PROCESSOR

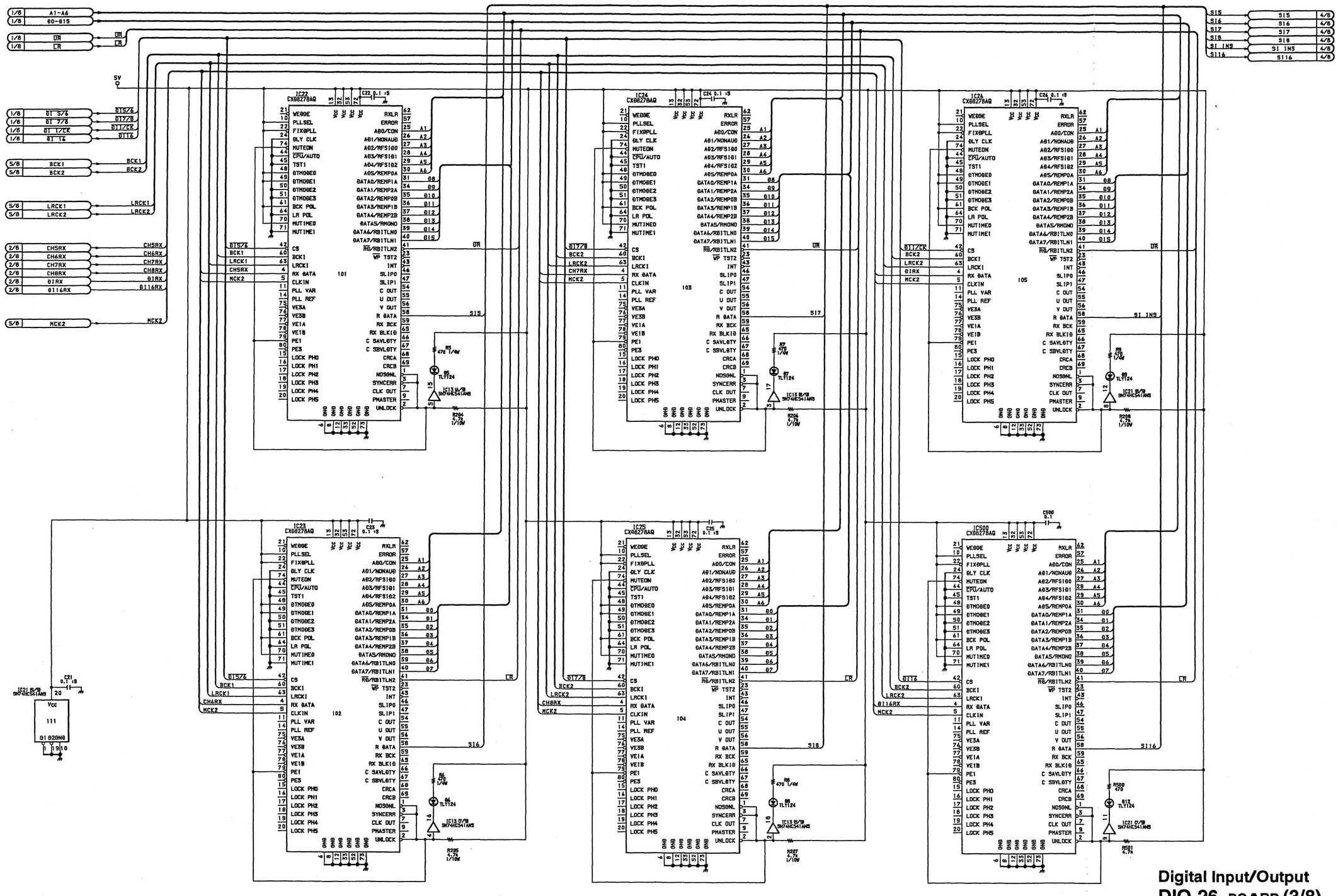

Digital Input/Output
DIO-26 BOARD (3/8)

BOARD NO. 1-649-771-11
DMX-B4008

DIO-26 (4/8)
DMX-B4008 PROCESSOR

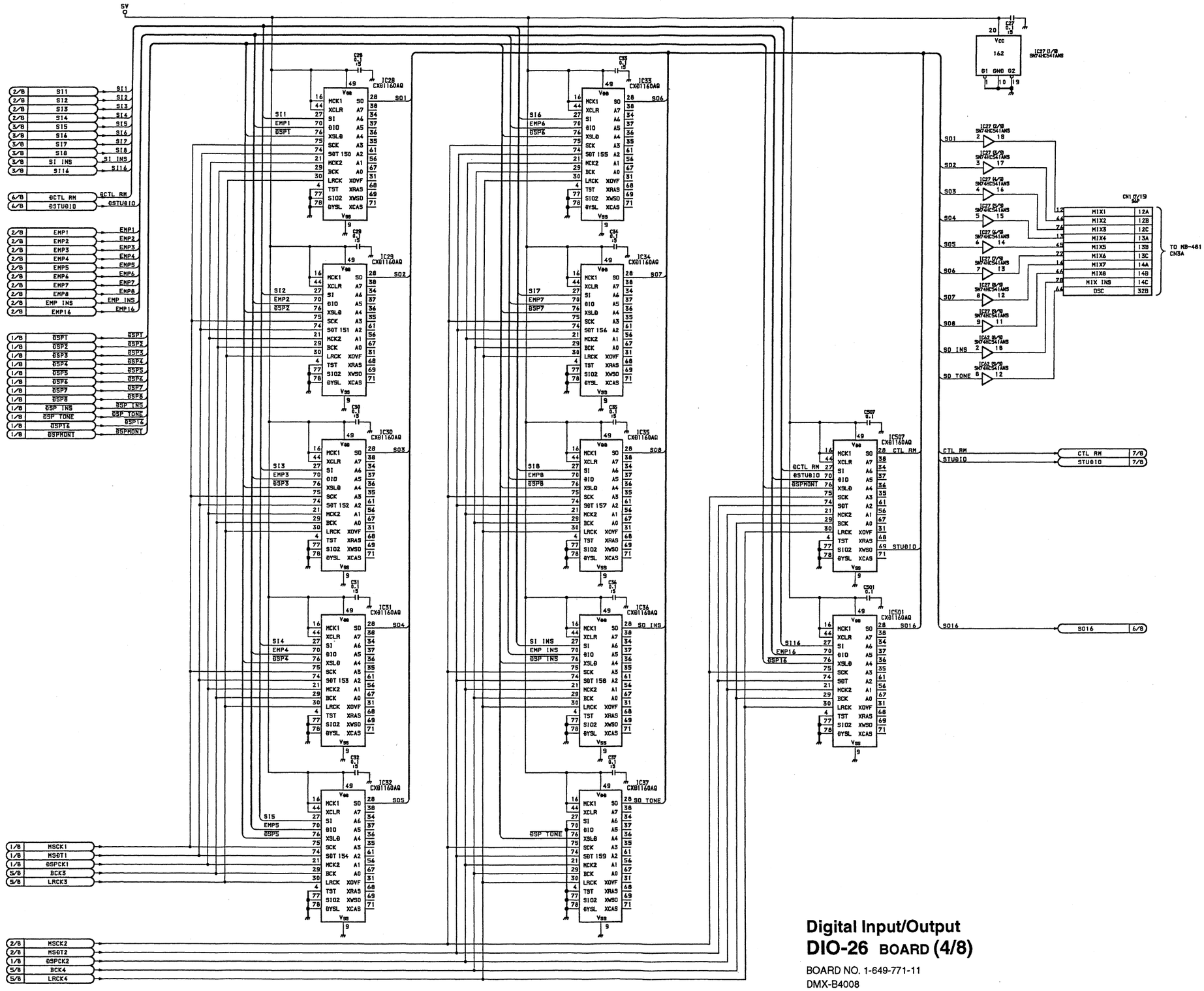

Digital Input/Output
DIO-26 BOARD (4/8)

BOARD NO. 1-649-771-11
DMX-B4008

4-48

DIO-26 (5/8)
DMX-B4008 PROCESSOR

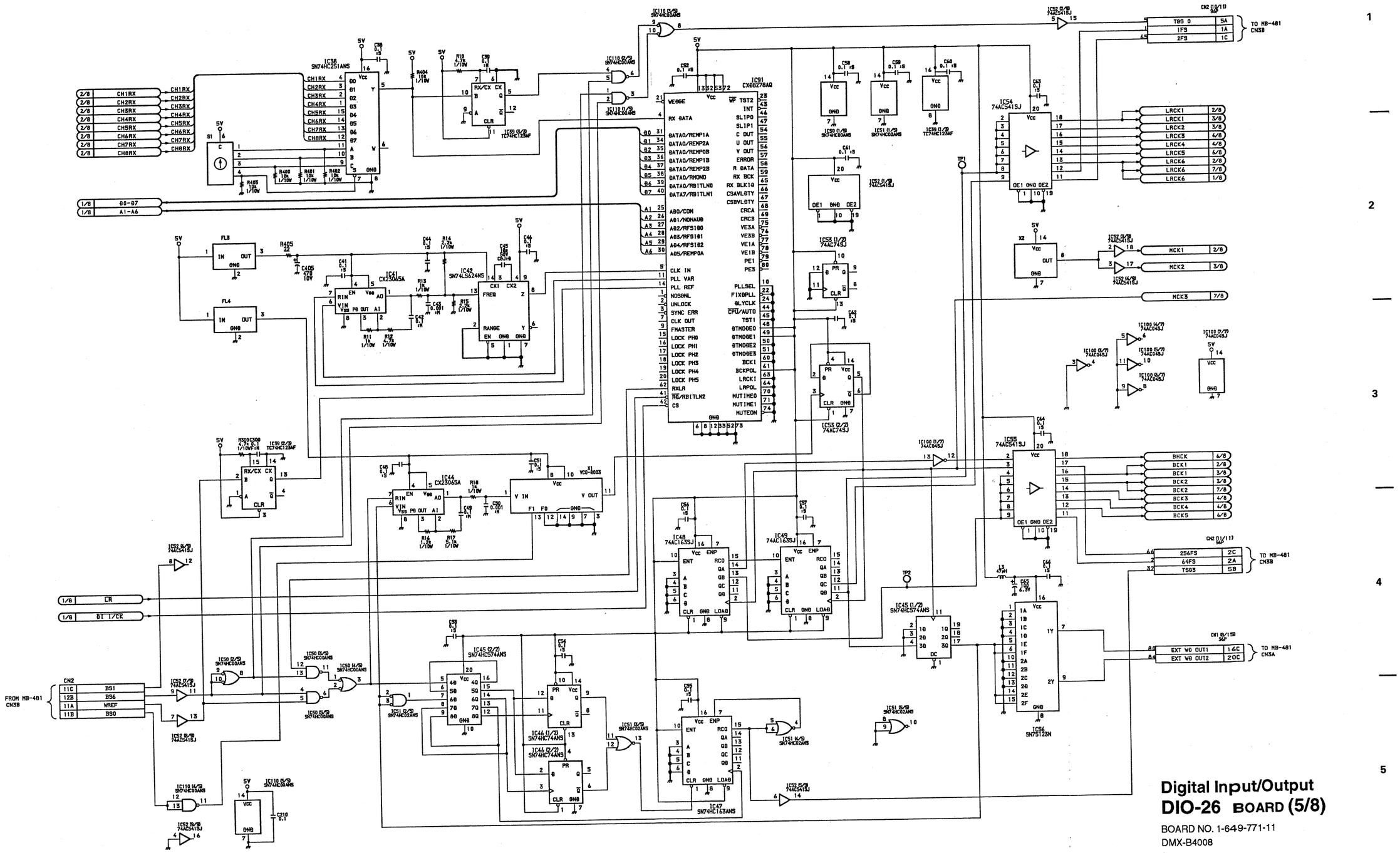

Digital Input/Output
DIO-26 BOARD (5/8)

BOARD NO. 1-649-771-11
DMX-B4008

4-49

DIO-26 (6/8)
DMX-B4008 PROCESSOR

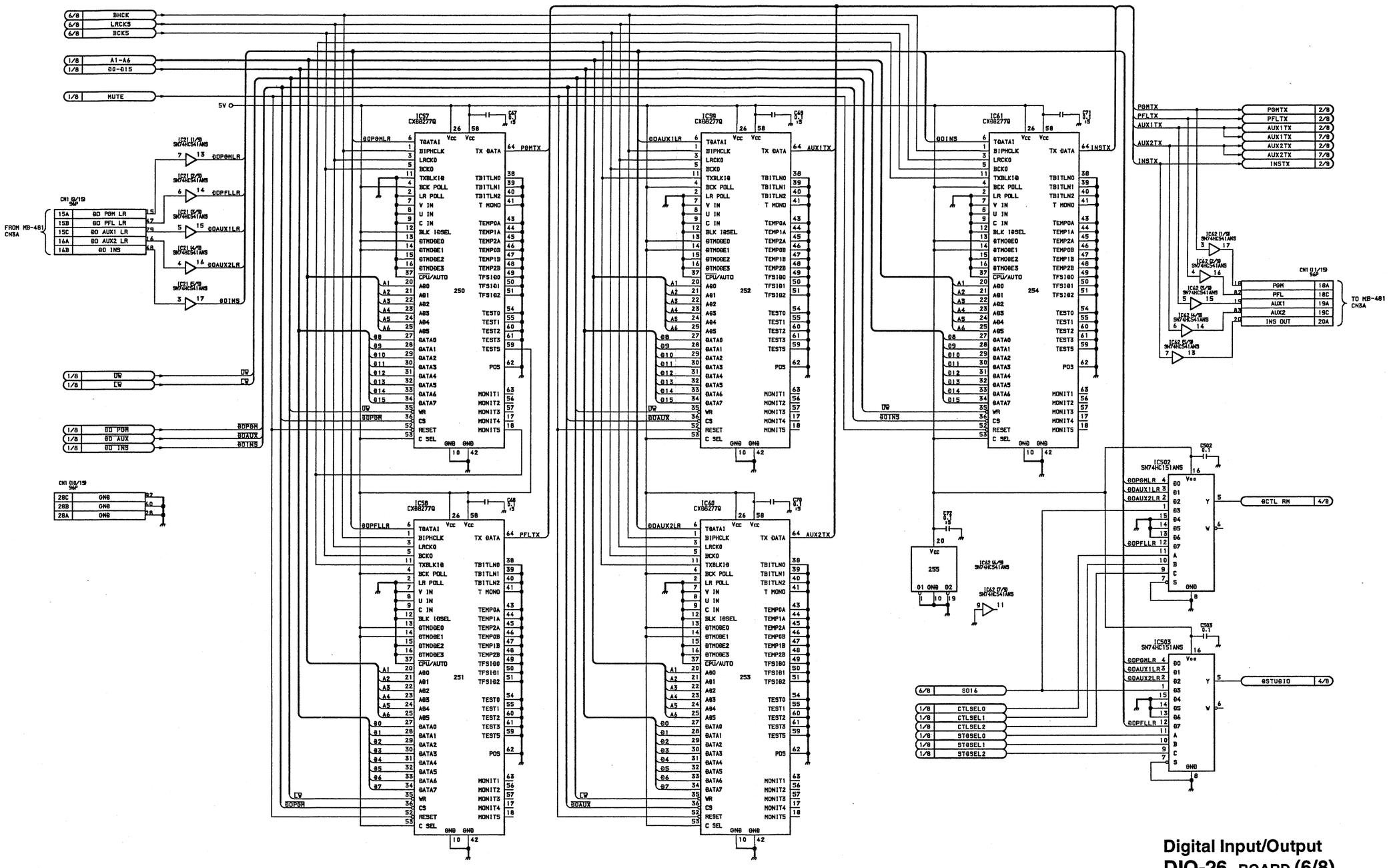

Digital Input/Output
DIO-26 BOARD (6/8)

BOARD NO. 1-649-771-11
DMX-B4008

4-50

DIO-26 (7/8)
DMX-B4008 PROCESSOR

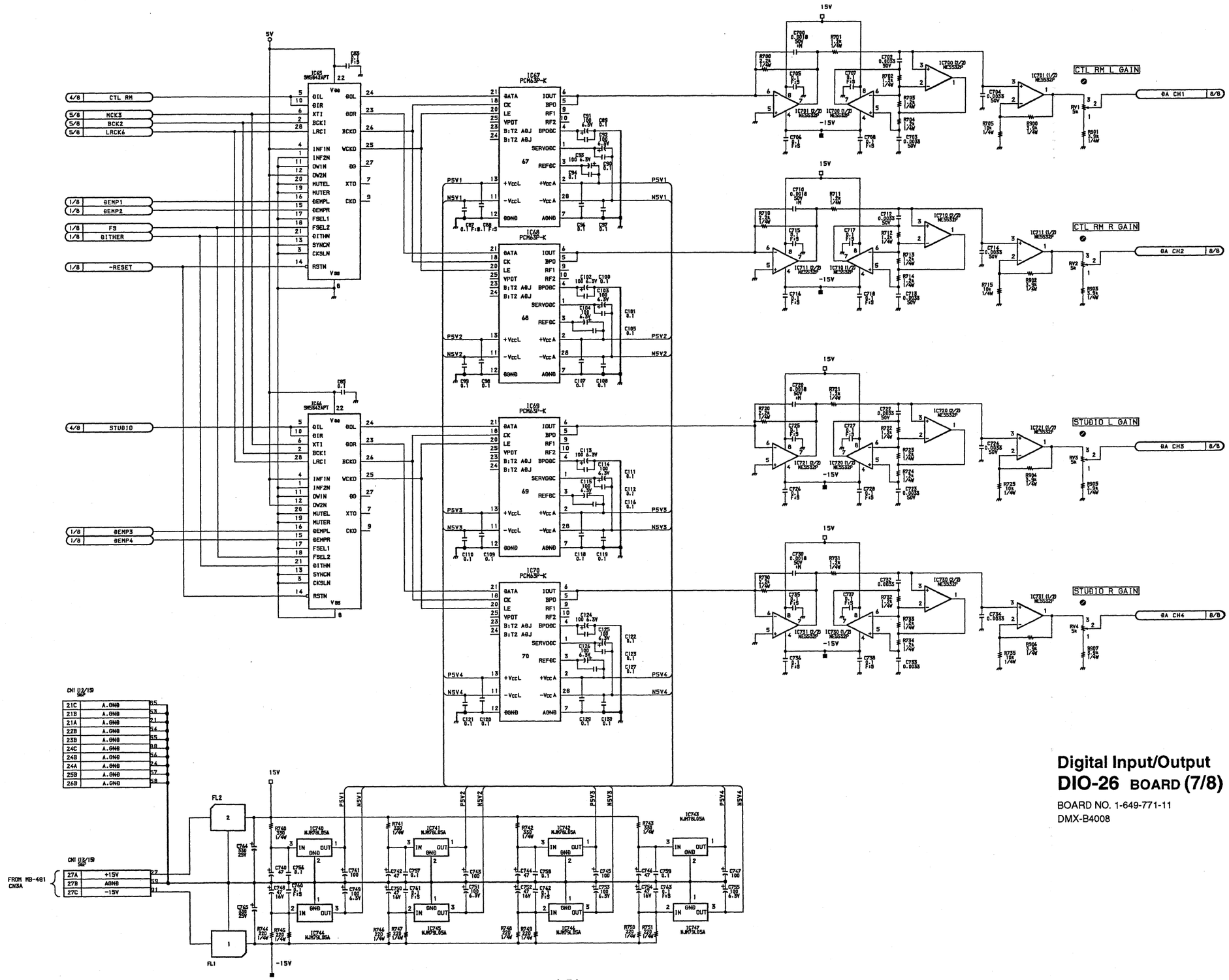

Digital Input/Output
DIO-26 BOARD (7/8)

BOARD NO. 1-649-771-11
DMX-B4008

4-51

DIO-26 (8/8)
DMX-B4008 PROCESSOR

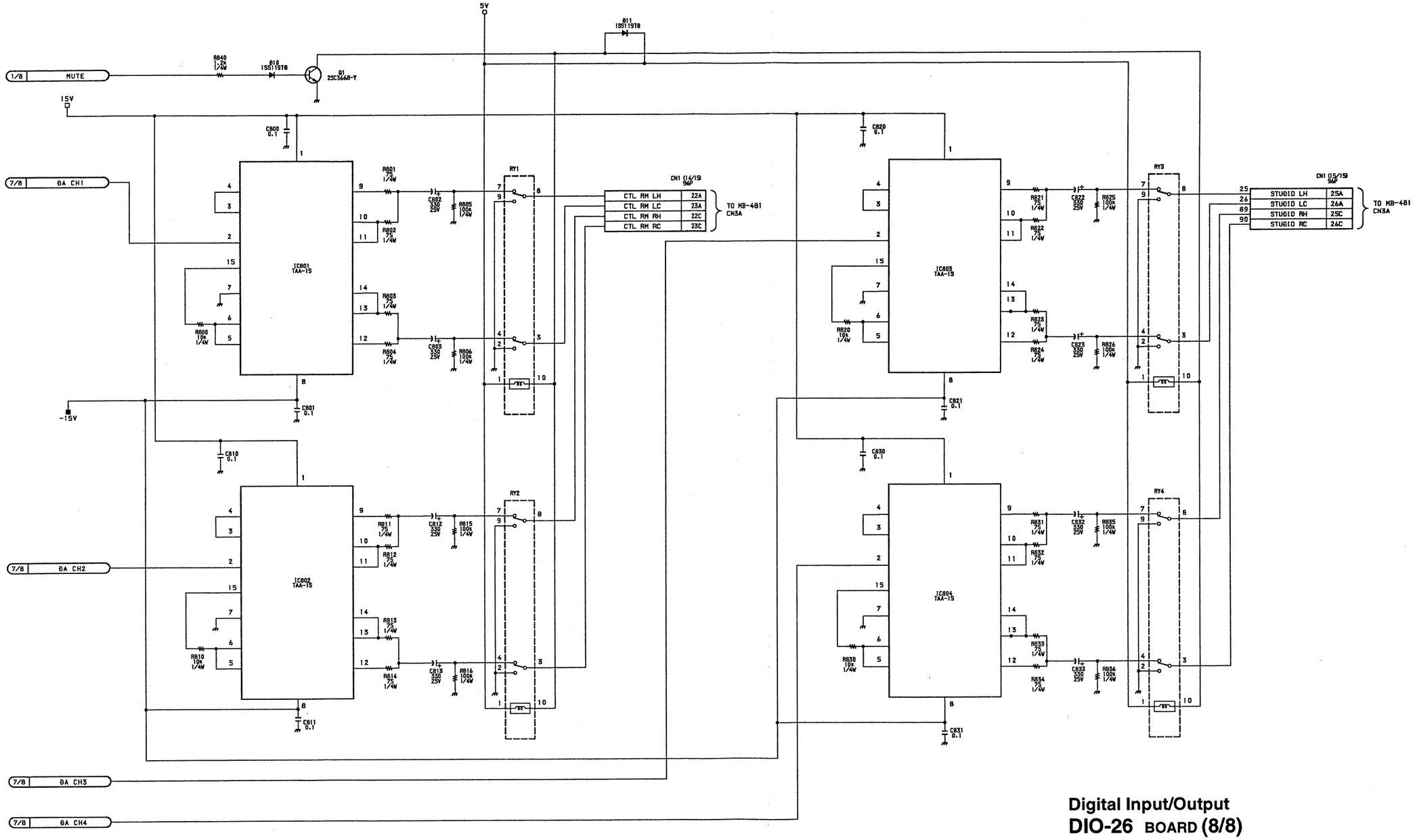

Digital Input/Output
DIO-26 BOARD (8/8)

BOARD NO. 1-649-771-11
DMX-B4008

4-52

MIX-15 (1/7)
DMX-B4008 PROCESSOR

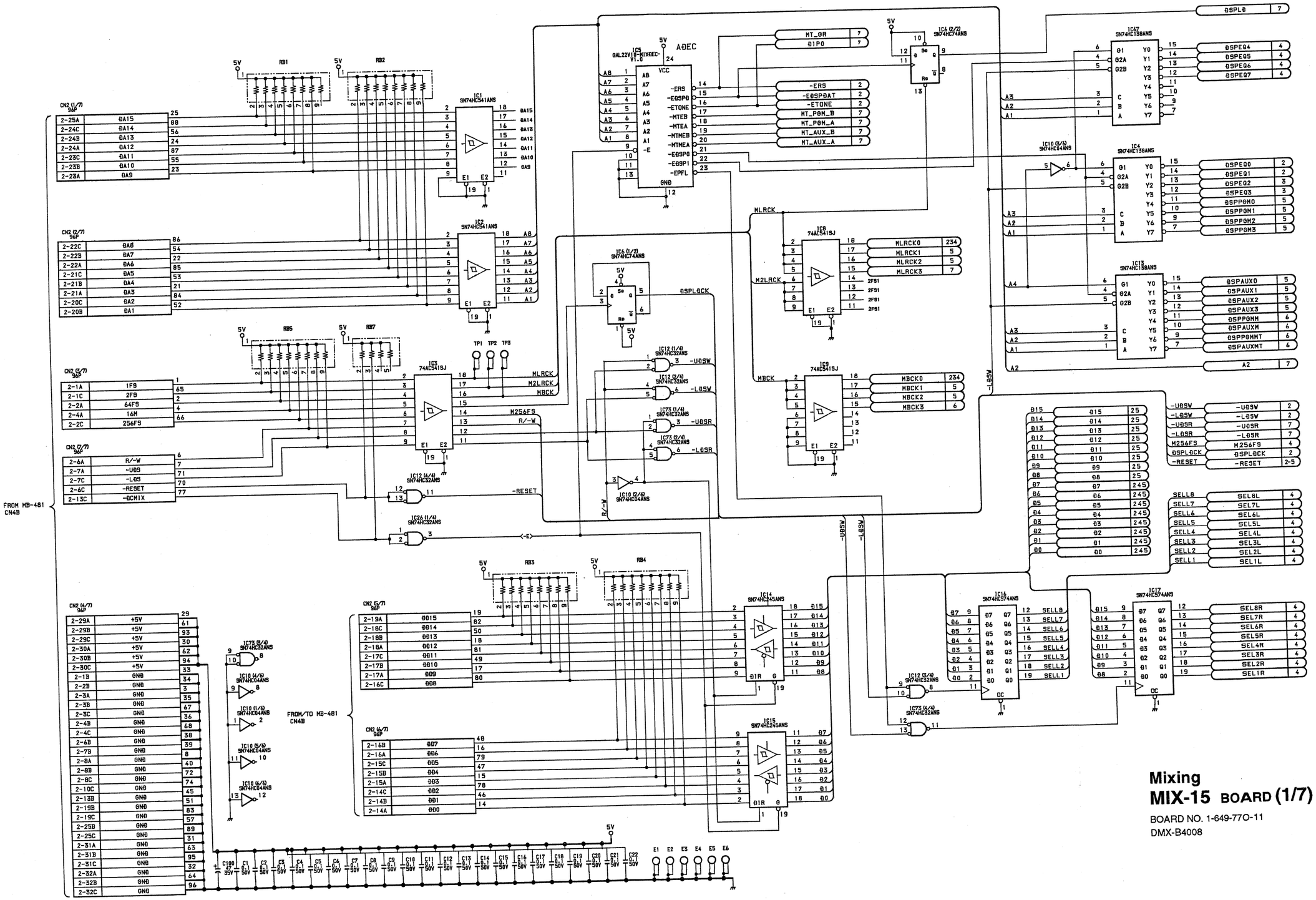

Mixing
MIX-15 BOARD (1/7)

BOARD NO. 1-649-770-11
DMX-B4008

4-53

MIX-15 (2/7)
DMX-B4008 PROCESSOR

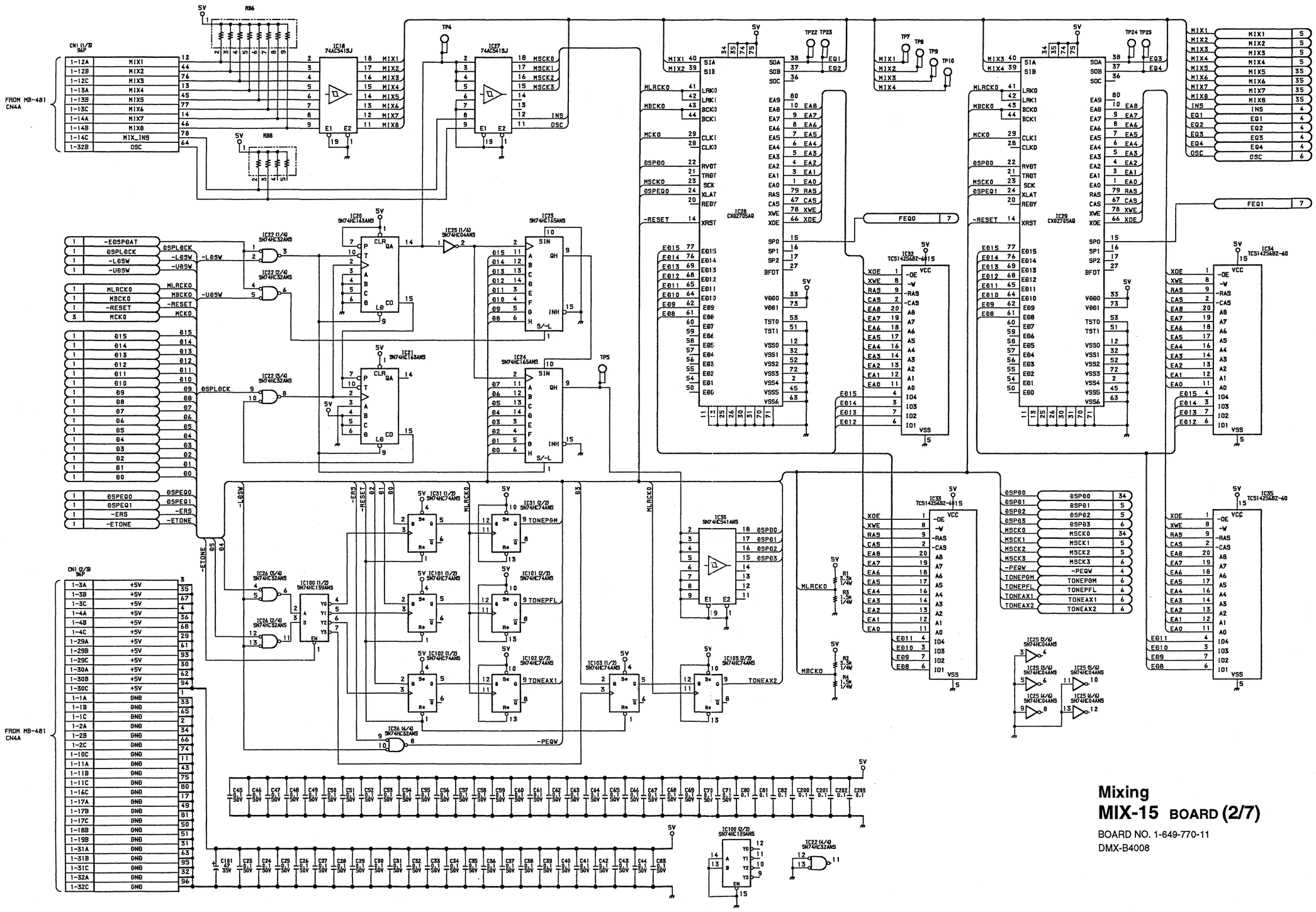

Mixing
MIX-15 BOARD (2/7)

BOARD NO. 1-649-770-11
DMX-B4008

4-54

MIX-15 (3/7)
DMX-B4008 PROCESSOR

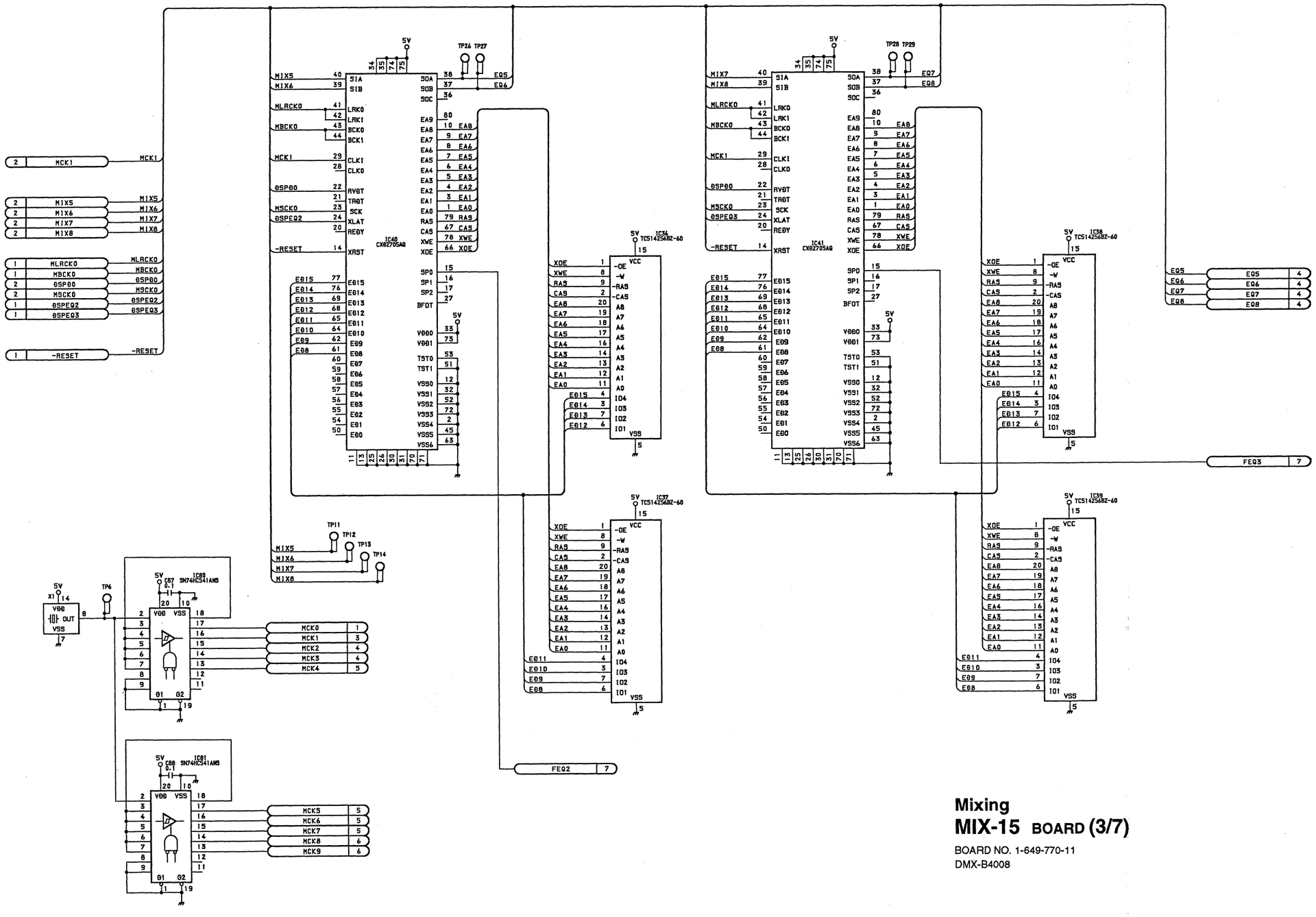

Mixing
MIX-15 BOARD (3/7)

BOARD NO. 1-649-770-11
DMX-B4008

4-55

MIX-15 (4/7)
DMX-B4008 PROCESSOR

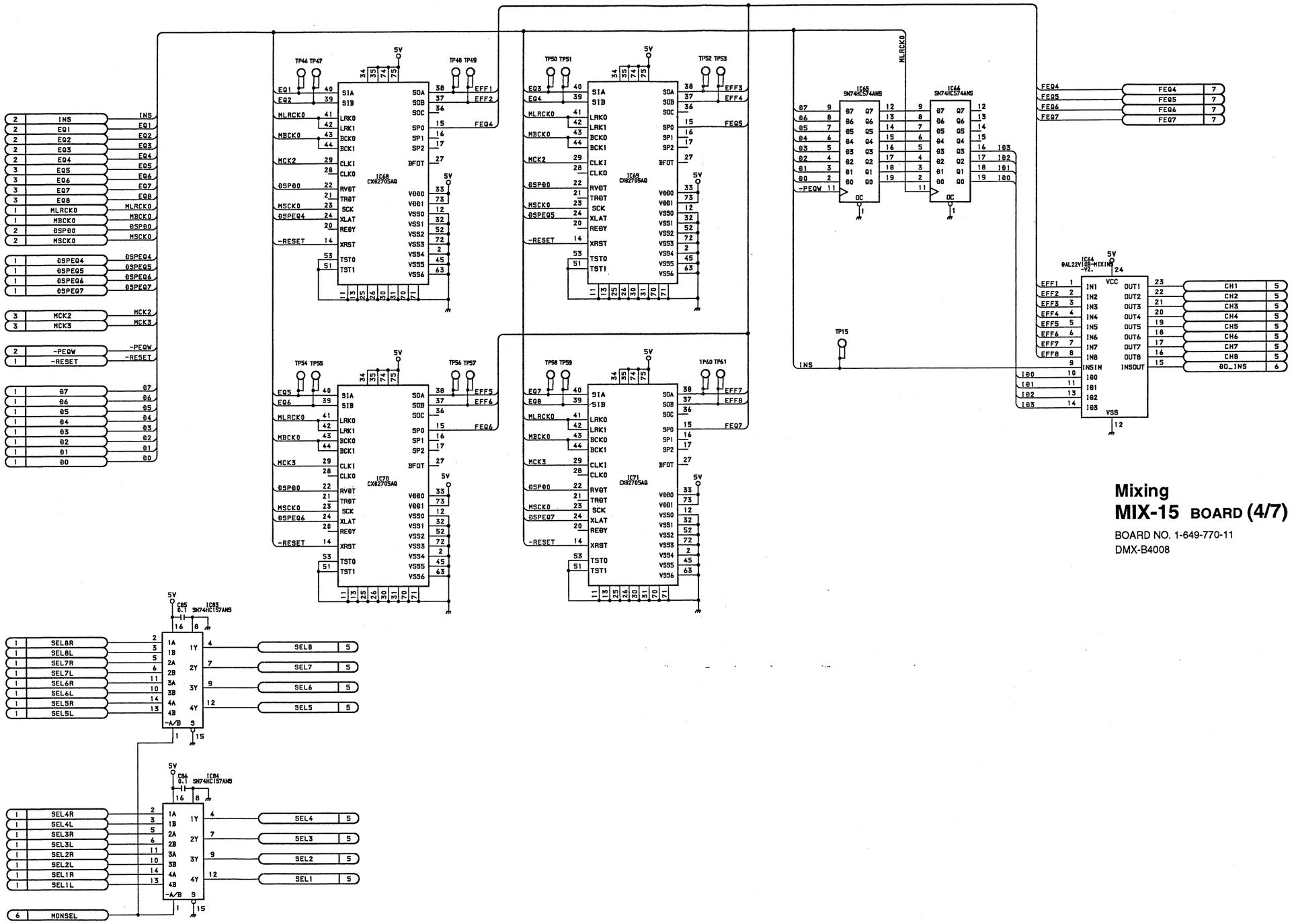

Mixing
MIX-15 BOARD (4/7)

BOARD NO. 1-649-770-11
DMX-B4008

4-56

MIX-15 (5/7)
DMX-B4008 PROCESSOR

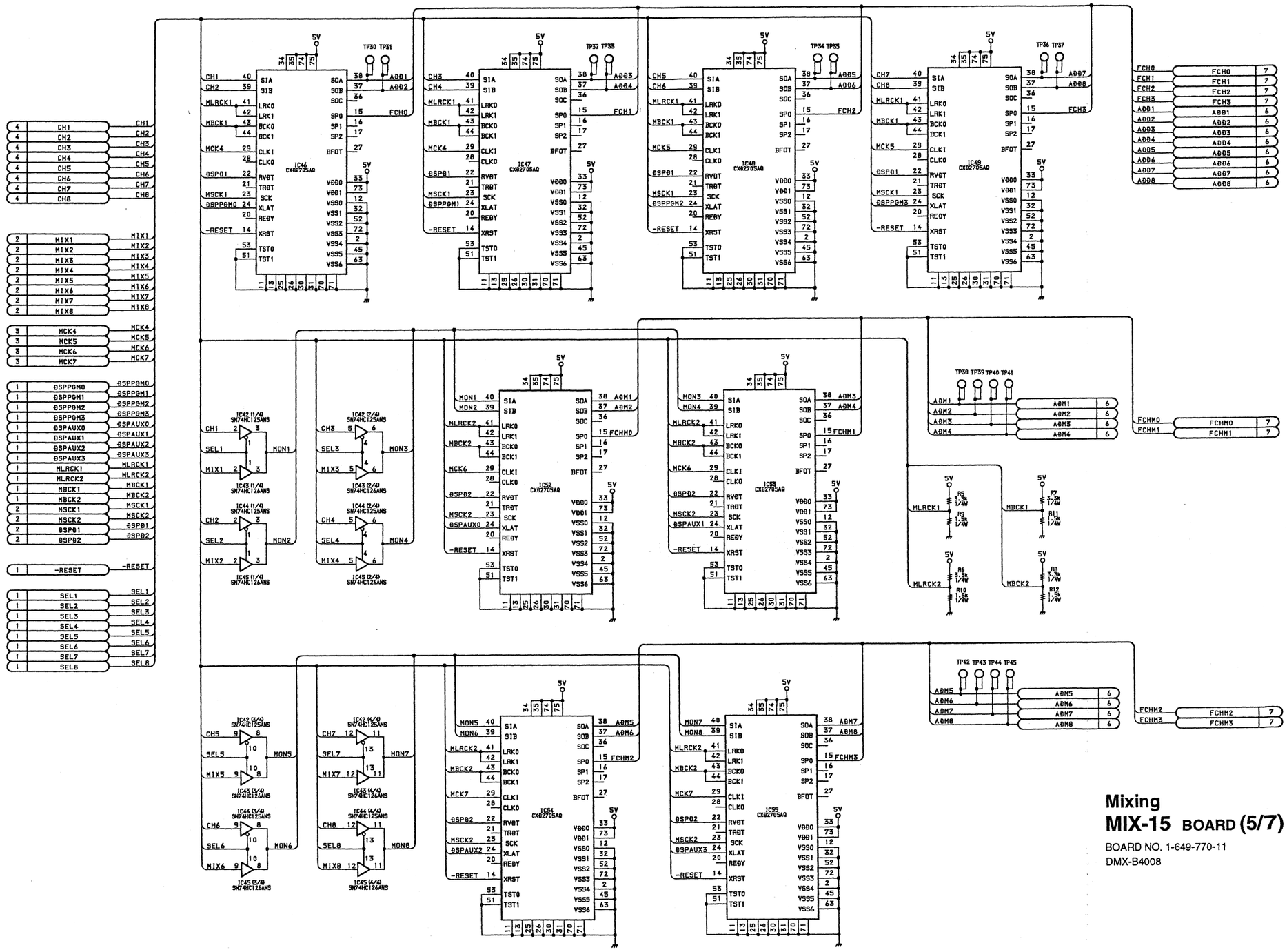

Mixing
MIX-15 BOARD (5/7)

BOARD NO. 1-649-770-11
DMX-B4008

4-57

MIX-15 (6/7)
DMX-B4008 PROCESSOR

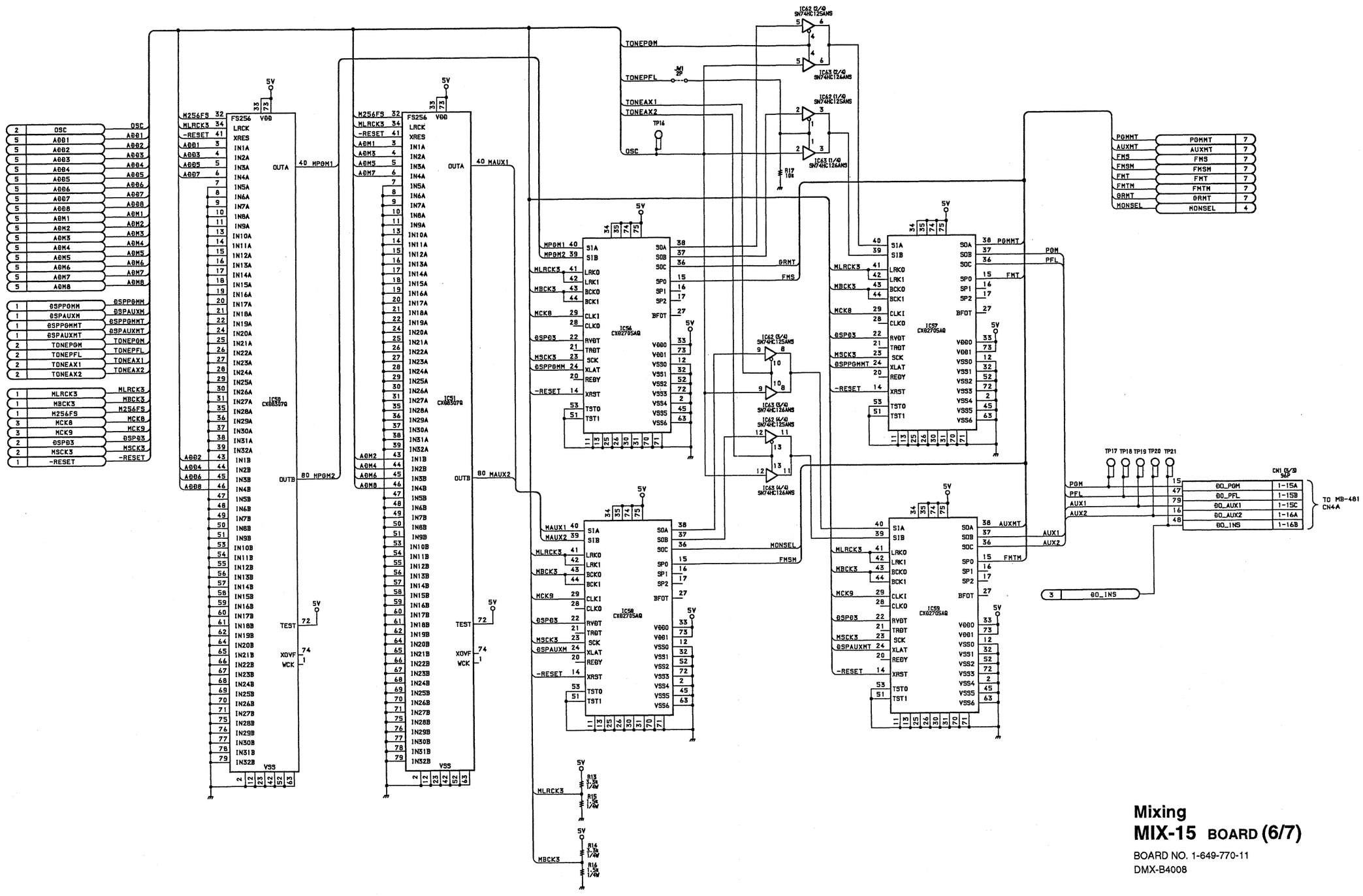

4-58

MIX-15 (7/7)
DMX-B4008 PROCESSOR

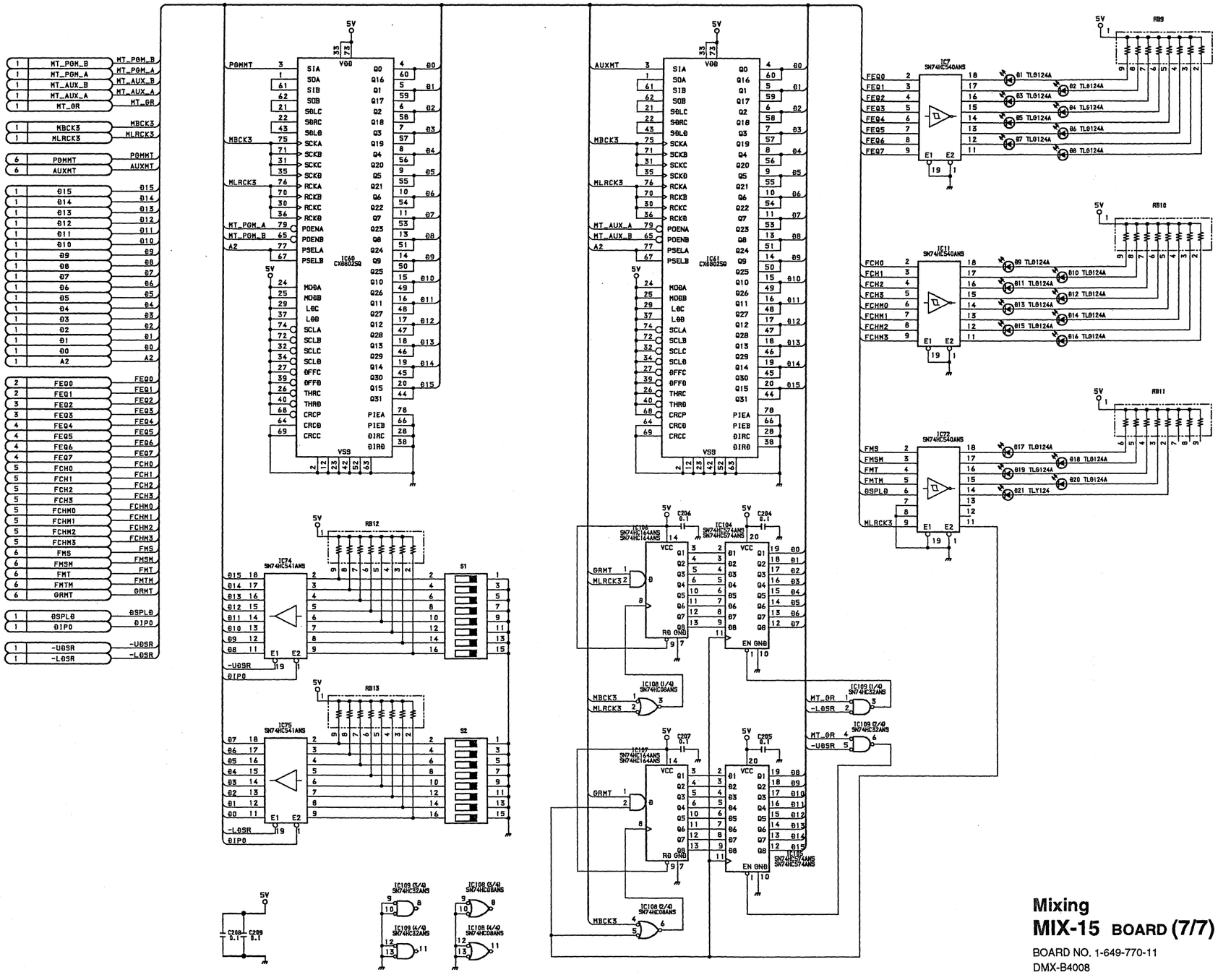

Mixing
MIX-15 BOARD (7/7)

BOARD NO. 1-649-770-11
DMX-B4008

4-59

MB-481 (1/3) DMX-B4008 PROCESSOR

CN835

CN7 96P

	A	B	C
1	GND	GND	GND
2	GND	GND	GND
3	+5V	+5V	+5V
4	+5V	+5V	+5V
5	D11	D12	D13
6	D14	D15	D16
7	D17	D18	D19
8	D110	D111	D112
9	D113	D114	D115
10	D116	D1_INS	GND
11	PGM	PFL	AUX1
12	AUX2	INS_OUT	GND
13	KYRCK	-KYRCK	GND
14	KYTX	-KYTX	GND
15	KYRX	-KYRX	GND
16	KYTCK	-KYRCK	GND
17	-SPOUT1	+SPIN1	+SPOUT1
18	-SPIN1	-SPIN2	+SPOUT2
19	+SPIN2	-SPOUT2	GND
20	TX	RX	RTS
21	CTS	DSR	DTR
22	GND	GND	GND
23	GND	GND	GND
24	GND	GND	GND
25	GND	GND	GND
26	GND	GND	GND
27	GND	GND	GND
28	GND	GND	GND
29	GND	GND	GND
30	GND	GND	GND
31	GND	GND	GND
32	GND	GND	GND

CN834

CN6 96P

	A	B	C
1	GND	GND	GND
2	GND	GND	GND
3	+5V	+5V	+5V
4	+5V	+5V	+5V
5	D11	D12	D13
6	D14	D15	D16
7	D17	D18	D19
8	D110	D111	D112
9	D113	D114	D115
10	D116	D1_INS	GND
11	PGM	PFL	AUX1
12	AUX2	INS_OUT	GND
13	KYRCK	-KYRCK	GND
14	KYTX	-KYTX	GND
15	KYRX	-KYRX	GND
16	KYTCK	-KYTCK	GND
17	-SPOUT1	+SPIN1	+SPOUT1
18	-SPIN1	-SPIN2	+SPOUT2
19	+SPIN2	-SPOUT2	GND
20	TX	RX	RTS
21	CTS	DSR	DTR
22	CPU RESET	VSYNC	GND
23	GND	GND	GND
24	GND	GND	GND
25	GND	-EN_DD	GND
26	GND	GND	GND
27	GND	GND	GND
28	GND	GND	GND
29	GND	GND	GND
30	GND	GND	GND
31	GND	GND	GND
32	GND	GND	GND

CN833

CN5 96P

	A	B	C
1	GND	GND	GND
2	GND	GND	GND
3	+5V	+5V	+5V
4	+5V	+5V	+5V
5	D11	D12	D13
6	D14	D15	D16
7	D17	D18	D19
8	D110	D111	D112
9	D113	D114	D115
10	D116	D1_INS	GND
11	PGM	PFL	AUX1
12	AUX2	INS_OUT	GND
13	KYRCK	-KYRCK	GND
14	KYTX	-KYTX	GND
15	KYRX	-KYRX	GND
16	KYTCK	-KYRCK	GND
17	-SPOUT1	+SPIN1	+SPOUT1
18	-SPIN1	-SPIN2	+SPOUT2
19	+SPIN2	-SPOUT2	GND
20	TX	RX	RTS
21	CTS	DSR	DTR
22	GND	GND	GND
23	GND	VIDEO	GND
24	GND	GND	GND
25	EXTWDIN	-EN_DD	EXTWDOUT1
26	GND	EXTWDOUT2	GND
27	GND	GND	GND
28	GND	GND	GND
29	GND	GND	GND
30	GND	GND	GND
31	GND	GND	GND
32	GND	GND	GND

MIX-15

CN4A 96P

	A	B	C
1	GND	GND	GND
2	GND	GND	GND
3	+5V	+5V	+5V
4	+5V	+5V	+5V
5	D11	D12	D13
6	D14	D15	D16
7	D17	D18	D19
8	D110	D111	D112
9	D113	D114	D115
10	D116	D1_INS	GND
11	GND	GND	GND
12	MIX1	MIX2	MIX3
13	MIX4	MIX5	MIX6
14	MIX7	MIX8	MIX_INS
15	DD_PGM	DD_PFL	DD_AUX1
16	DD_AUX2	DD_INS	N.C.
17	GND	GND	GND
18	PGM	GND	PFL
19	AUX1	GND	AUX2
20	INS_OUT		
21			
22			
23			
24			
25			
26			
27			
28	GND	GND	GND
29	+5V	+5V	+5V
30	+5V	+5V	+5V
31	GND	GND	GND
32	GND	DSC	GND

DIO-26

CN3A 96P

	A	B	C
1	GND	GND	GND
2	GND	GND	GND
3	+5V	+5V	+5V
4	+5V	+5V	+5V
5	D11	D12	D13
6	D14	D15	D16
7	D17	D18	D19
8	D110	D111	D112
9	D113	D114	D115
10	D116	D1_INS	GND
11	GND	GND	GND
12	MIX1	MIX2	MIX3
13	MIX4	MIX5	MIX6
14	MIX7	MIX8	MIX_INS
15	DD_PGM	DD_PFL	DD_AUX1
16	DD_AUX2	DD_INS	EXTWDOUT1
17	GND	GND	GND
18	PGM	GND	PFL
19	AUX1	GND	AUX2
20	INS_OUT		EXTWDOUT2
21	AGND	AGND	AGND
22	CTL_L (+)	AGND	CTL_R (+)
23	CTL_L (C)	AGND	CTL_R (C)
24	AGND	AGND	AGND
25	STG_L (+)	AGND	STG_R (+)
26	STG_L (C)	AGND	STG_R (C)
27	+15V	AGND	-15V
28	GND	GND	GND
29	+5V	+5V	+5V
30	+5V	+5V	+5V
31	GND	GND	GND
32	GND	DSC	GND

IF

CN2A

	A	B	C
1	GND	GND	GND
2	GND	GND	GND
3	+5V	+5V	+5V
4	+5V	+5V	+5V
5	KYRCK	-KYRCK	GND
6	KYTX	-KYTX	GND
7	KYRX	-KYRX	GND
8	KYTCK	-KYTCK	GND
9	-SPOUT1	+SPIN1	+SPOUT1
10	-SPIN1	GND	GND
11	GND	GND	GND
12	-SPIN2	+SPOUT2	+SPIN2
13	-SPOUT2	GND	GND
14	GND	VIDEO	GND
15	GND	GND	GND
16	EXTWDIN	GND	EXTWDOUT1
17	GND	GND	GND
18	TX	RX	RTS
19	CTS	DSR	DTR
20	GND	GND	GND
21			
22			
23			
24			
25			
26			
27			
28	GND	GND	GND
29	+5V	+5V	+5V
30	+5V	+5V	+5V
31	GND	GND	GND
32	GND	DSC	GND

CPU-164

CN1A 96P

	A	B	C
1	GND	GND	GND
2	GND	GND	GND
3	+5V	+5V	+5V
4	+5V	+5V	+5V
5	KYRCK	-KYRCK	GND
6	KYTX	-KYTX	GND
7	KYRX	-KYRX	GND
8	KYTCK	-KYTCK	GND
9	-SPOUT1	+SPIN1	+SPOUT1
10	-SPIN1	GND	GND
11	GND	GND	GND
12	-SPIN2	+SPOUT2	+SPIN2
13	-SPOUT2	GND	GND
14	GND	VIDEO	GND
15	GND	GND	GND
16	EXTWDIN	GND	EXTWDOUT1
17	GND	GND	GND
18	TX	RX	RTS
19	CTS	DSR	DTR
20	GND	GND	GND
21	CPU RESET	VSYNC	
22	-DF RST	-ENSYSCLK	-EN_DD
23			
24			
25			
26			
27			
28	GND	GND	GND
29	+5V	+5V	+5V
30	+5V	+5V	+5V
31	GND	GND	GND
32	GND	DSC	GND

CN10 3P — FAN

1	FAN1
2	
3	GND

*1 RB1 33 1W — +15V

CN11 7P — POWER

1	+15V
2	AGND
3	-15V
4	+5V
5	+5V
6	GND
7	GND

CN12 9P

1	DD0
2	DD1
3	DD2
4	DD3
5	DD4
6	DD5
7	N.C
8	LEQ_SEL
9	PS_SEL

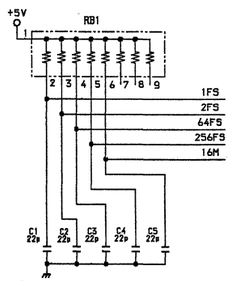

CN837

CN9 96P

	A	B	C
1	GND	GND	GND
2	GND	GND	GND
3	+5V	+5V	+5V
4	+5V	+5V	+5V
5	D11	D12	D13
6	D14	D15	D16
7	D17	D18	D19
8	D110	D111	D112
9	D113	D114	D115
10	D116	D1_INS	GND
11	PGM	PFL	AUX1
12	AUX2	INS_OUT	GND
13	KYRCK	-KYRCK	GND
14	KYTX	-KYTX	GND
15	KYRX	-KYRX	GND
16	KYTCK	-KYTCK	GND
17	-SPOUT1	+SPIN1	+SPOUT1
18	-SPIN1	-SPIN2	+SPOUT2
19	+SPIN2	-SPOUT2	GND
20	TX	RX	RTS
21	CTS	DSR	DTR
22	64FS	DD_PFL	256FS
23	-DF RST	GND	-ENSYSCLK
24	1FS	GND	2FS
25	GND	-EN_DD	GND
26	AGND	AGND	AGND
27	CTL_L (+)	AGND	CTL_R (+)
28	CTL_L (C)	AGND	CTL_R (C)
29	AGND	AGND	AGND
30	STG_L (+)	AGND	STG_R (+)
31	STG_L (C)	AGND	STG_R (C)
32	+15V	AGND	-15V

CN836

CN8 96P

	A	B	C
1	GND	GND	GND
2	GND	GND	GND
3	+5V	+5V	+5V
4	+5V	+5V	+5V
5	D11	D12	D13
6	D14	D15	D16
7	D17	D18	D19
8	D110	D111	D112
9	D113	D114	D115
10	D116	D1_INS	GND
11	PGM	PFL	AUX1
12	AUX2	INS_OUT	GND
13	KYRCK	-KYRCK	GND
14	KYTX	-KYTX	GND
15	KYRX	-KYRX	GND
16	KYTCK	-KYTCK	GND
17	-SPOUT1	+SPIN1	+SPOUT1
18	-SPIN1	-SPIN2	+SPOUT2
19	+SPIN2	-SPOUT2	GND
20	TX	RX	RTS
21	CTS	DSR	DTR
22	GND	GND	GND
23	GND	GND	GND
24	GND	GND	GND
25	GND	-EN_DD	GND
26	AGND	AGND	AGND
27	CTL_L (+)	AGND	CTL_R (+)
28	CTL_L (C)	AGND	CTL_R (C)
29	AGND	AGND	AGND
30	STG_L (+)	AGND	STG_R (+)
31	STG_L (C)	AGND	STG_R (C)
32	+15V	AGND	-15V

CN4B 96P

	A	B	C
1	1FS	GND	2FS
2	64FS	GND	256FS
3	GND	GND	GND
4	16M	GND	GND
5	TGSO	TGSI	RSV3
6	R/-W	GND	-RESET
7	-UDS	GND	-LDS
8	GND	GND	GND
9	INT63	INT64	INT65
10	INT66	INT67	GND
11	WREF	BS0	BS1
12	BS2	BS6	RSV9
13	-DC010	GND	-DCMIX
14	DD0	DD1	DD2
15	DD3	DD4	DD5
16	DD6	DD7	DD8
17	DD9	DD10	DD11
18	DD12	DD13	DD14
19	DD15	GND	GND
20	GND	DA1	DA2
21	DA3	DA4	DA5
22	DA6	DA7	DA8
23	DA9	DA10	DA11
24	DA12	DA13	DA14
25	DA15	GND	GND
26			
27	AGND	AGND	AGND
28	+15V	AGND	-15V
29	BACKUP	+5V	+5V
30	+5V	+5V	+5V
31	GND	GND	GND
32	GND	GND	GND

CN3B 96P

	A	B	C
1	1FS	GND	2FS
2	64FS	GND	256FS
3	GND	GND	GND
4	16M	GND	GND
5	TGSO	TGSI	RSV3
6	R/-W	GND	-RESET
7	-UDS	GND	-LDS
8	GND	GND	GND
9	INT63	INT64	INT65
10	INT66	INT67	GND
11	WREF	BS0	BS1
12	BS2	BS6	RSV9
13	-DC010	GND	-DCMIX
14	DD0	DD1	DD2
15	DD3	DD4	DD5
16	DD6	DD7	DD8
17	DD9	DD10	DD11
18	DD12	DD13	DD14
19	DD15	GND	GND
20	GND	DA1	DA2
21	DA3	DA4	DA5
22	DA6	DA7	DA8
23	DA9	DA10	DA11
24	DA12	DA13	DA14
25	DA15	GND	GND
26			
27	AGND	AGND	AGND
28	+15V	AGND	-15V
29	BACKUP	+5V	+5V
30	+5V	+5V	+5V
31	GND	GND	GND
32	GND	GND	GND

CN2B

	A	B	C
1	1FS	GND	2FS
2	64FS	GND	256FS
3	GND	GND	GND
4	16M	GND	GND
5	TGSO	TGSI	RSV3
6	R/-W	GND	-RESET
7	-UDS	GND	-LDS
8	GND	GND	GND
9	INT63	INT64	INT65
10	INT66	INT67	GND
11	WREF	BS0	BS1
12	BS2	BS6	RSV9
13	-DC010	GND	-DCMIX
14	DD0	DD1	DD2
15	DD3	DD4	DD5
16	DD6	DD7	DD8
17	DD9	DD10	DD11
18	DD12	DD13	DD14
19	DD15	GND	GND
20	GND	DA1	DA2
21	DA3	DA4	DA5
22	DA6	DA7	DA8
23	DA9	DA10	DA11
24	DA12	DA13	DA14
25	DA15	GND	GND
26			
27	AGND	AGND	AGND
28	+15V	AGND	-15V
29	BACKUP	+5V	+5V
30	+5V	+5V	+5V
31	GND	GND	GND
32	GND	GND	GND

CN1B 96P

	A	B	C
1	1FS	GND	2FS
2	64FS	GND	256FS
3	GND	GND	GND
4	16M	GND	GND
5	TGSO	TGSI	RSV3
6	R/-W	GND	-RESET
7	-UDS	GND	-LDS
8	GND	GND	GND
9	INT63	INT64	INT65
10	INT66	INT67	GND
11	WREF	BS0	BS1
12	BS2	BS6	RSV9
13	-DC010	GND	-DCMIX
14	DD0	DD1	DD2
15	DD3	DD4	DD5
16	DD6	DD7	DD8
17	DD9	DD10	DD11
18	DD12	DD13	DD14
19	DD15	GND	GND
20	GND	DA1	DA2
21	DA3	DA4	DA5
22	DA6	DA7	DA8
23	DA9	DA10	DA11
24	DA12	DA13	DA14
25	DA15	GND	GND
26		PS_SEL	LEQ_SEL
27	AGND	AGND	AGND
28	+15V	AGND	-15V
29	BACKUP	+5V	+5V
30	+5V	+5V	+5V
31	GND	GND	GND
32	GND	GND	GND

NOTE:

MARK	ADDRESS	CHANGED INFORMATION	SERIAL No.
*1	B3	R1 18 → 33	UC:10006- J :20004- EK:30013-

Processor Rack Mother
MB-481 BOARD (1/3)

BOARD NO. 1-649-773-11
DMX-B4008

4-60

MB-481 (2/3)
DMX-B4008 PROCESSOR

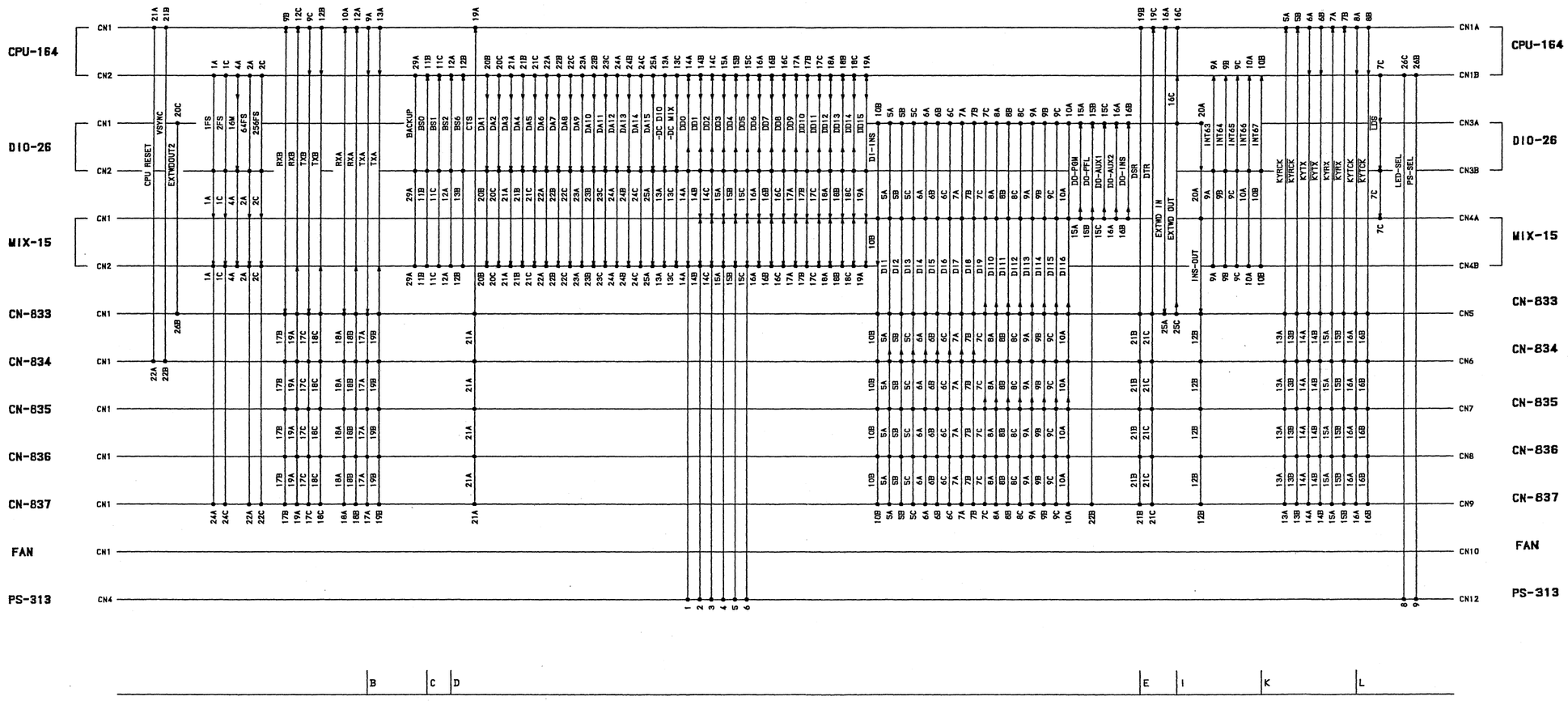

Processor Rack Mother
MB-481 BOARD (2/3)

BOARD NO. 1-649-773-11
DMX-B4008

4-61

MB-481 (3/3)
DMX-B4008 PROCESSOR

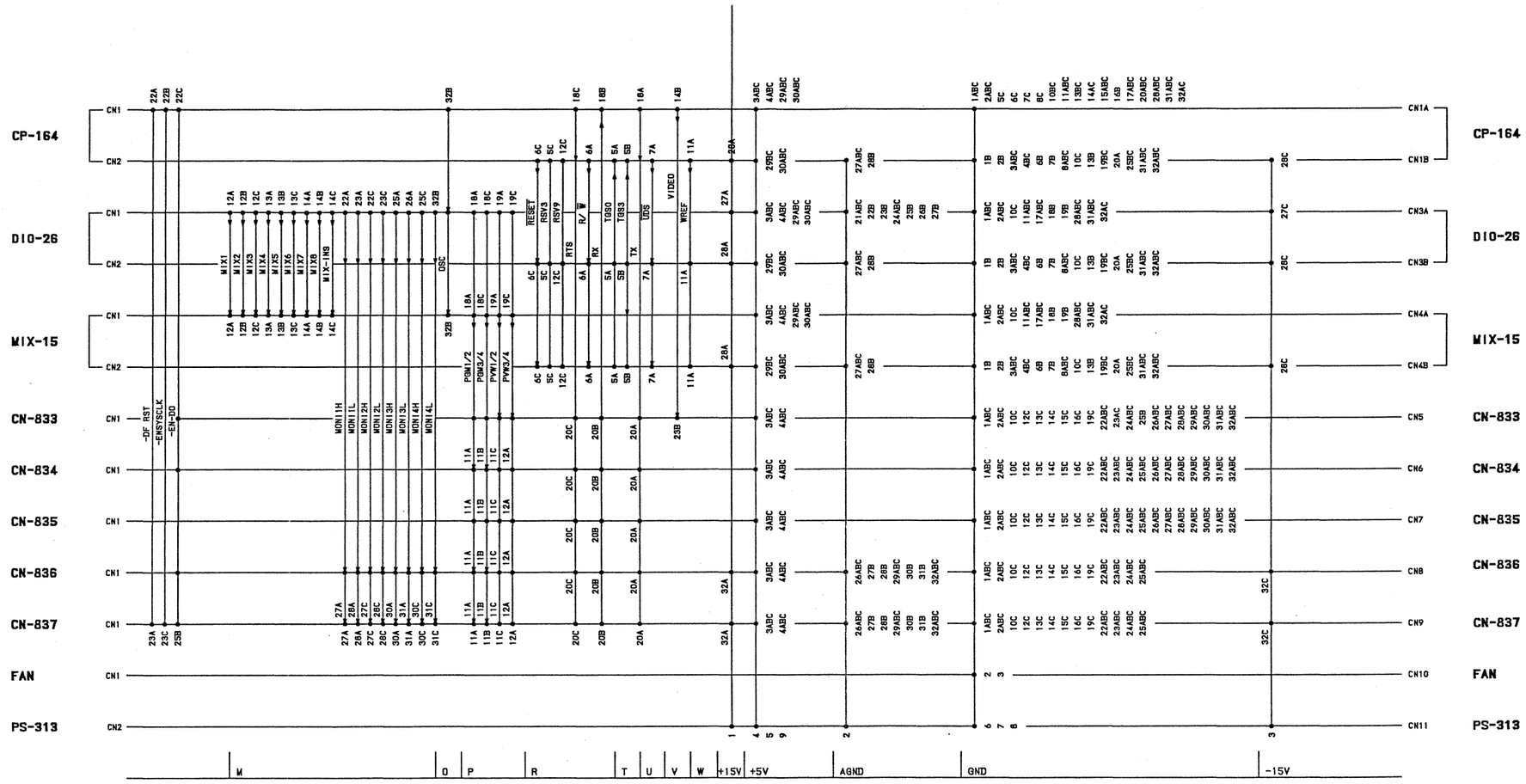

Processor Rack Mother
MB-481 BOARD (3/3)

BOARD NO. 1-649-773-11
DMX-B4008

4-62

CN-833
DMX-B4008 PROCESSOR

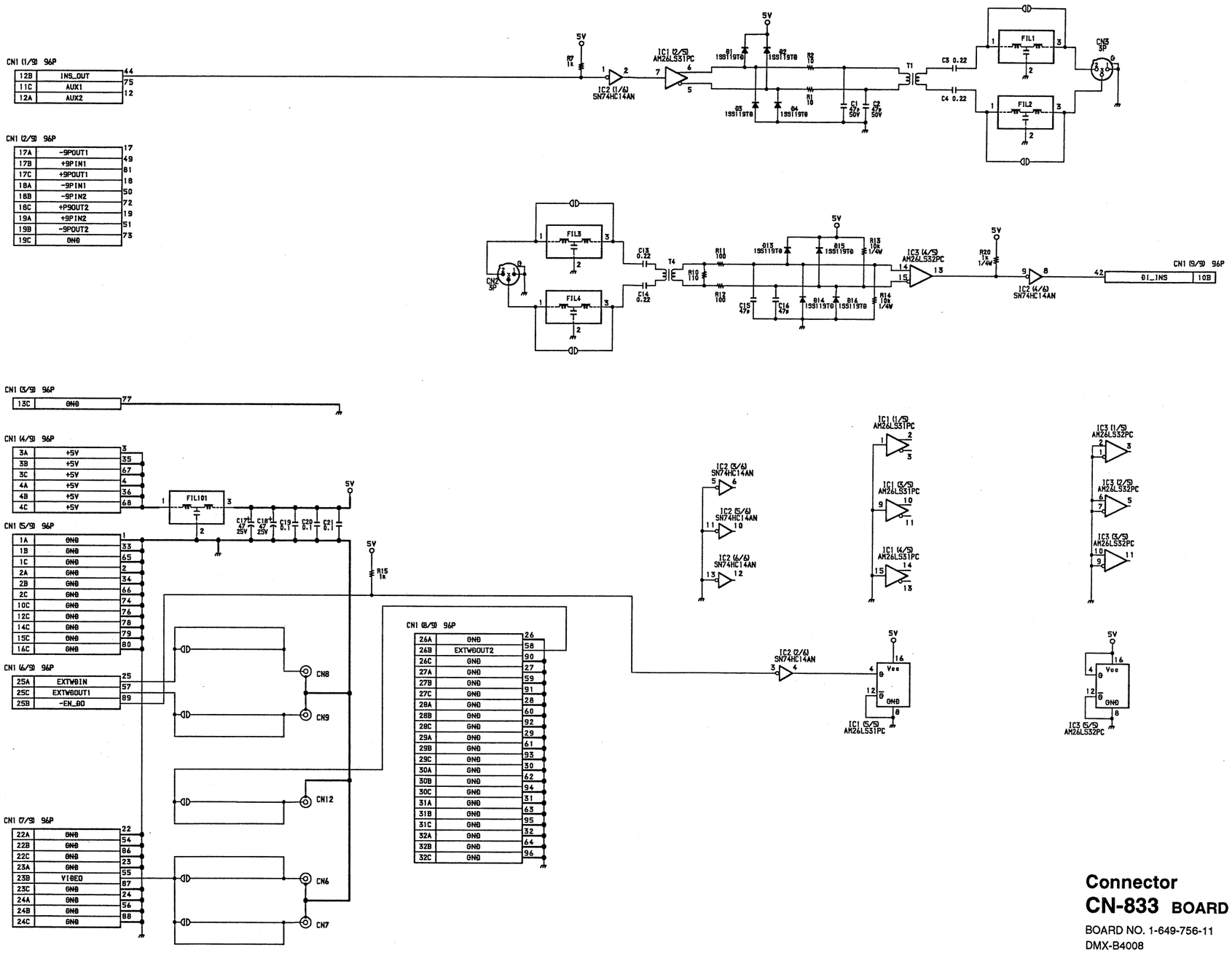

Connector
CN-833 BOARD

BOARD NO. 1-649-756-11
DMX-B4008

4-63

CN-834 DMX-B4008 PROCESSOR

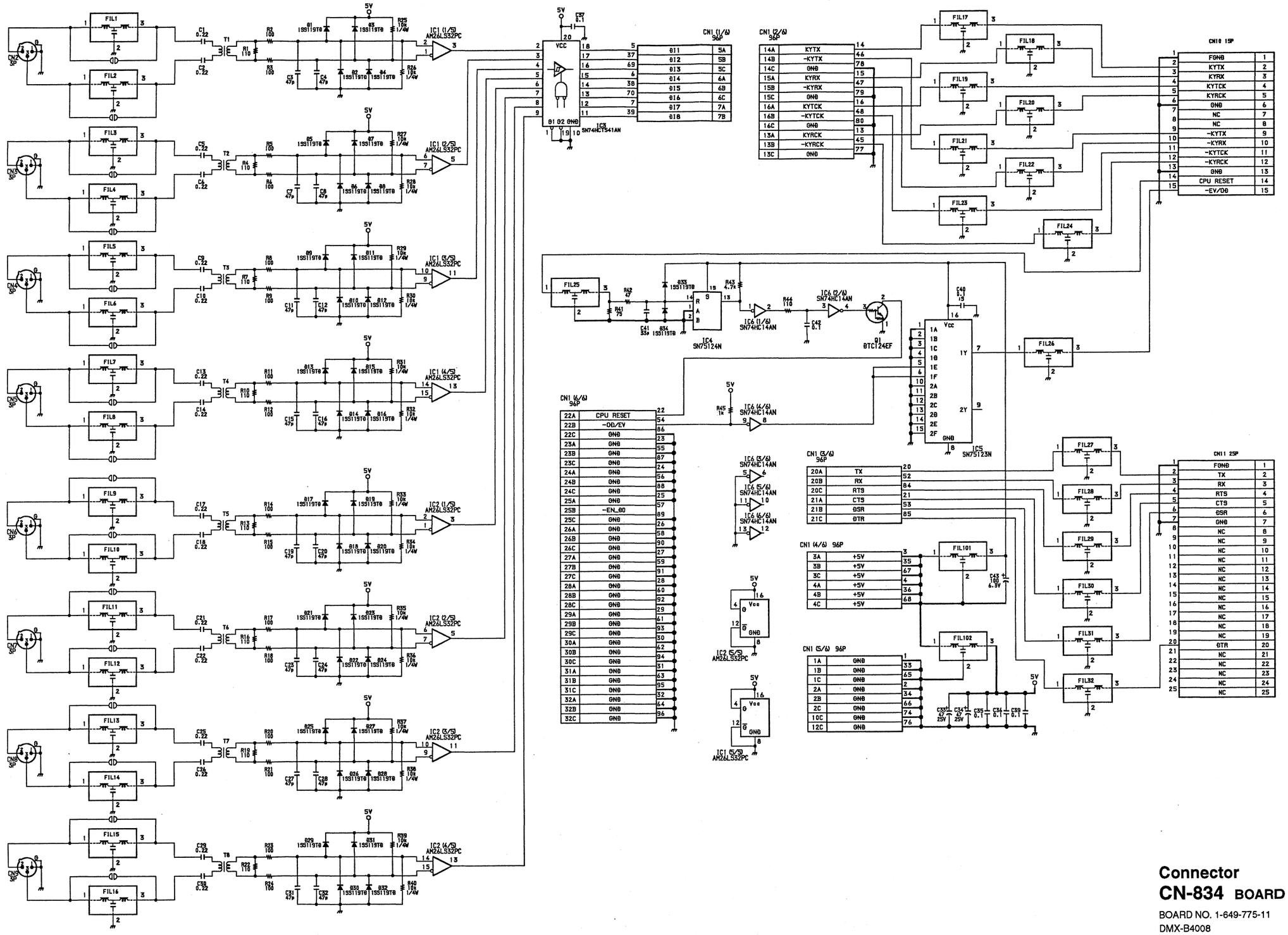

Connector
CN-834 BOARD

BOARD NO. 1-649-775-11
DMX-B4008

4-64

CN-835 DMX-B4008 PROCESSOR

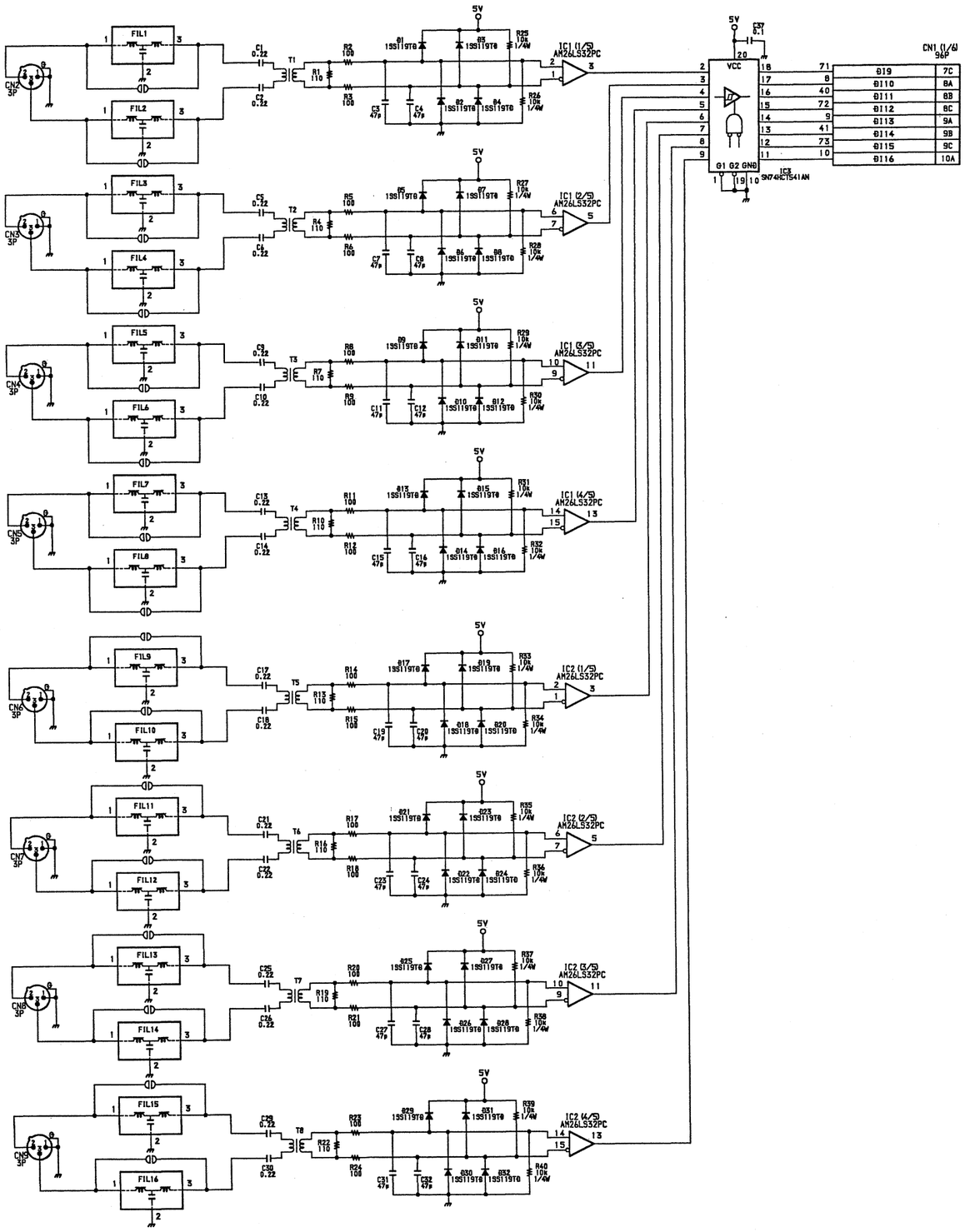

Connector
CN-835 BOARD

BOARD NO. 1-649-777-11
DMX-B4008

CN-836 DMX-B4008 PROCESSOR

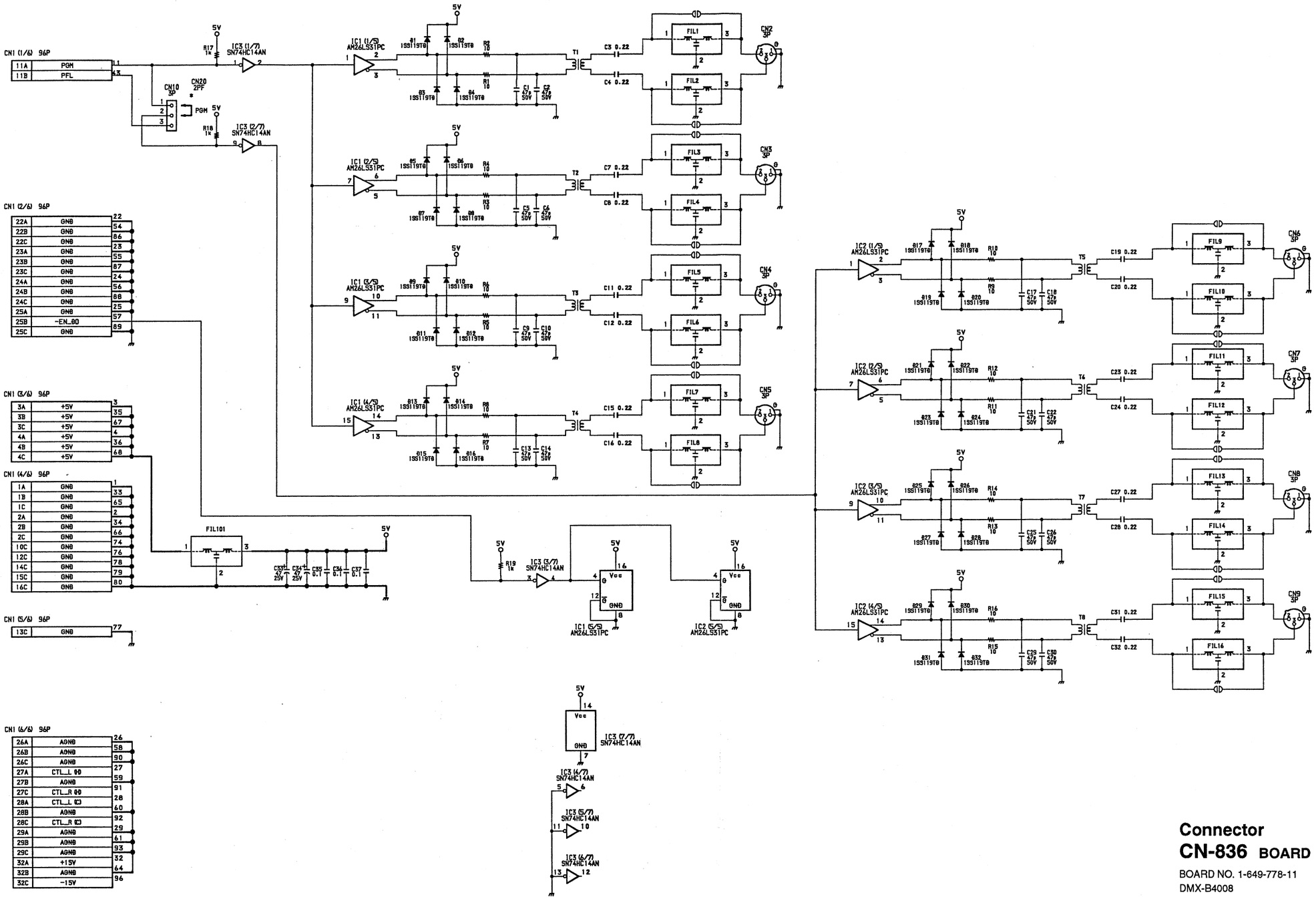

Connector
CN-836 BOARD

BOARD NO. 1-649-778-11
DMX-B4008

4-66

CN-837 DMX-B4008 PROCESSOR

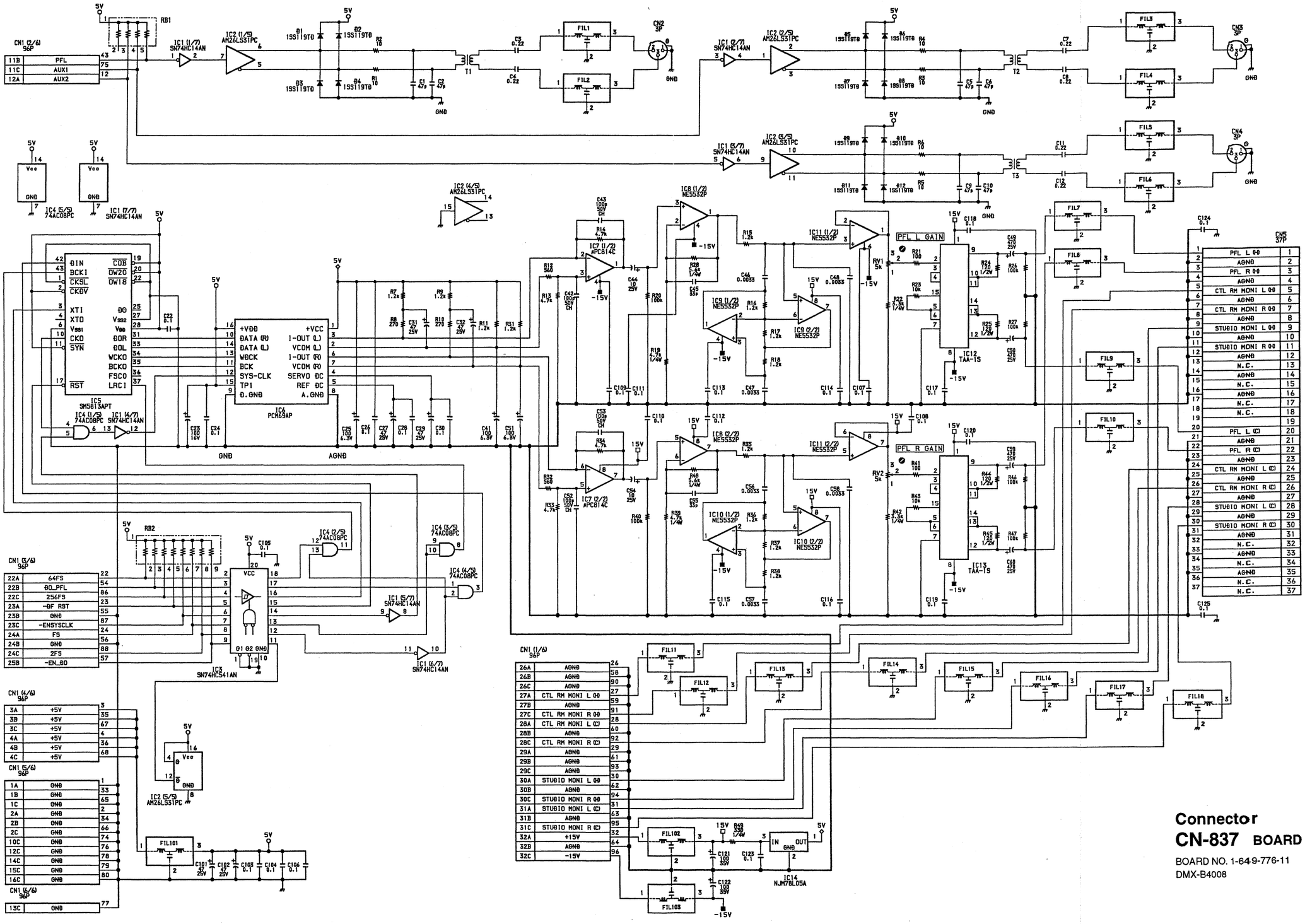

Connector
CN-837 BOARD

BOARD NO. 1-649-776-11
DMX-B4008

4-67

FRAME WIRING (1/2) DP-131, PS-313
DMX-B4008 PROCESSOR

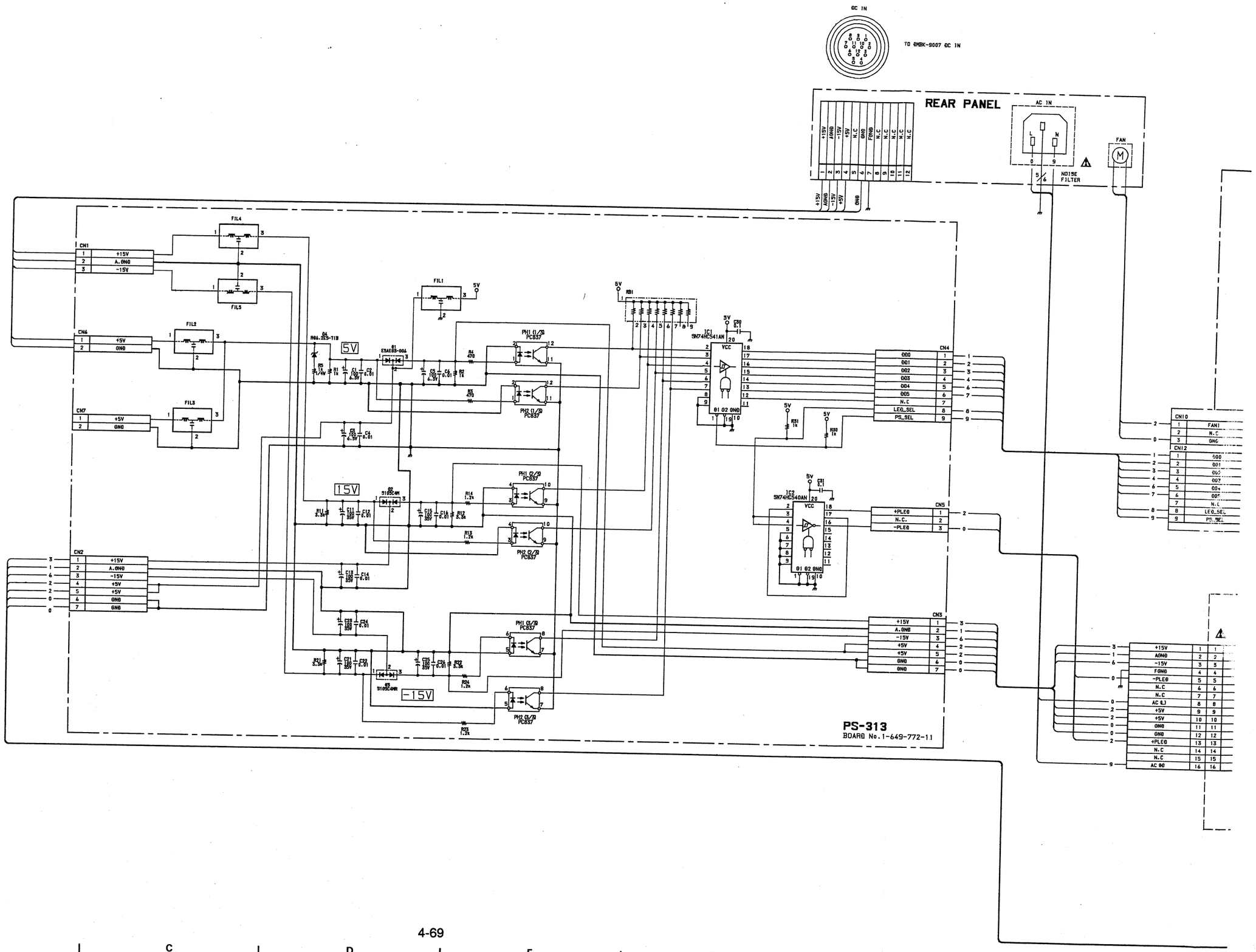

A B C D E F G H

FRAME WIRING (1/2) DP-131, PS-313
DMX-B4008 PROCESSOR

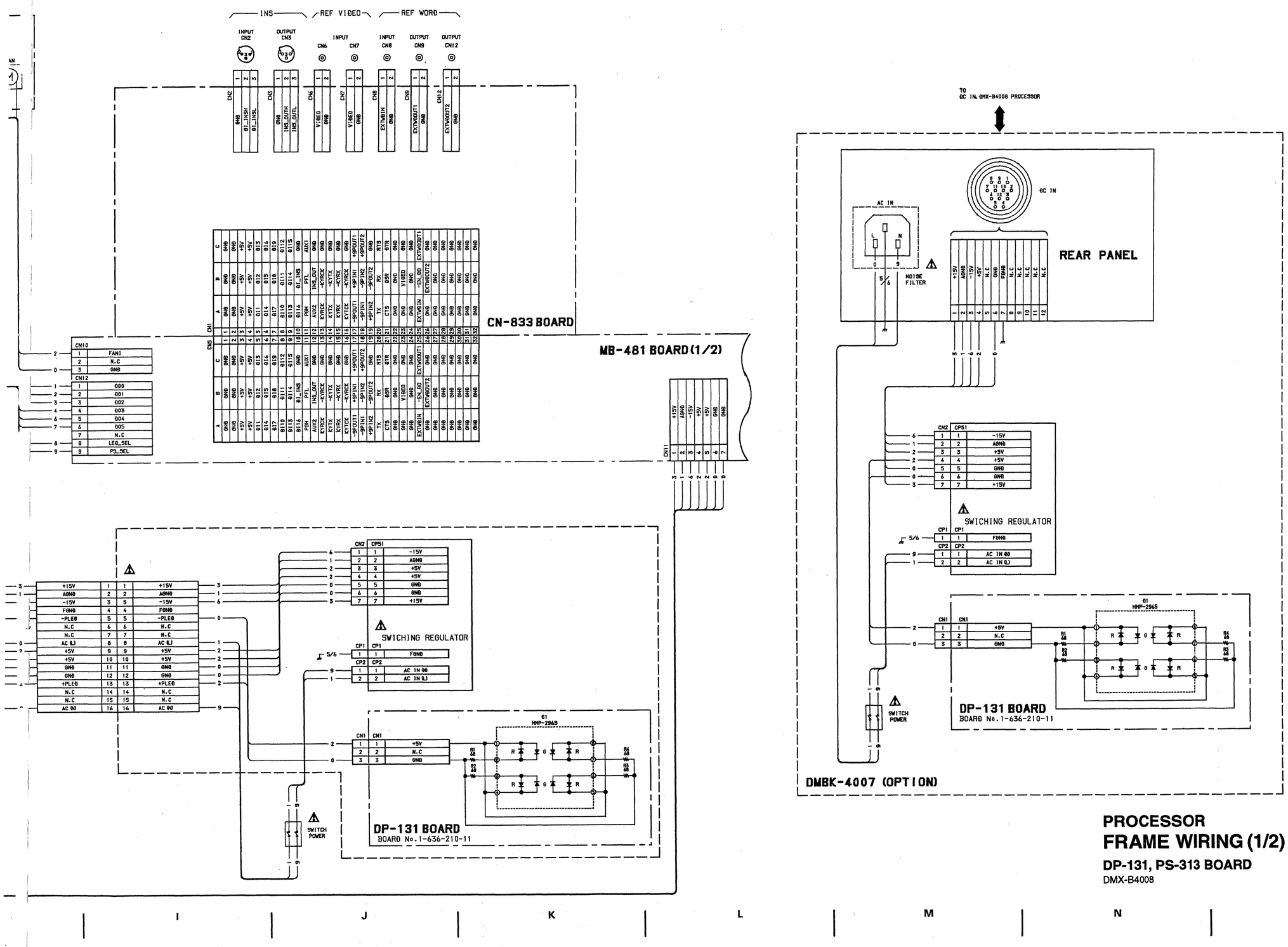

PROCESSOR
FRAME WIRING (1/2)
DP-131, PS-313 BOARD
DMX-B4008

FRAME WIRING (2/2)
DMX-B4008 PROCESSOR

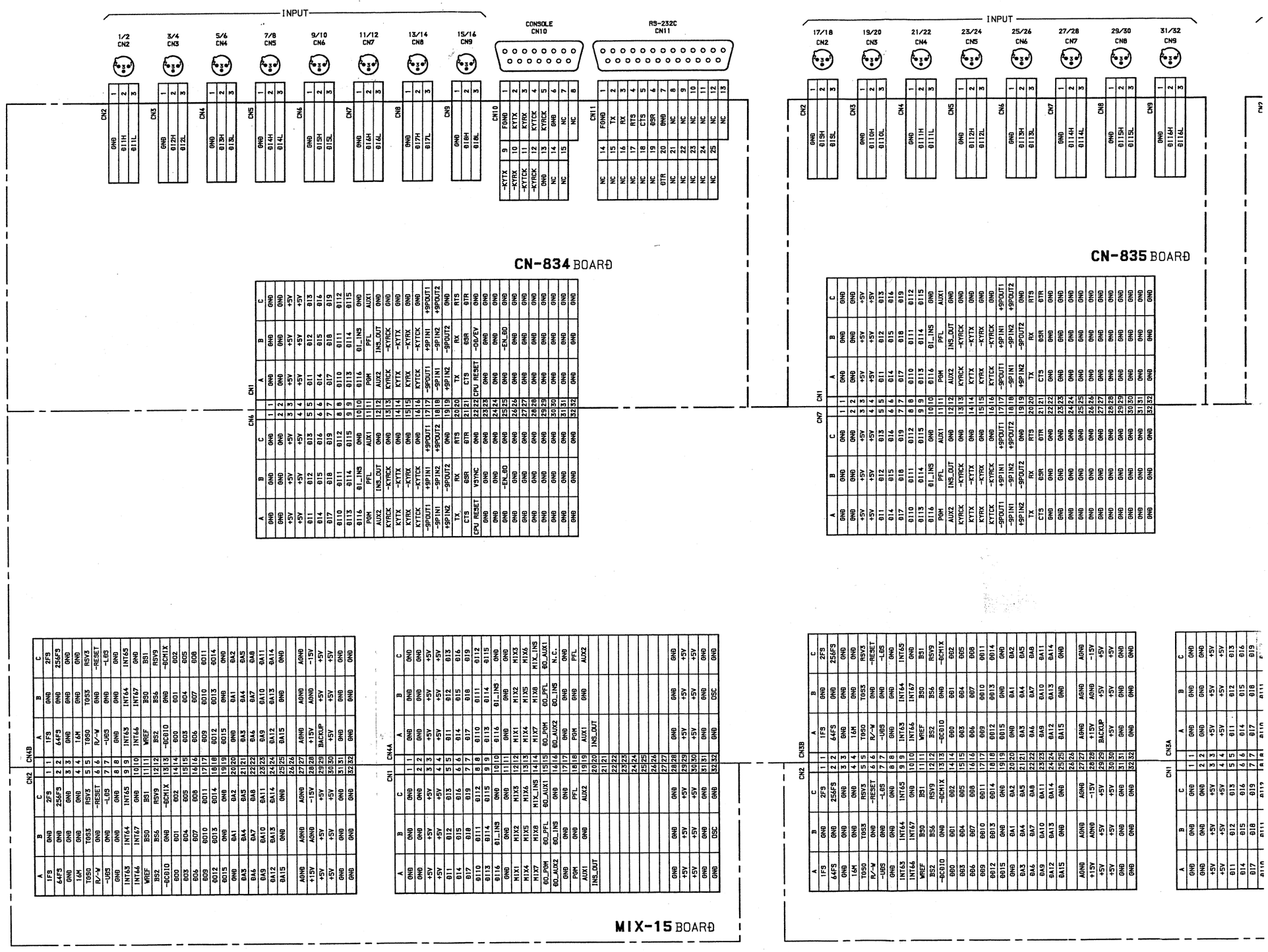

FRAME WIRING (2/2)
DMX-B4008 PROCESSOR

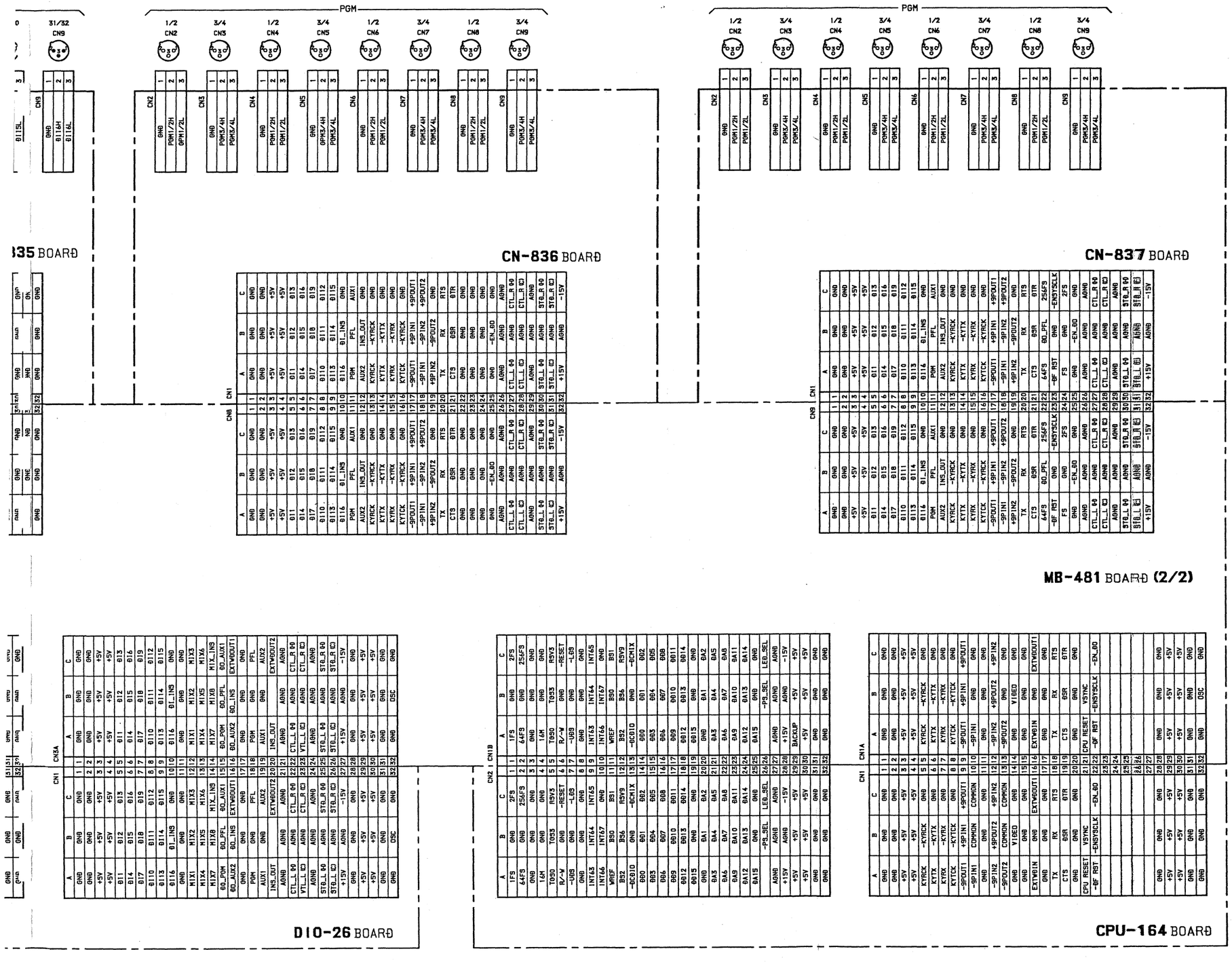

PROCESSOR FRAME WIRING (2/2)

DMX-B4008, DMBK-4007

CPU-144 (1/11)
DMX-B4016 PROCESSOR

4-3. DMX-B4016 PROCESSOR

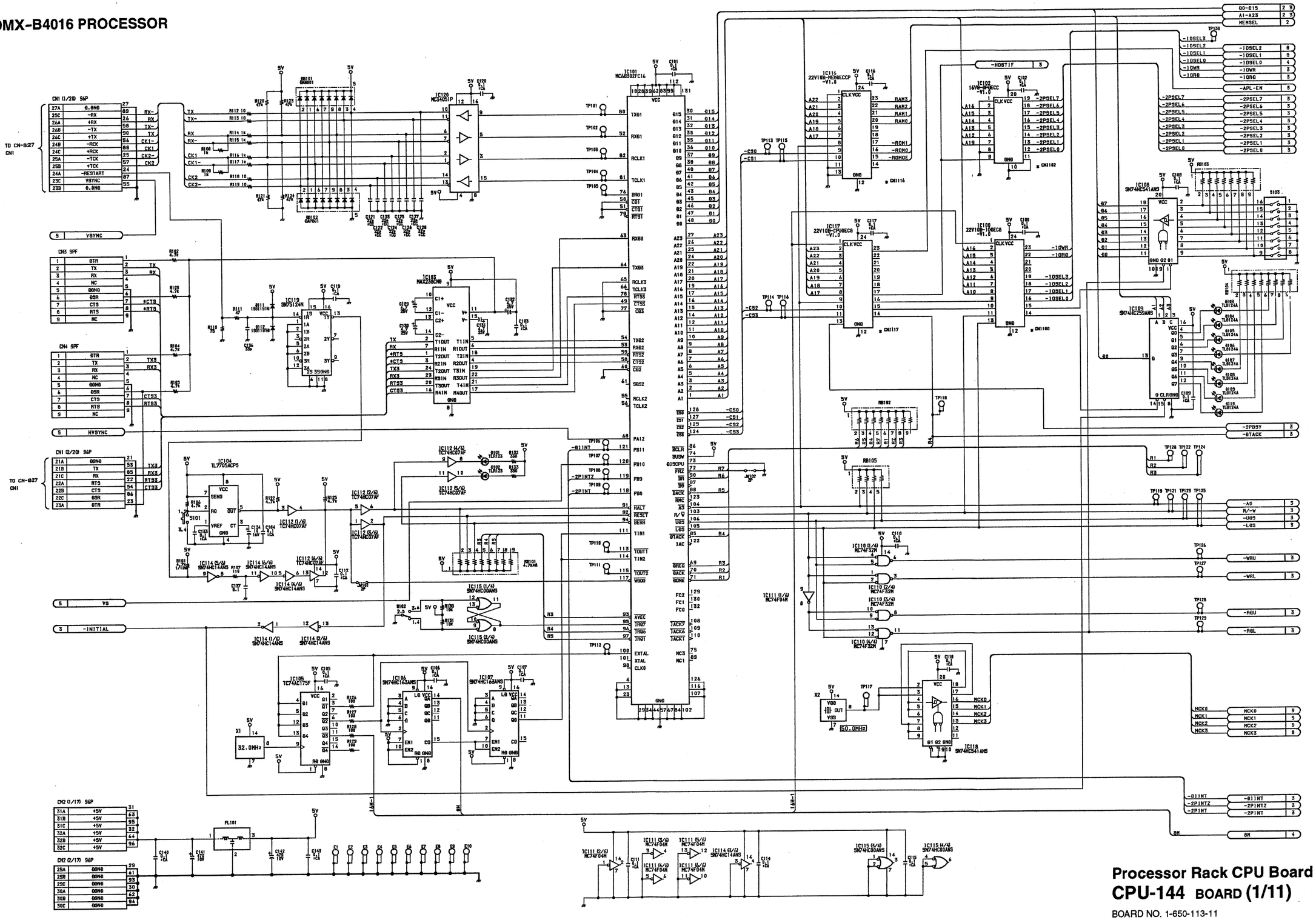

Processor Rack CPU Board
CPU-144 BOARD (1/11)

BOARD NO. 1-650-113-11
DMX-B4016

4-71

CPU-144 (2/11)
DMX-B4016 PROCESSOR

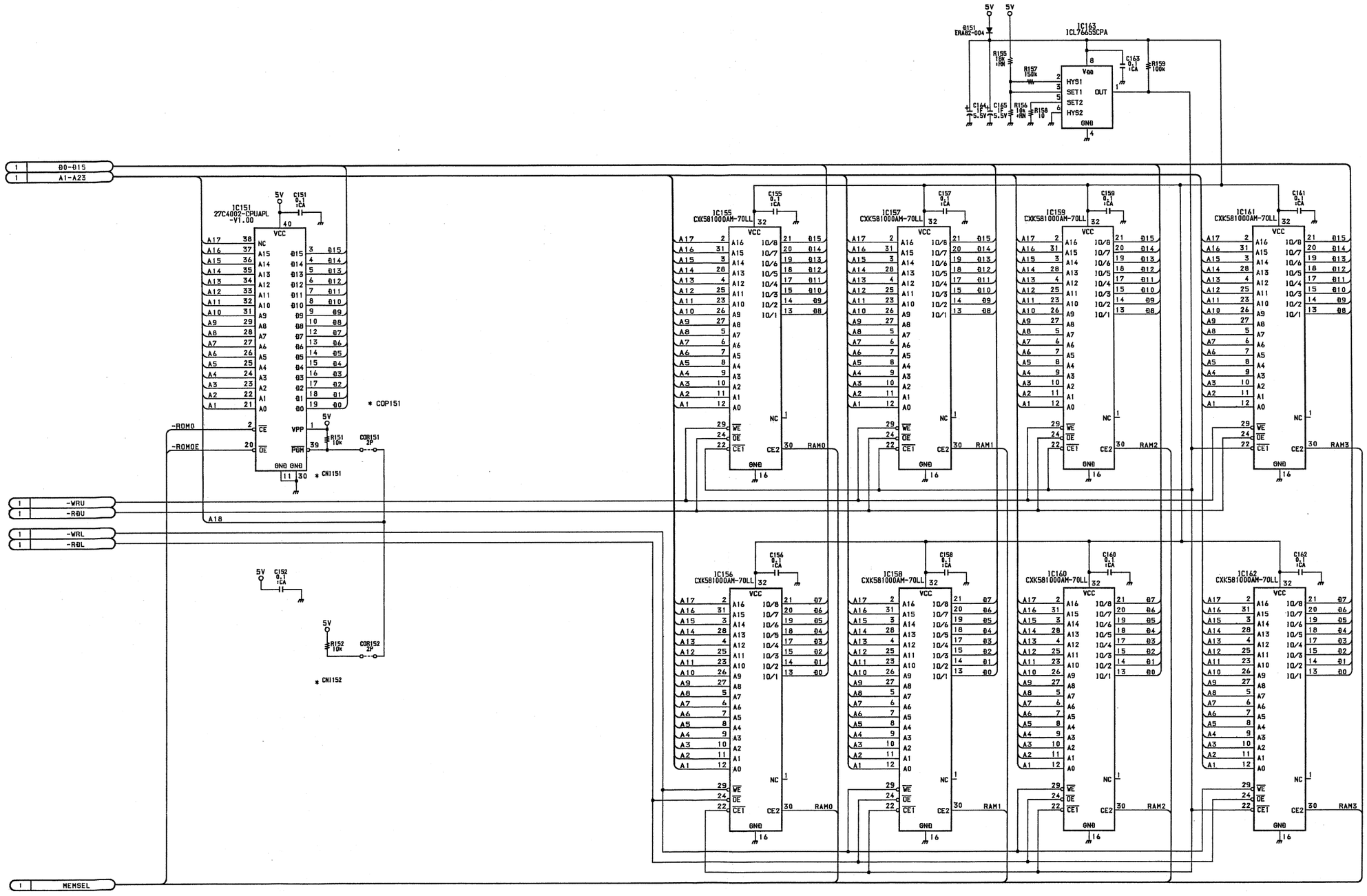

Processor Rack CPU Board
CPU-144 BOARD (2/11)

BOARD NO. 1-650-113-11
DMX-B4016

4-72

CPU-144 (3/11)
DMX-B4016 PROCESSOR

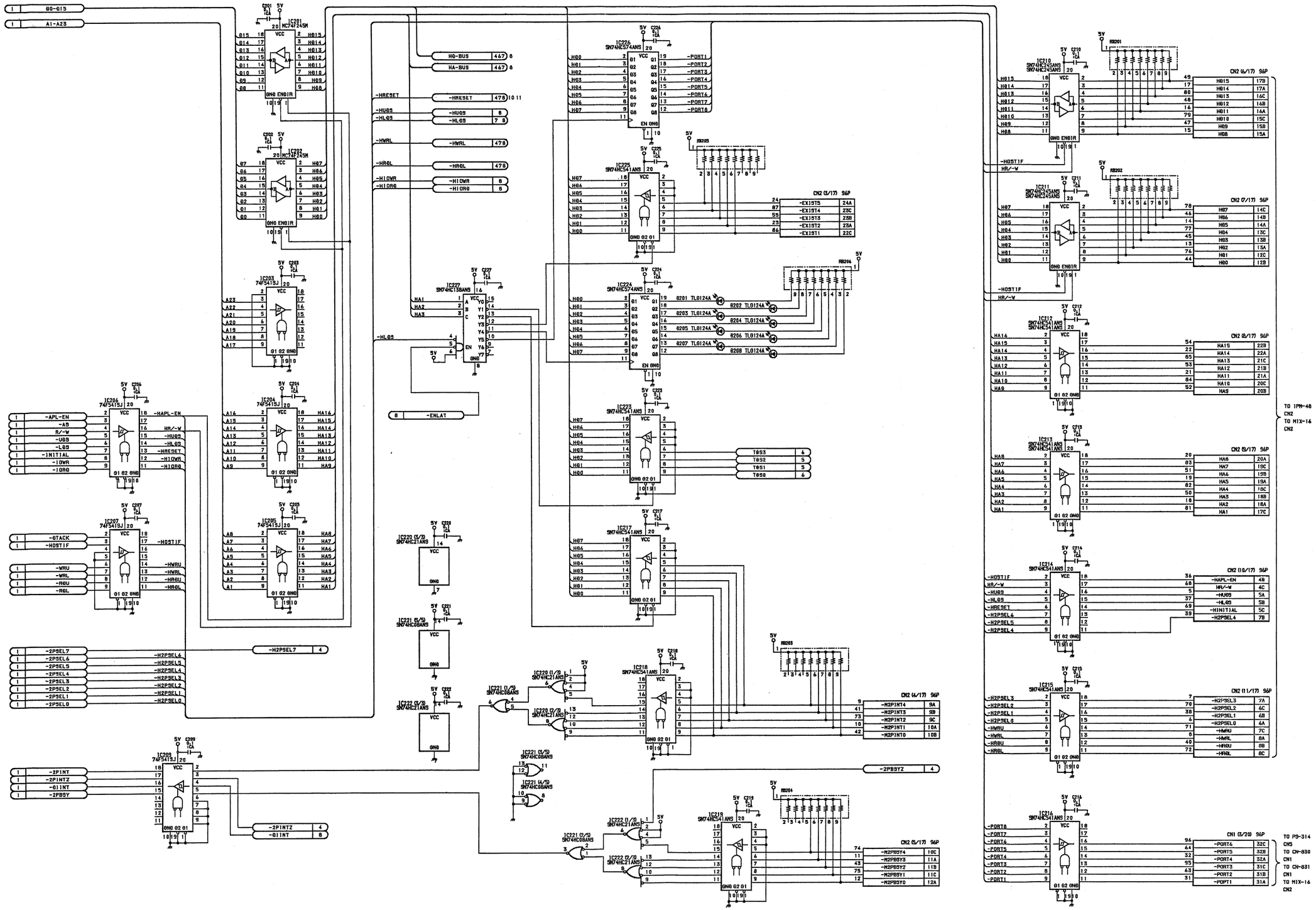

Processor Rack CPU Board
CPU-144 BOARD (3/11)

BOARD NO. 1-650-113-11
DMX-B4016

4-73

CPU-144 (4/11)
DMX-B4016 PROCESSOR

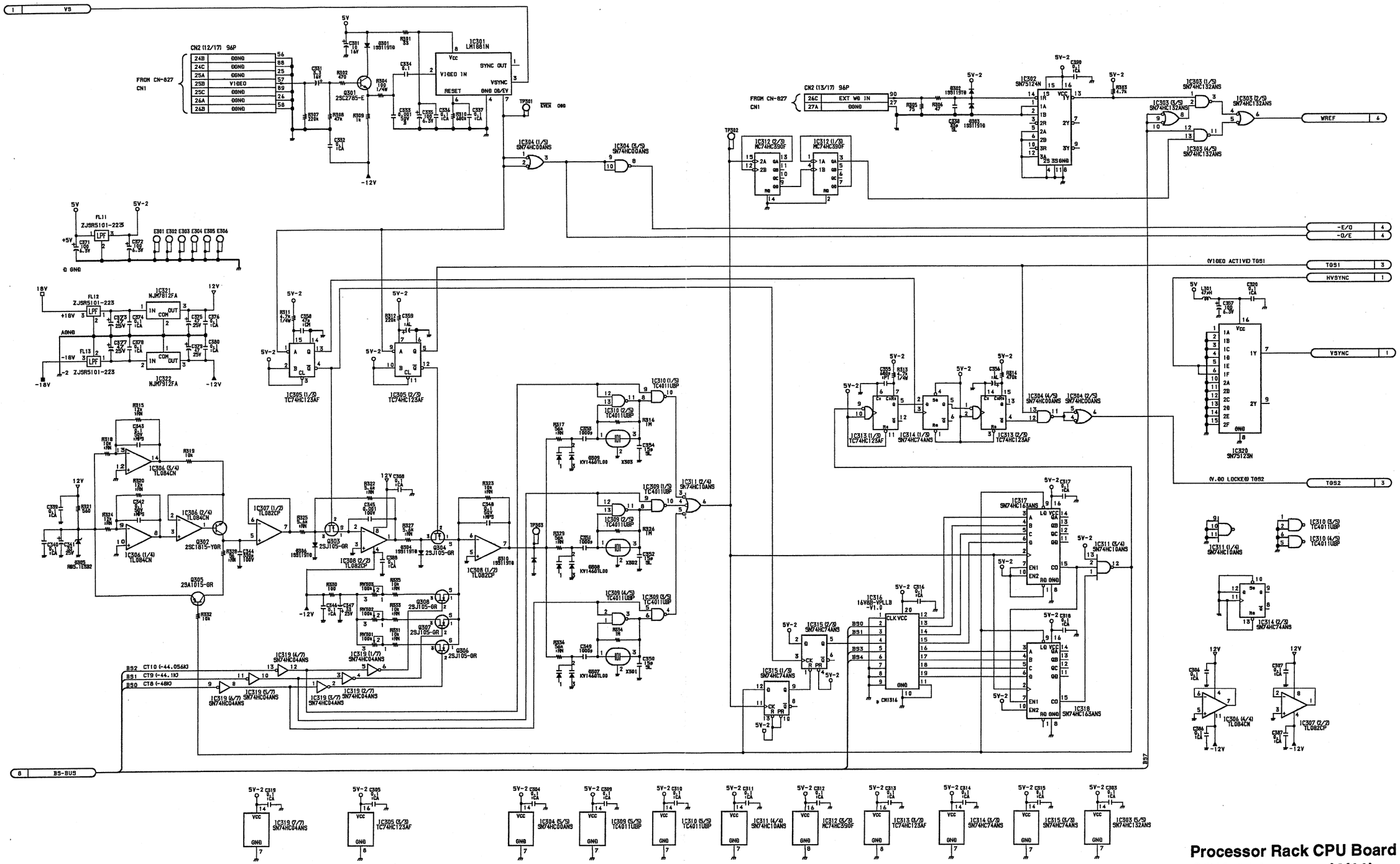

Processor Rack CPU Board
CPU-144 BOARD (4/11)

BOARD NO. 1-650-113-11
DMX-B4016

4-74

CPU-144 (5/11)
DMX-B4016 PROCESSOR

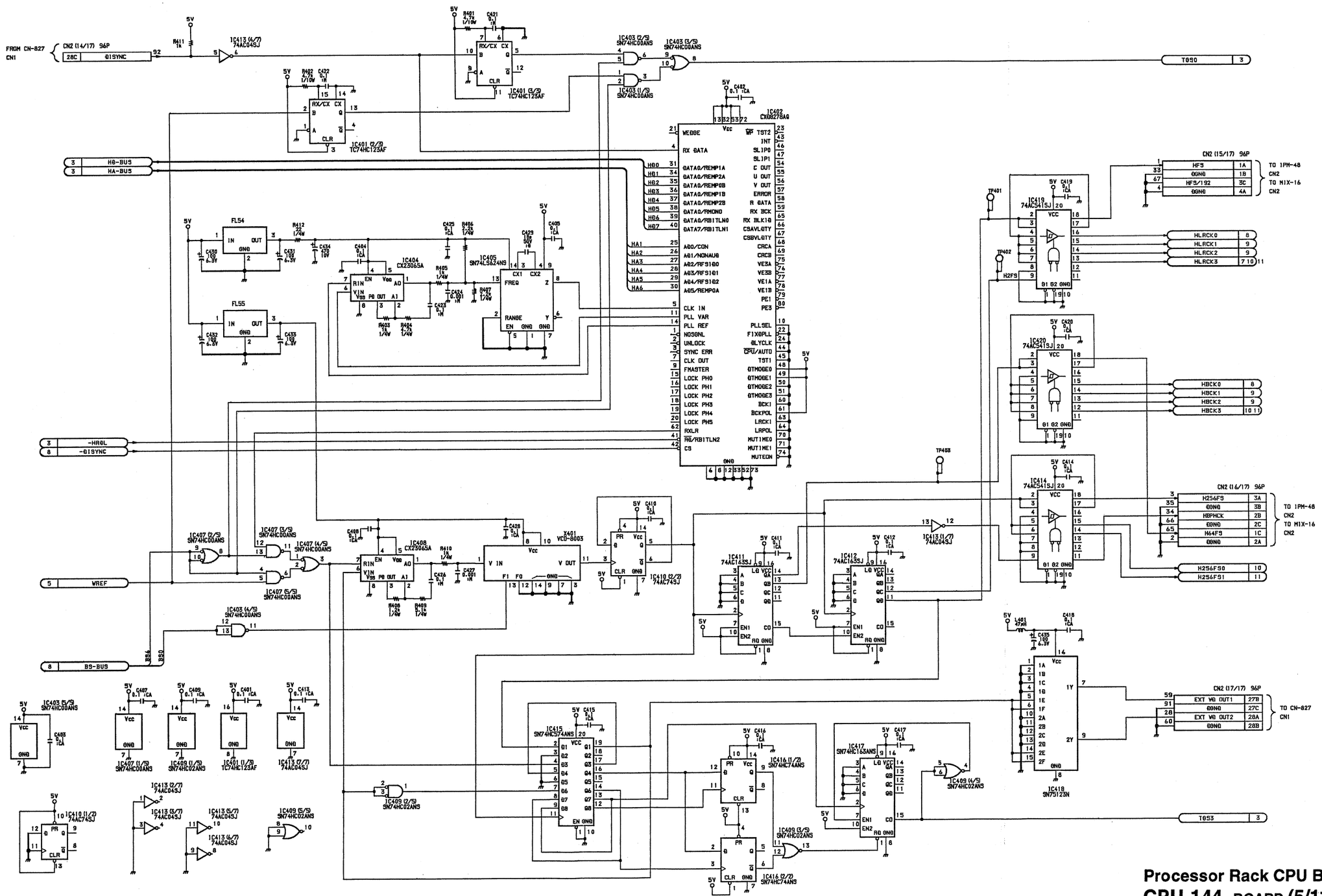

Processor Rack CPU Board
CPU-144 BOARD (5/11)

BOARD NO. 1-650-113-11
DMX-B4016

4-75

CPU-144 (6/11)
DMX-B4016 PROCESSOR

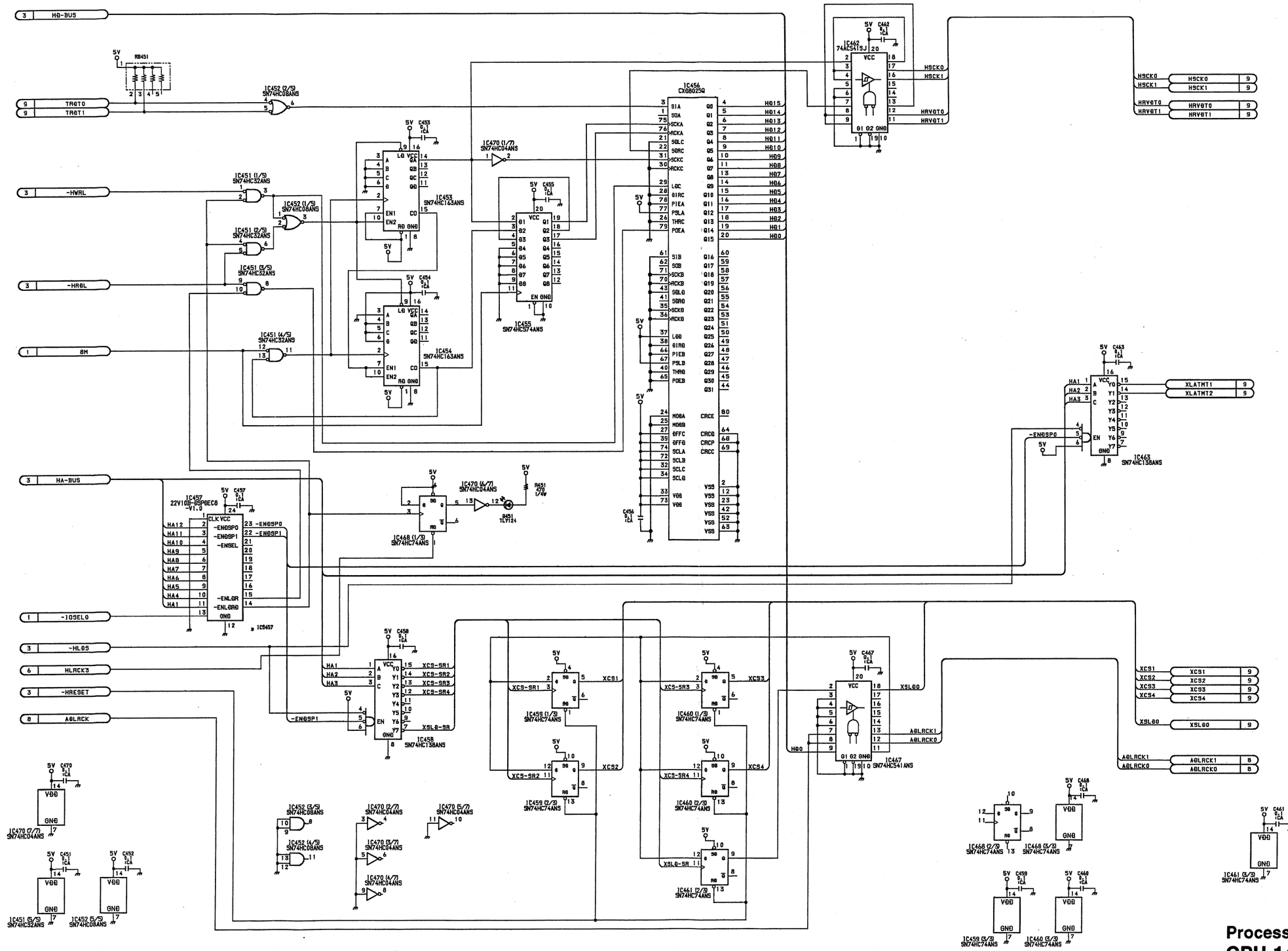

Processor Rack CPU Board
CPU-144 BOARD (6/11)

BOARD NO. 1-650-113-11
DMX-B4016

4-76

CPU-144 (7/11)
DMX-B4016 PROCESSOR

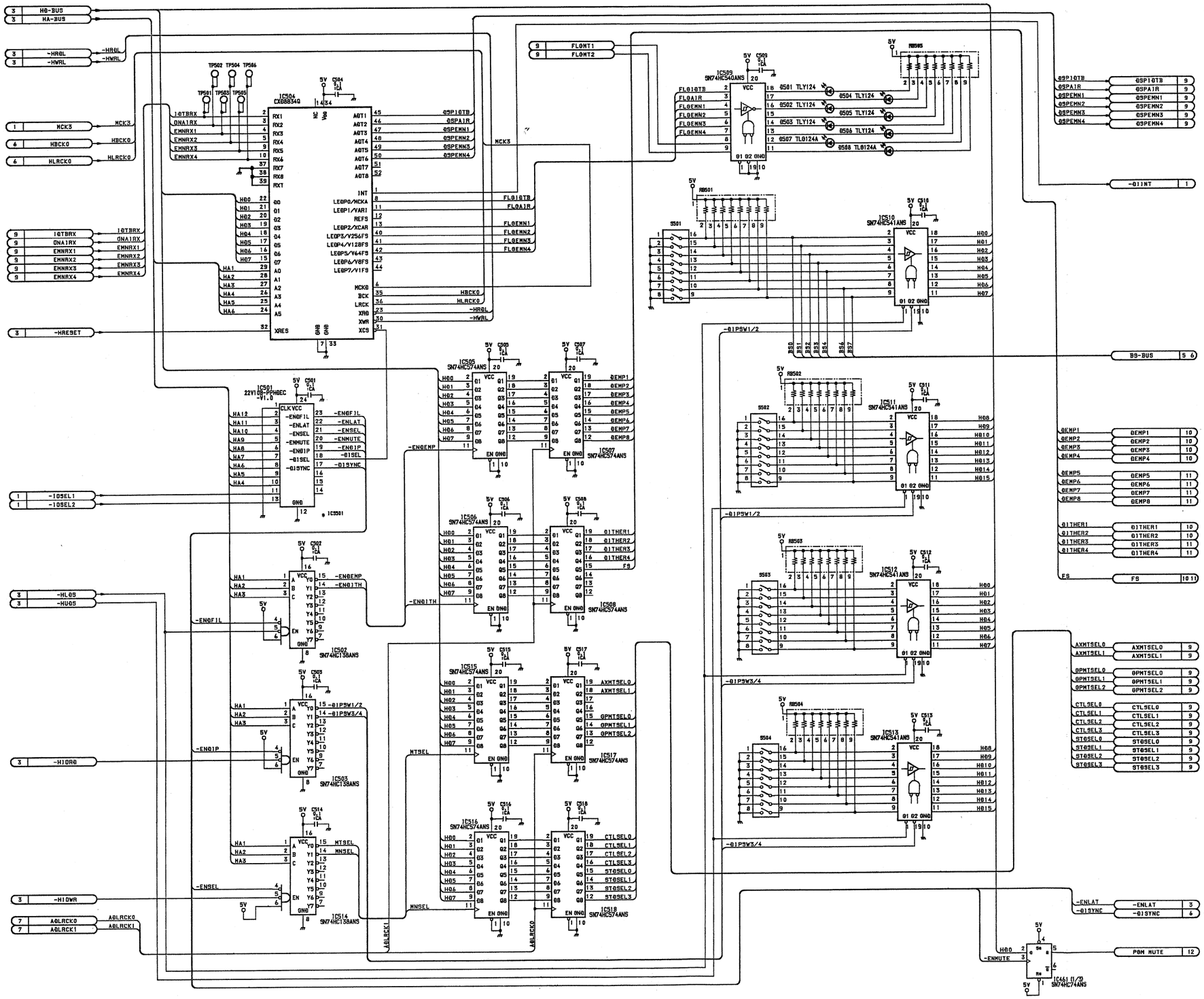

Processor Rack CPU Board
CPU-144 BOARD (7/11)

BOARD NO. 1-650-113-11
DMX-B4016

4-77

CPU-144 (8/11)
DMX-B4016 PROCESSOR

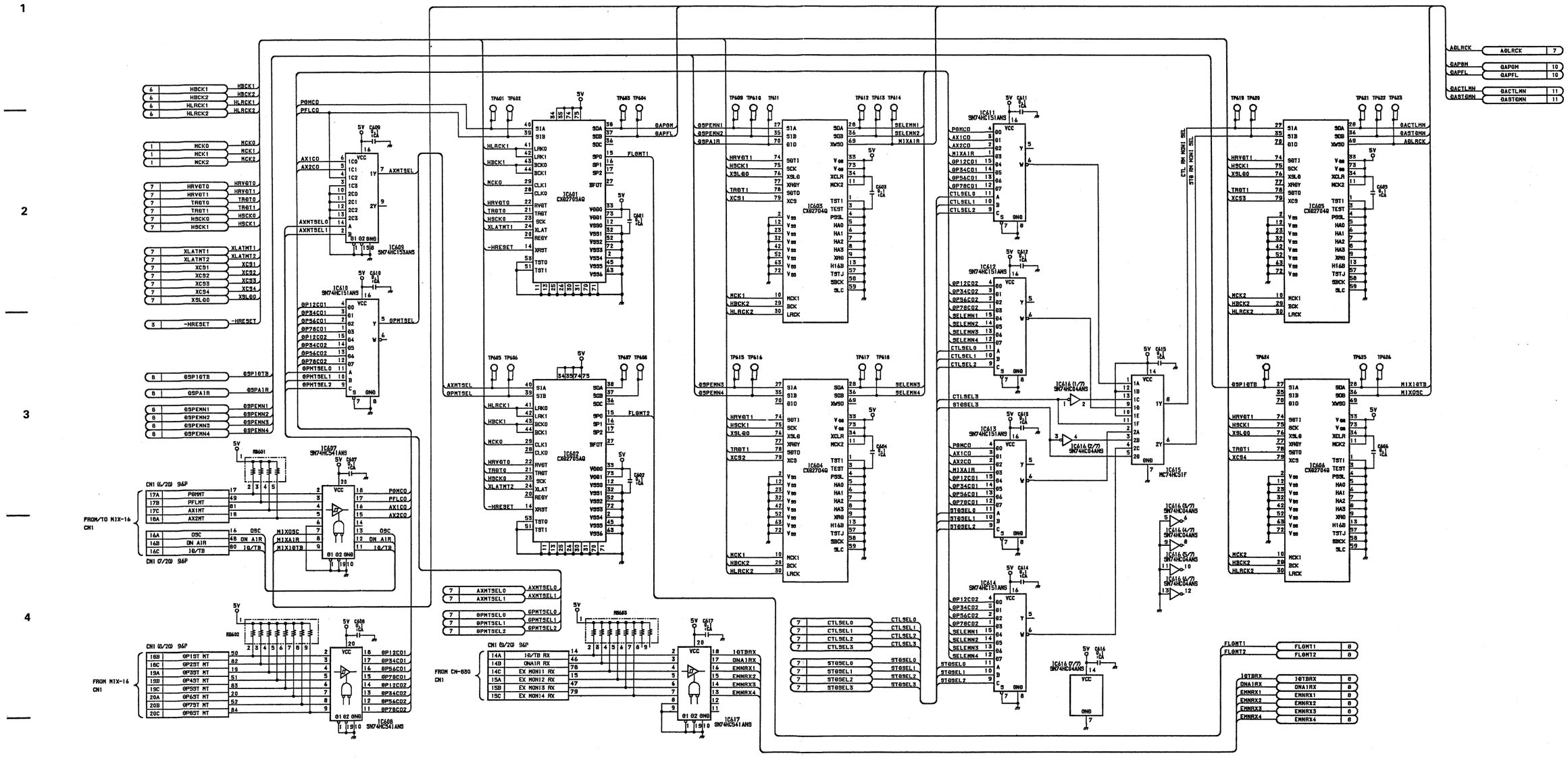

Processor Rack CPU Board
CPU-144 BOARD (8/11)

BOARD NO. 1-650-113-11
DMX-B4016

4-78

CPU-144 (9/11)
DMX-B4016 PROCESSOR

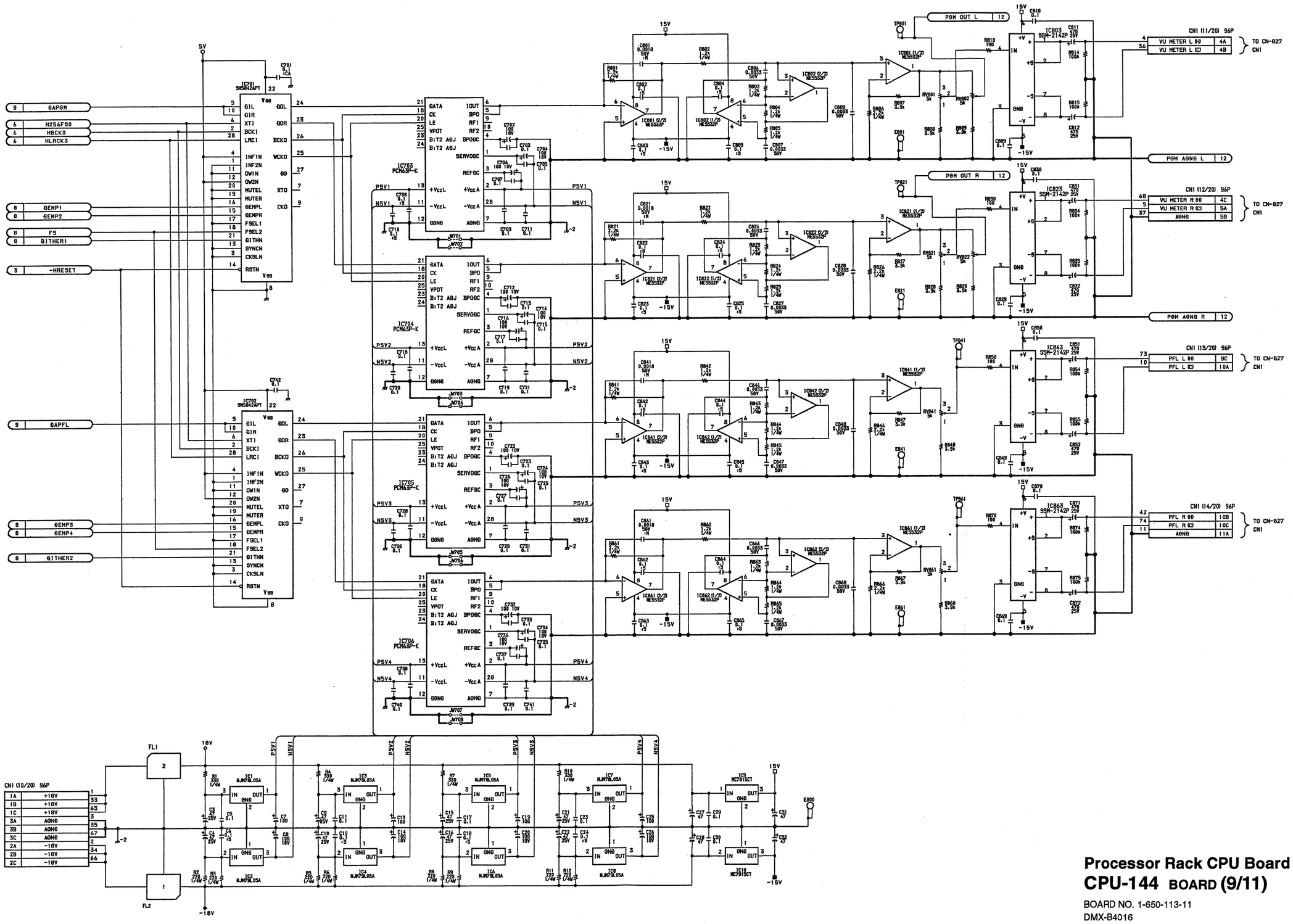

Processor Rack CPU Board
CPU-144 BOARD (9/11)

BOARD NO. 1-650-113-11
DMX-B4016

4-79

CPU-144 (10/11)
DMX-B4016 PROCESSOR

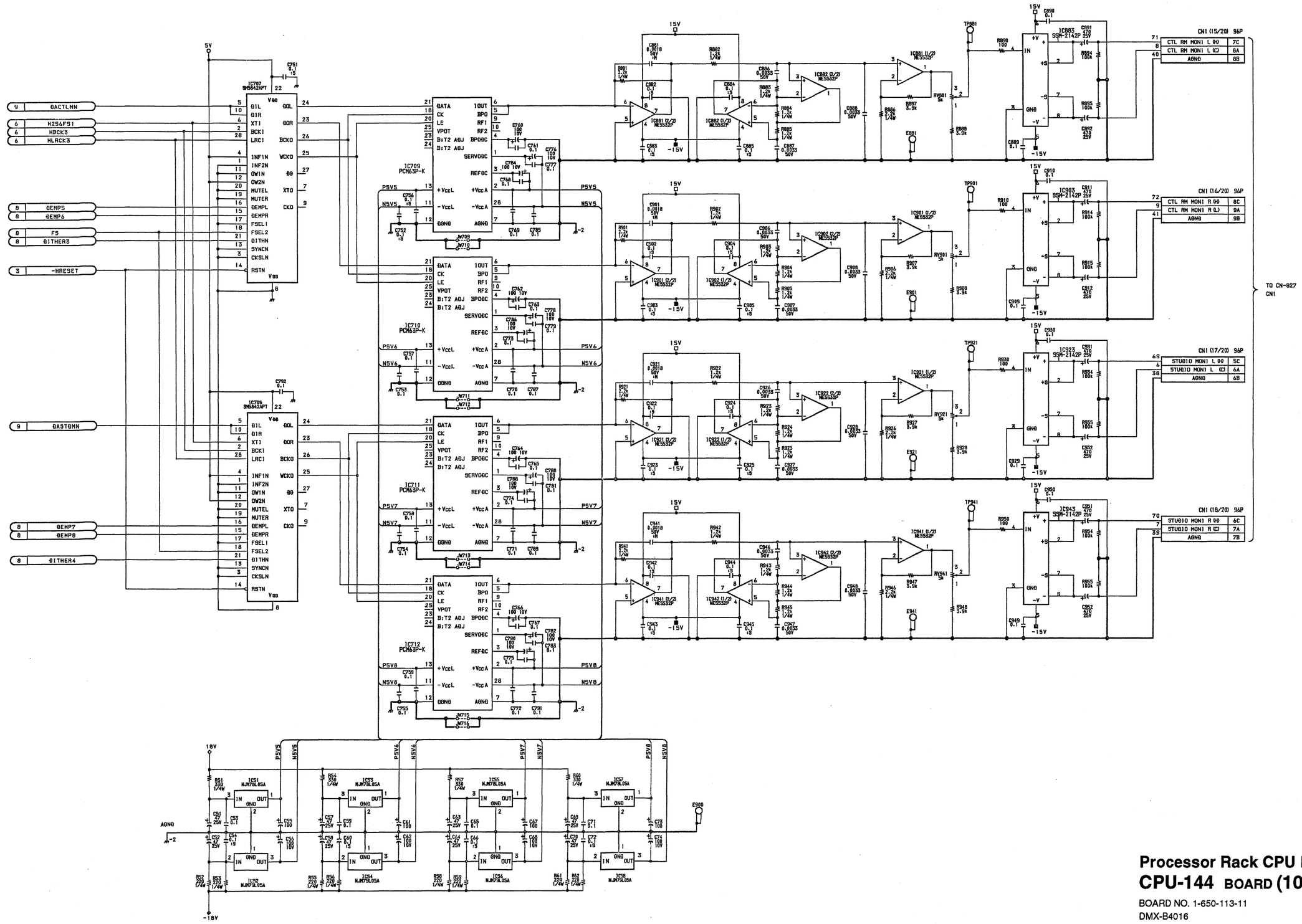

Processor Rack CPU Board
CPU-144 BOARD (10/11)

BOARD NO. 1-650-113-11
DMX-B4016

4-80

CPU-144 (11/11)
DMX-B4016 PROCESSOR

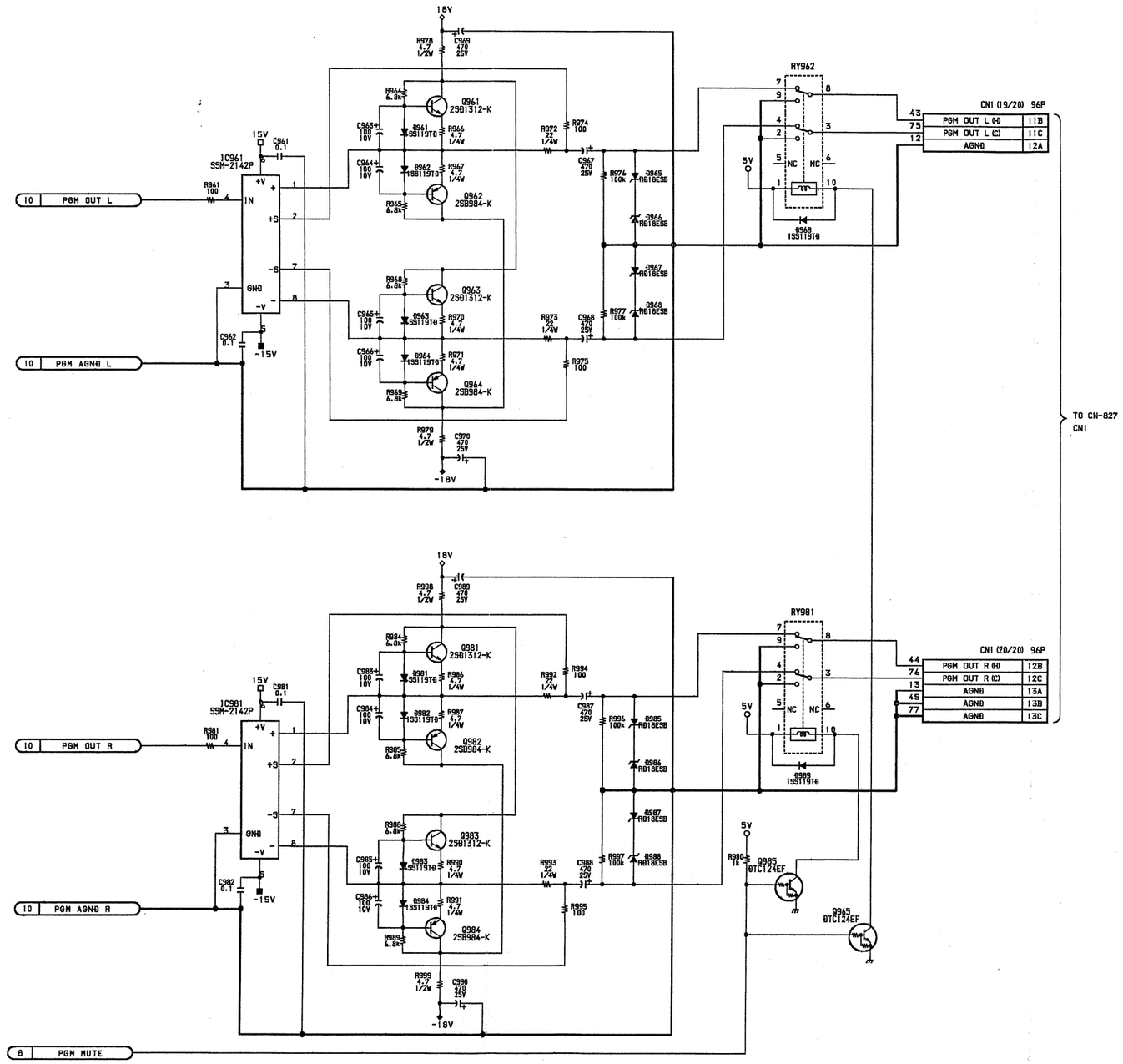

Processor Rack CPU Board
CPU-144 BOARD (11/11)

BOARD NO. 1-650-113-11
DMX-B4016

4-81

IPM-48 (1/11)
DMX-B4016 PROCESSOR, DMBK-4010 (OPTION)

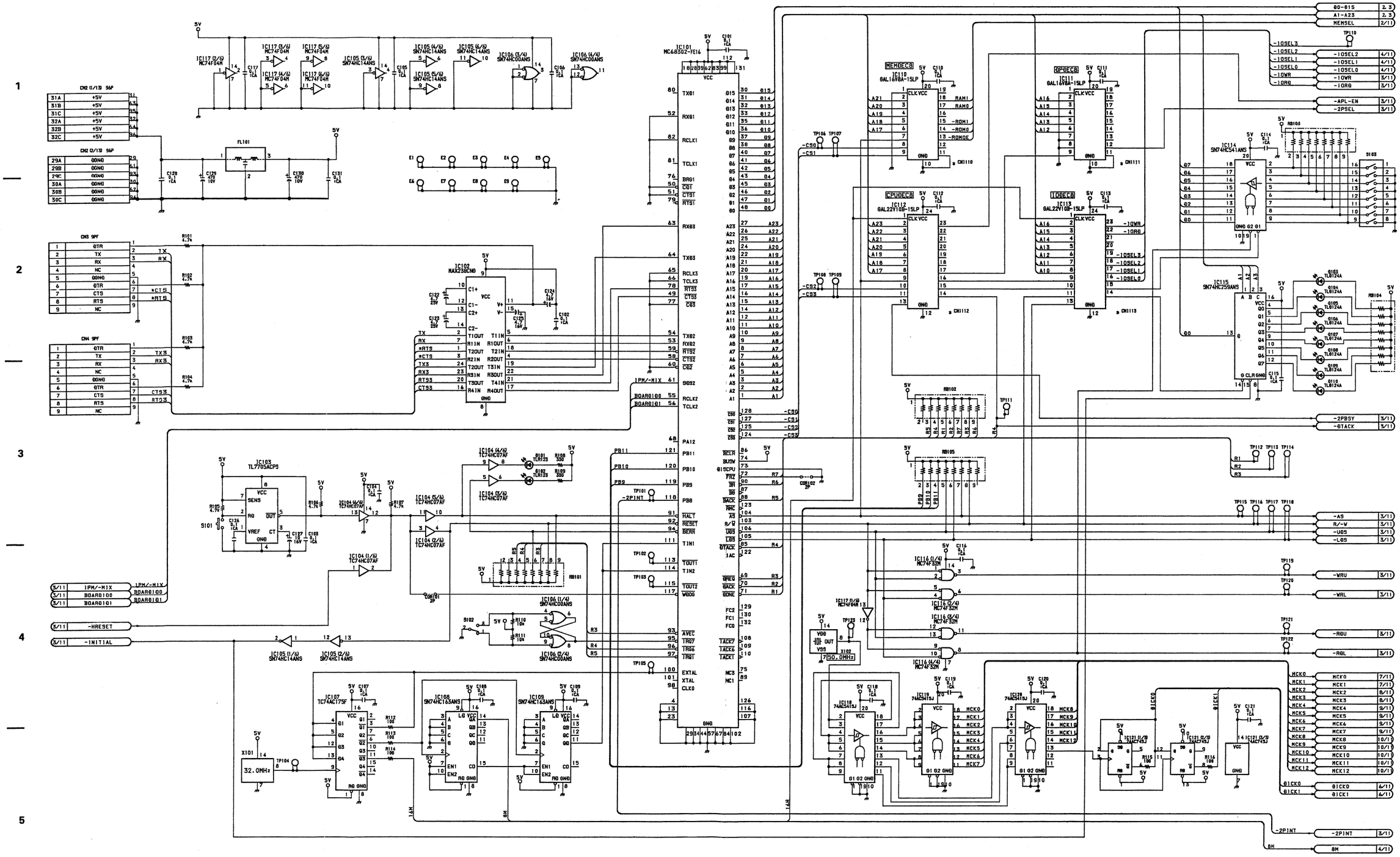

Digital Input Board
IPM-48 BOARD (1/11)

BOARD NO. 1-650-114-12
DMX-B4016, DMBK-4010

4-82

IPM-48 (2/11)
DMX-B4016 PROCESSOR, DMBK-4010 (OPTION)

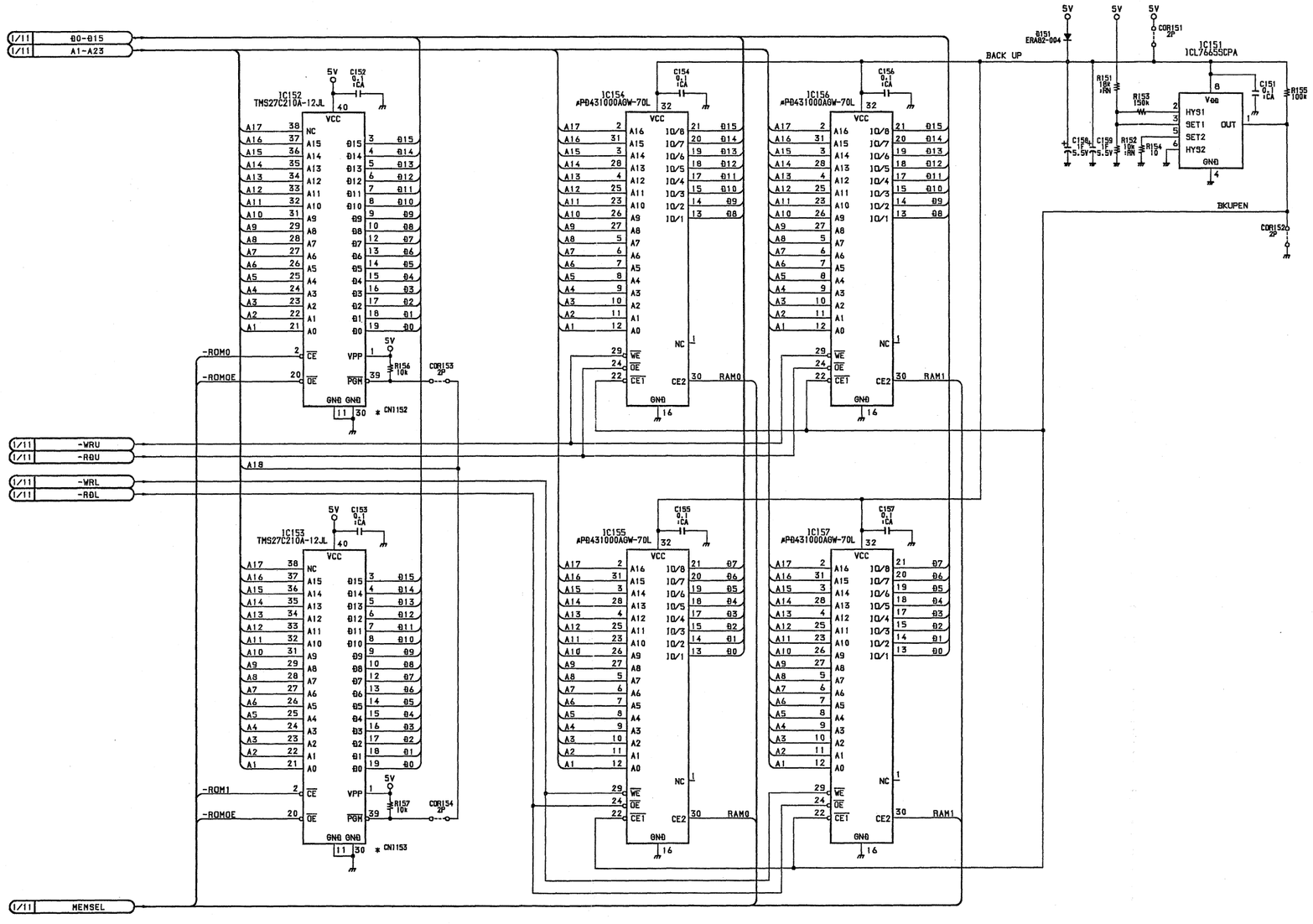

Digital Input Board
IPM-48 BOARD (2/11)

BOARD NO. 1-650-114-12
DMX-B4016, DMBK-4010

4-83

IPM-48 (3/11)
DMX-B4016 PROCESSOR, DMBK-4010 (OPTION)

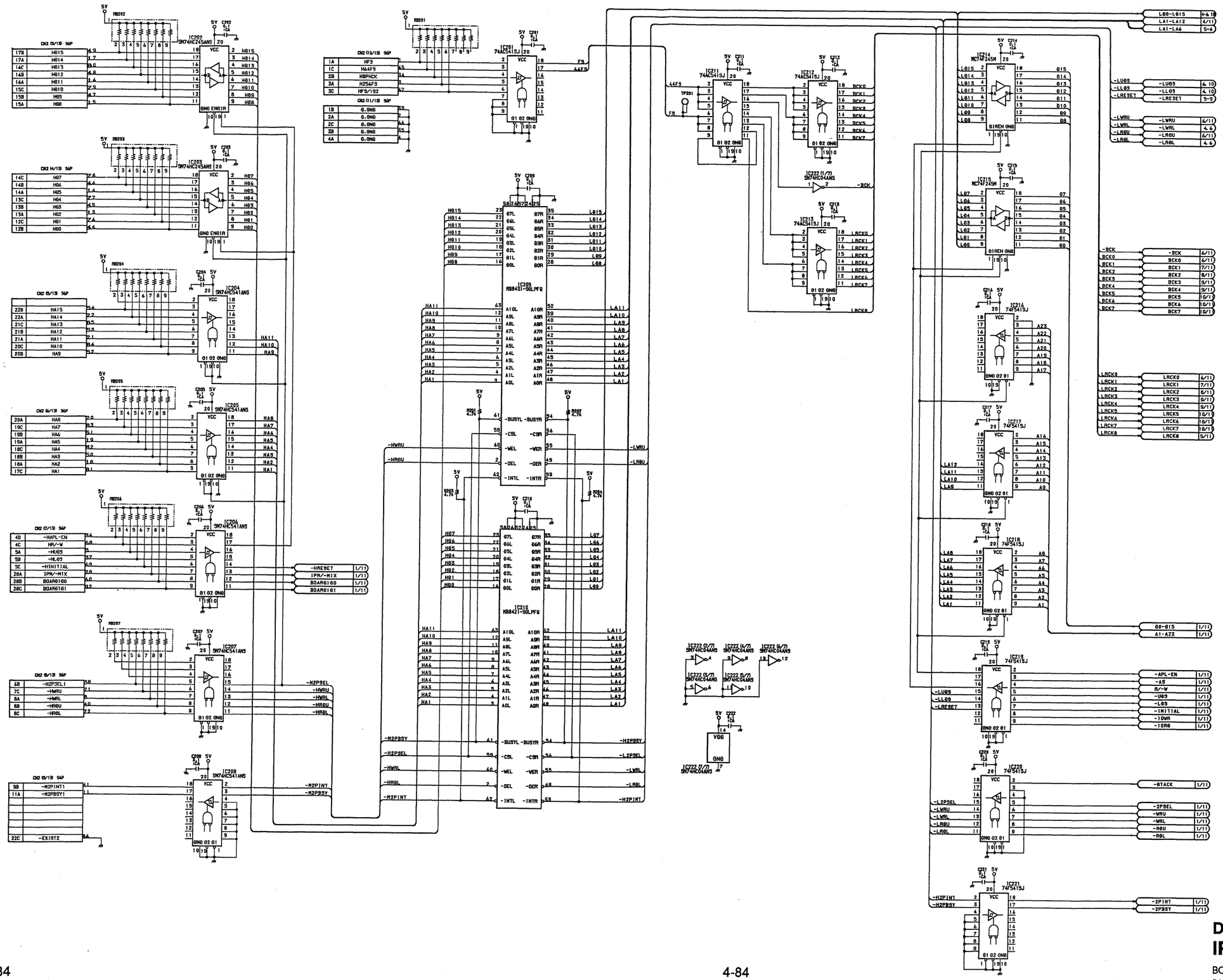

4-84

Digital Input Board
IPM-48 BOARD (3/11)

BOARD NO. 1-650-114-12
DMX-B4016, DMBK-4010

IPM-48 (4/11)
DMX-B4016 PROCESSOR, DMBK-4010 (OPTION)

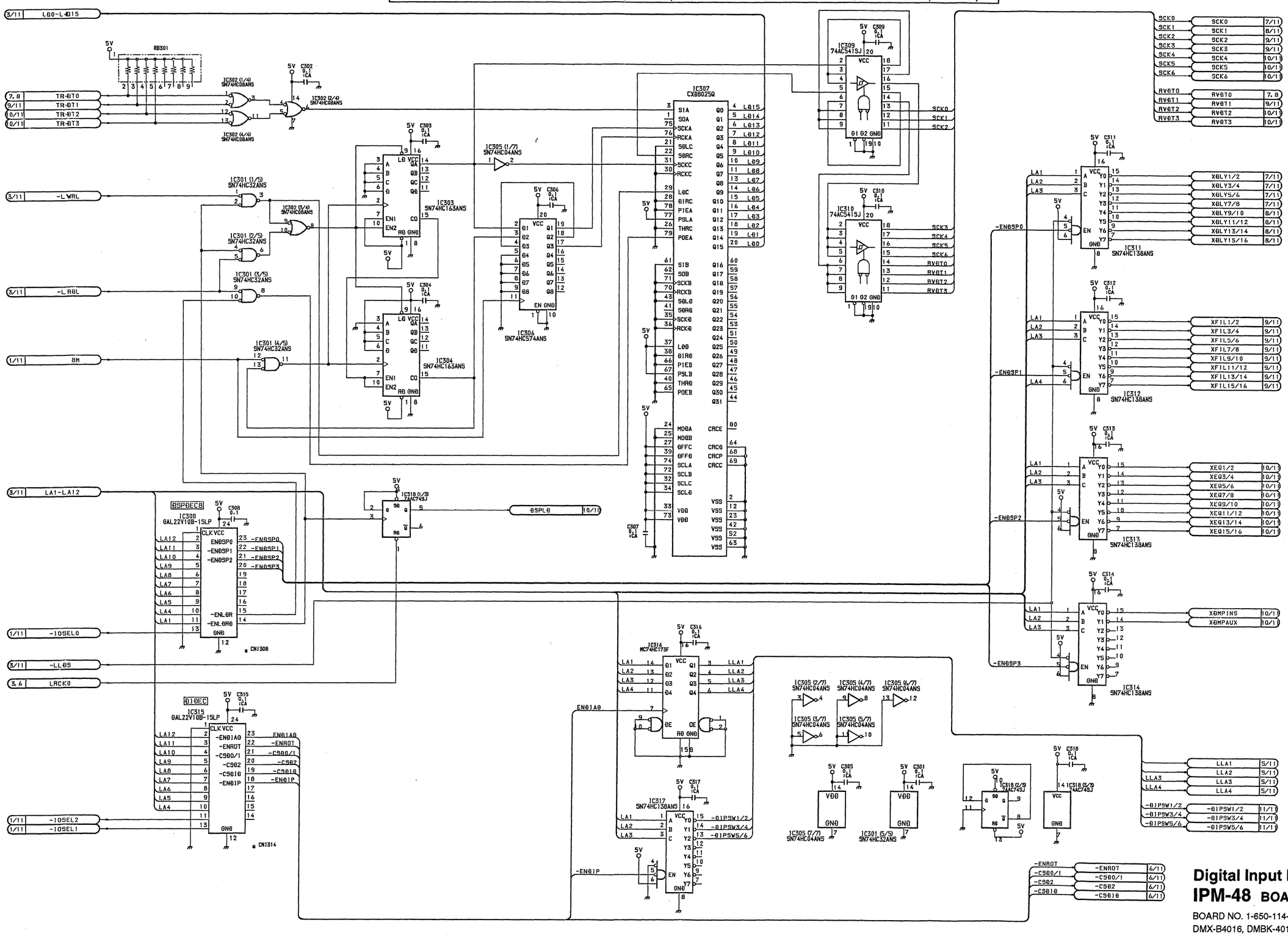

Digital Input Board
IPM-48 BOARD (4/11)

BOARD NO. 1-650-114-12
DMX-B4016, DMBK-4010

4-85

IPM-48 (5/11)
DMX-B4016 PROCESSOR, DMBK-4010 (OPTION)

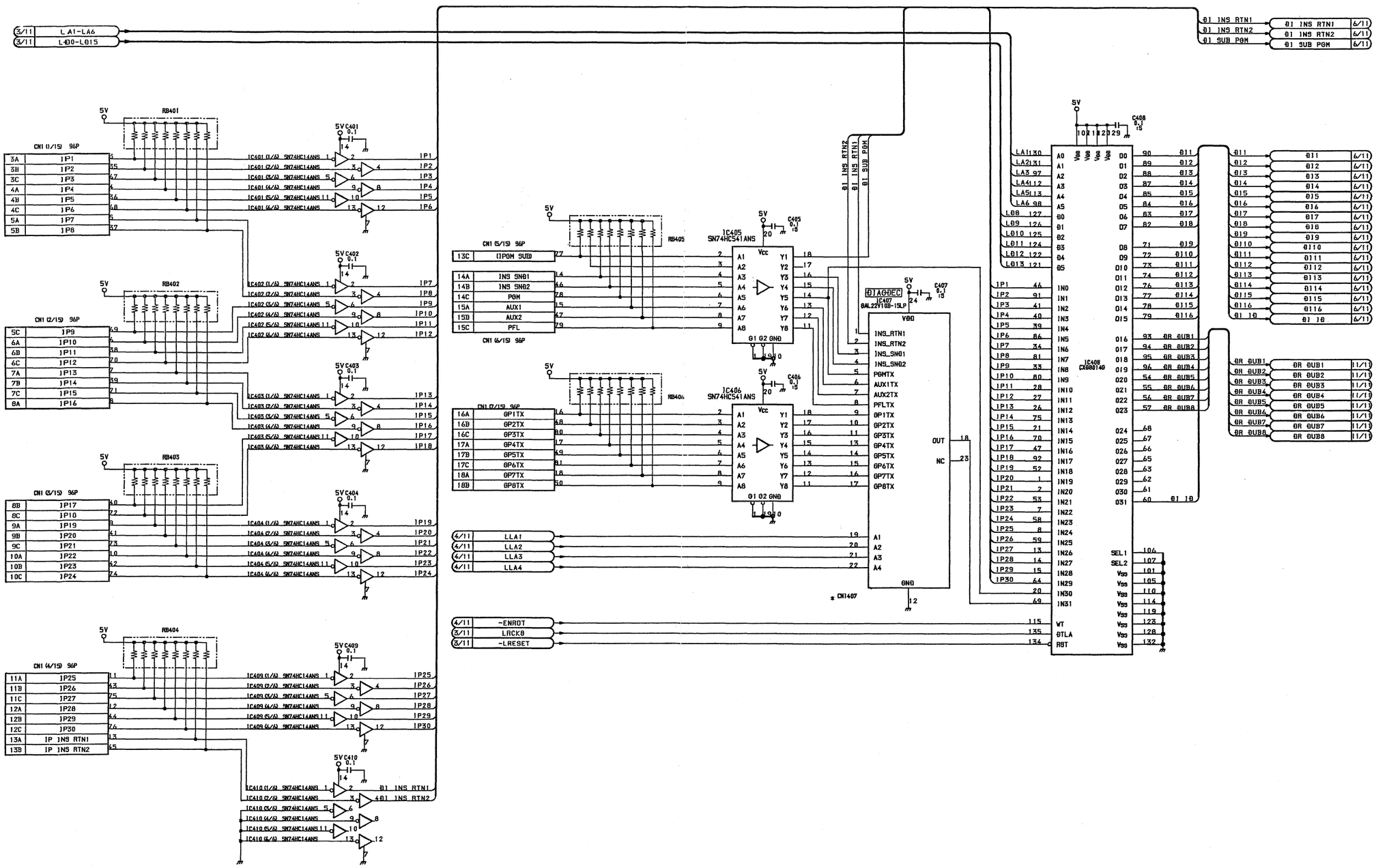

Digital Input Board
IPM-48 BOARD (5/11)

BOARD NO. 1-650-114-12
DMX-B4016, DMBK-4010

4-86

IPM-48 (6/11)
DMX-B4016 PROCESSOR, DMBK-4010 (OPTION)

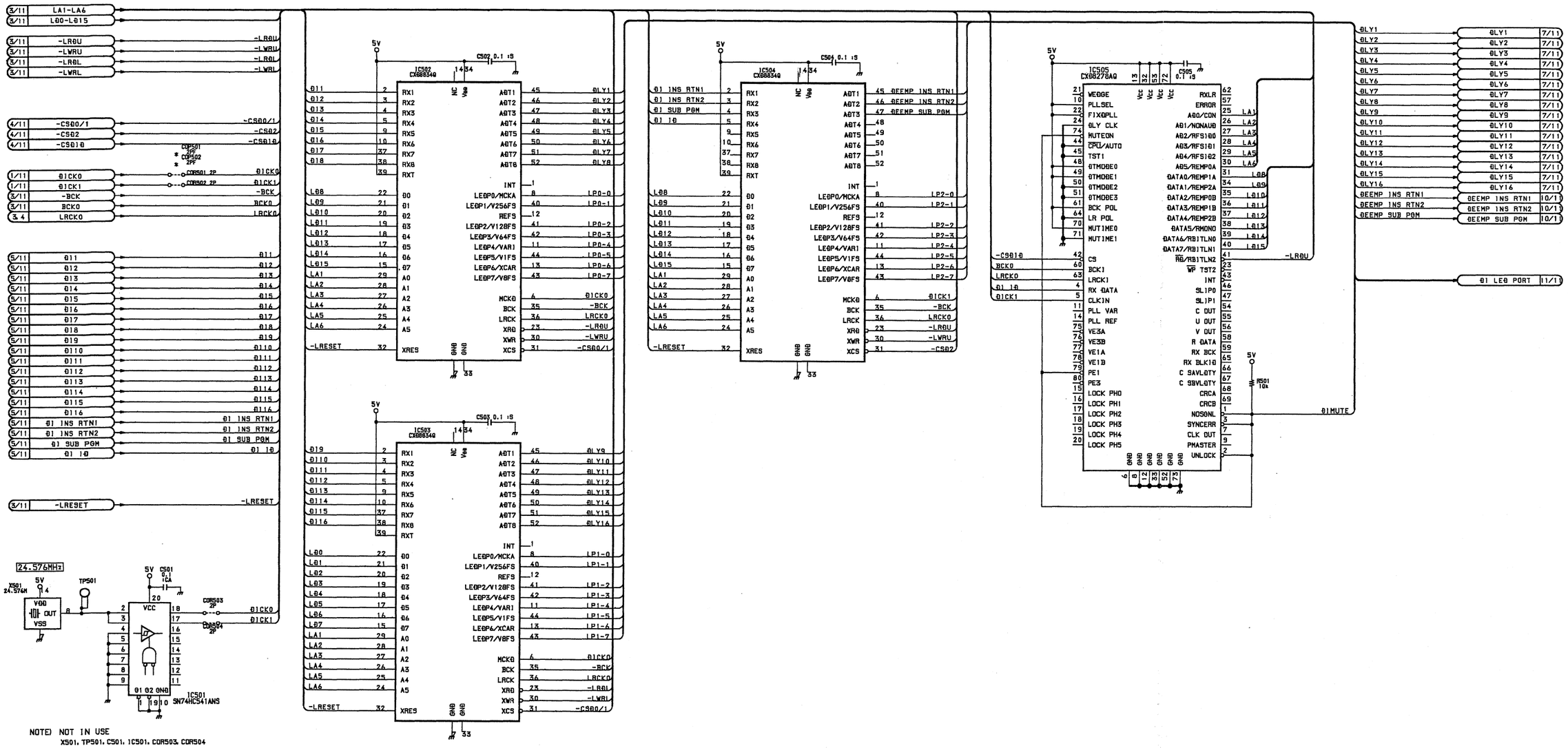

Digital Input Board
IPM-48 BOARD (6/11)

BOARD NO. 1-650-114-12
DMX-B4016, DMBK-4010

4-87

IPM-48 (7/11)
DMX-B4016 PROCESSOR, DMBK-4010 (OPTION)

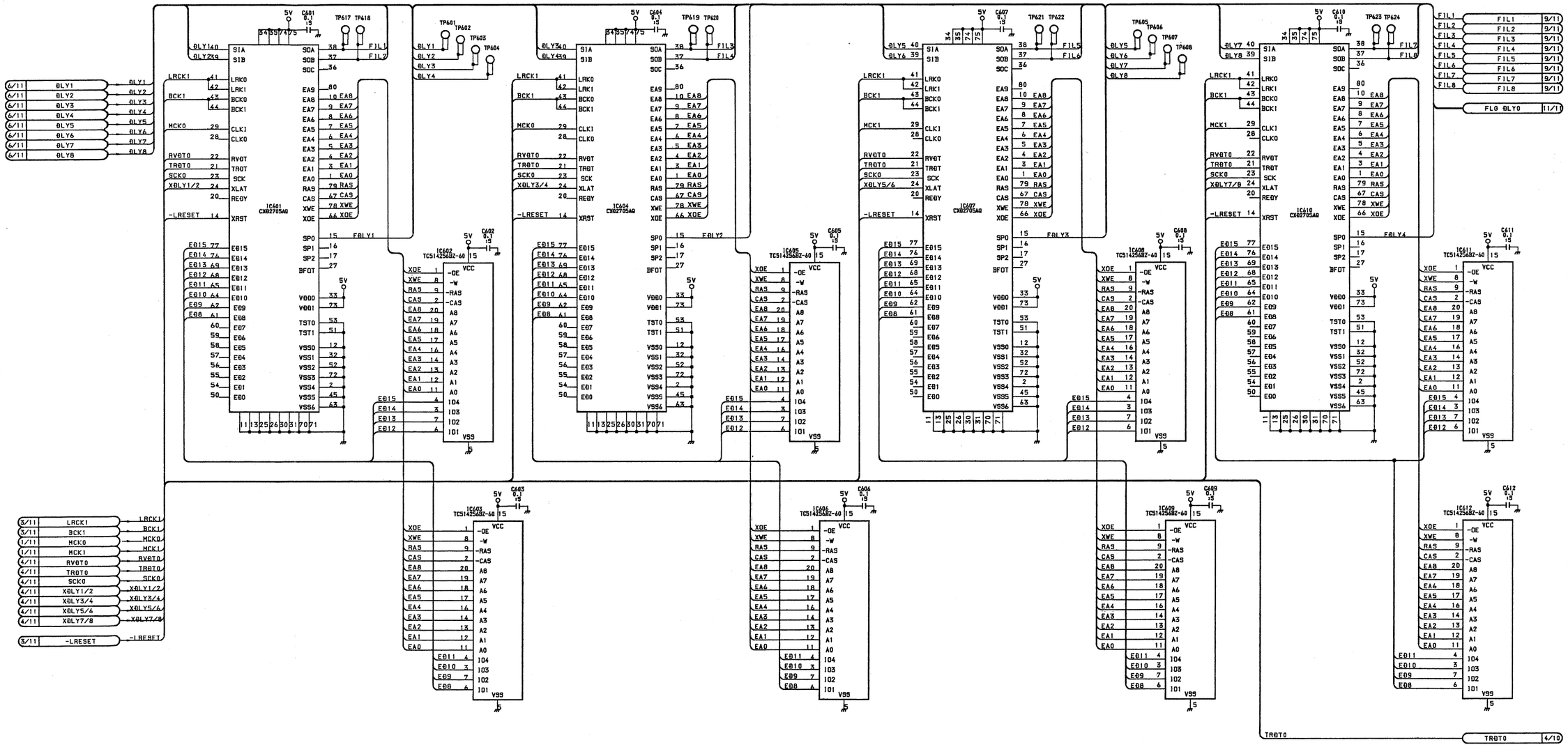

Digital Input Board
IPM-48 BOARD (7/11)

BOARD NO. 1-650-114-12
DMX-B4016, DMBK-4010

4-88

IPM-48 (8/11)
DMX-B4016 PROCESSOR, DMBK-4010 (OPTION)

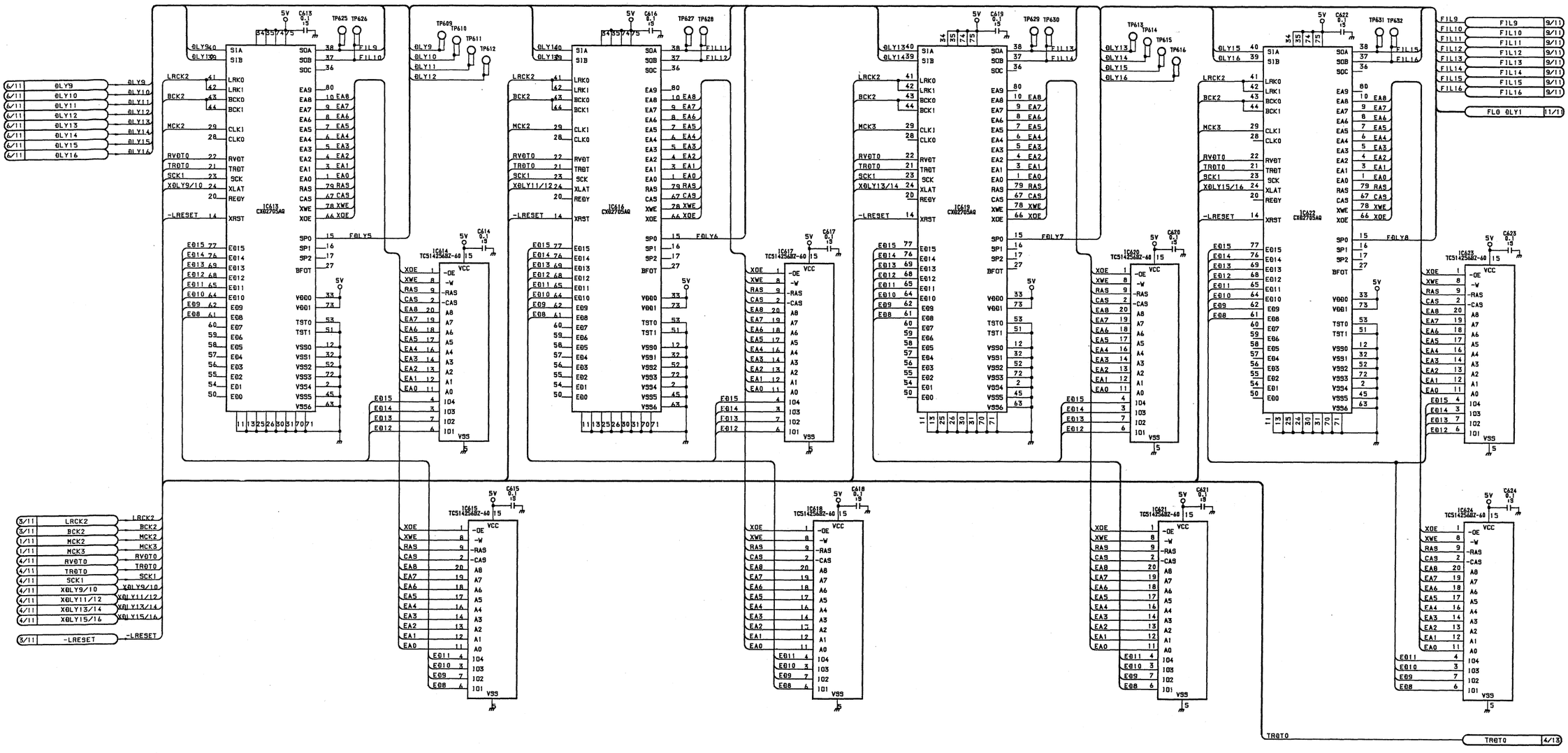

Digital Input Board
IPM-48 BOARD (8/11)

BOARD NO. 1-650-114-12
DMX-B4016, DMBK-4010

4-89

IPM-48 (9/11)
DMX-B4016 PROCESSOR, DMBK-4010 (OPTION)

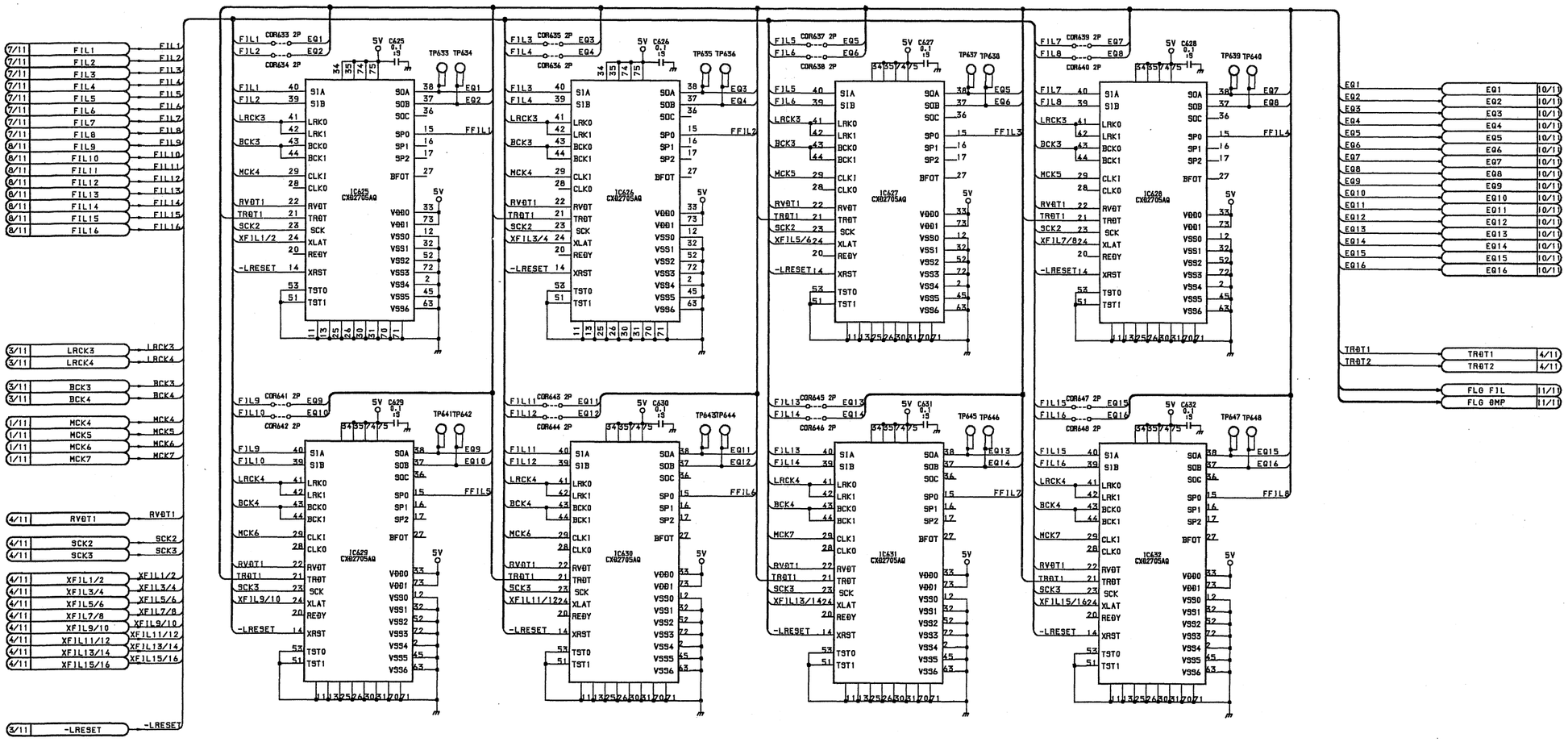

Digital Input Board
IPM-48 BOARD (9/11)

BOARD NO. 1-650-114-12
DMX-B4016, DMBK-4010

4-90

IPM-48 (10/11)
DMX-B4016 PROCESSOR, DMBK-4010 (OPTION)

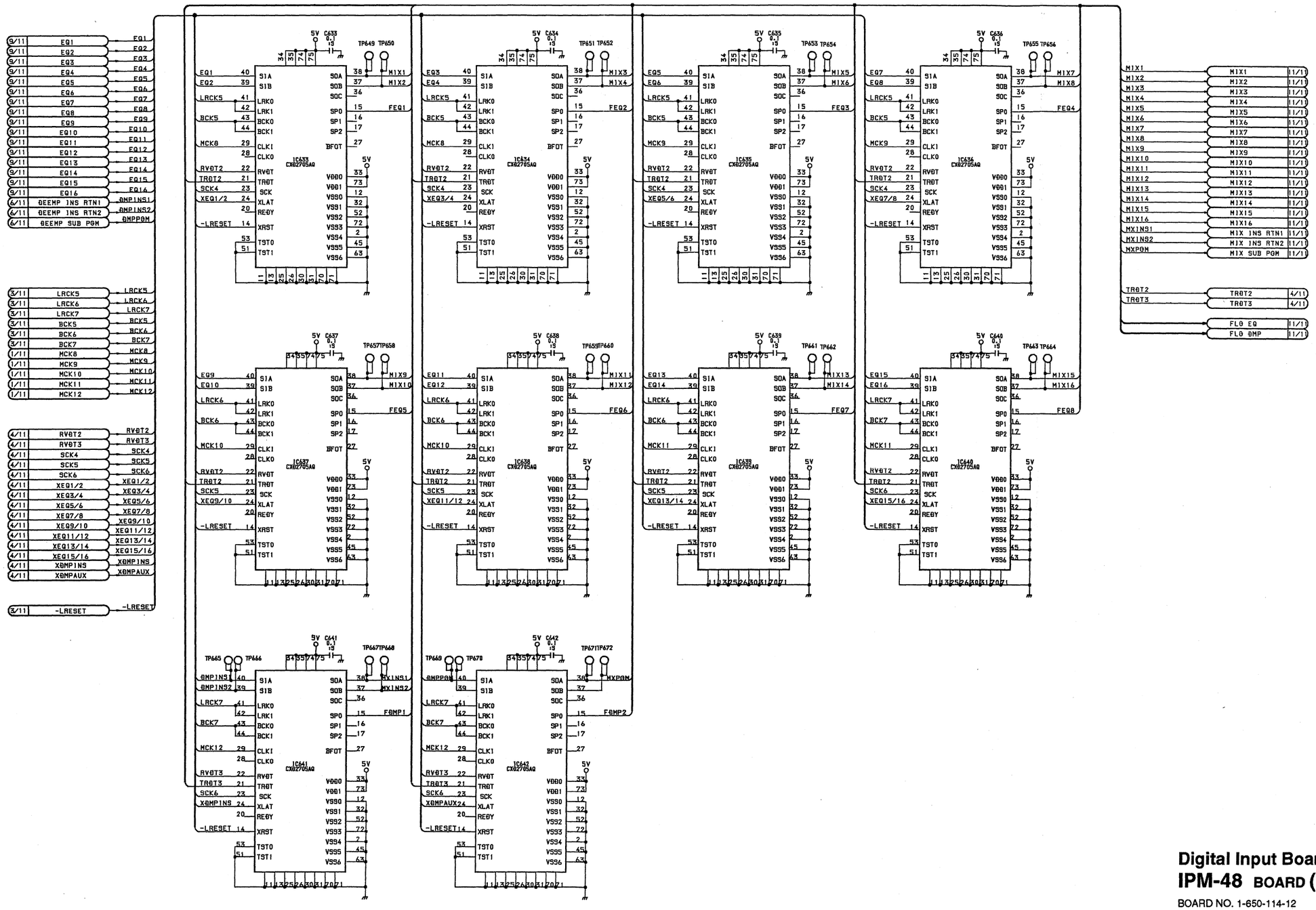

Digital Input Board
IPM-48 BOARD (10/11)

BOARD NO. 1-650-114-12
DMX-B4016, DMBK-4010

4-91

IPM-48 (11/11)
DMX-B4016 PROCESSOR, DMBK-4010 (OPTION)

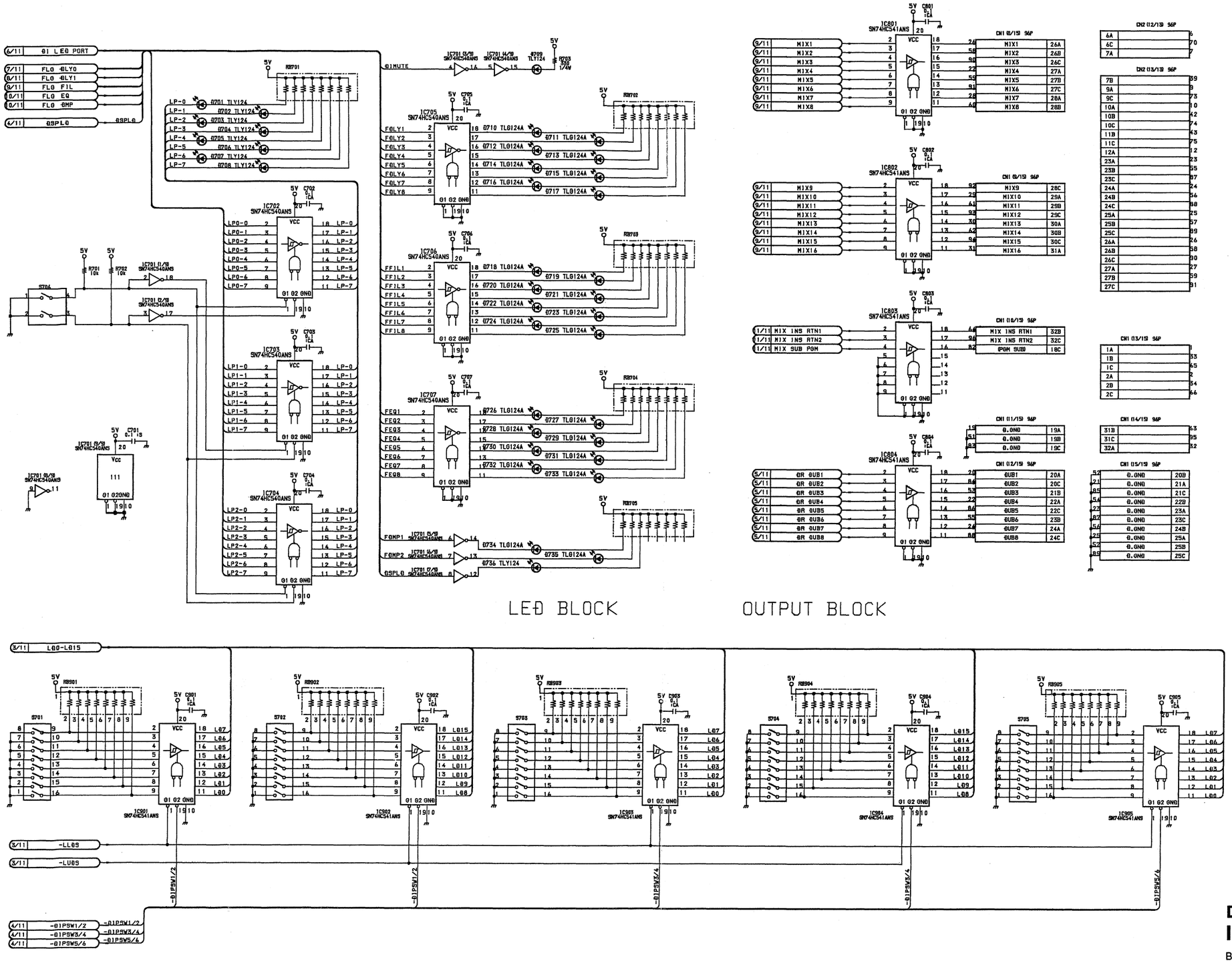

Digital Input Board
IPM-48 BOARD (11/11)

BOARD NO. 1-650-114-12
DMX-B4016, DMBK-4010

4-92

MIX-16 (1/13)
DMX-B4016 PROCESSOR, DMBK-4010/4011 (OPTION)

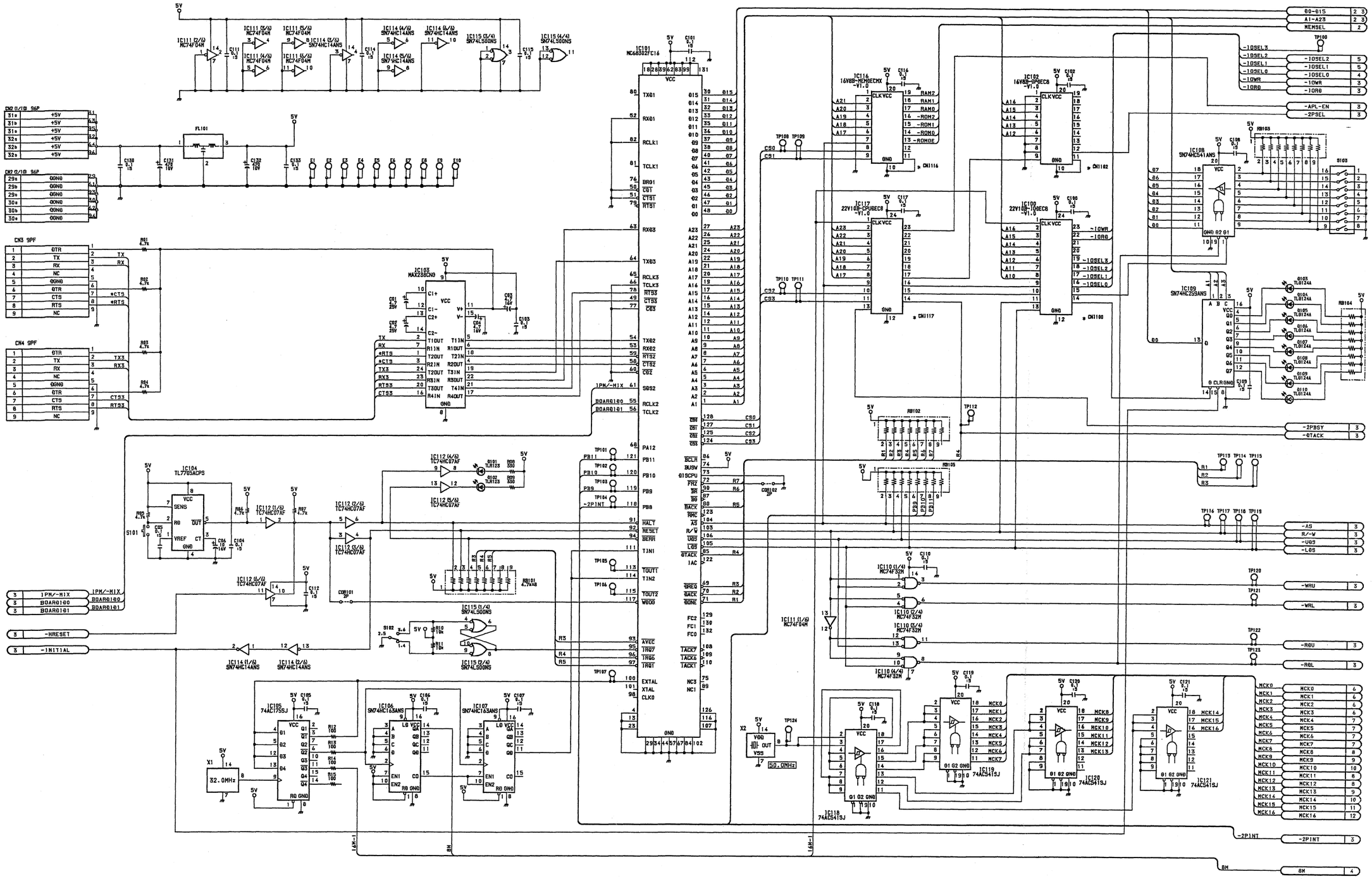

Mixing Board
MIX-16 BOARD (1/13)

BOARD NO. 1-650-115-11
DMX-B4016, DMBK-4010/4011

4-93

MIX-16 (2/13)
DMX-B4016 PROCESSOR, DMBK-4010/4011 (OPTION)

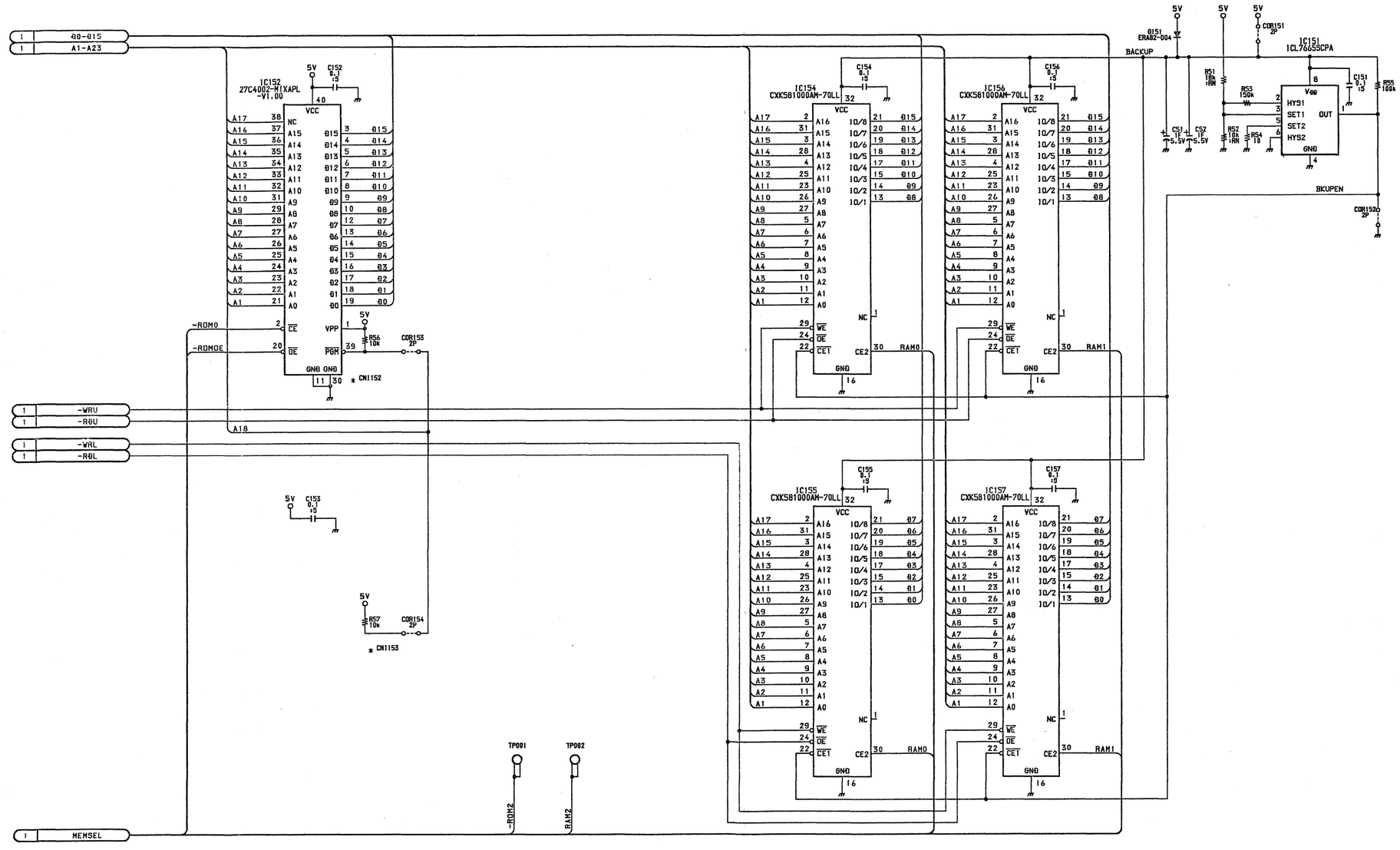

Mixing Board
MIX-16 BOARD (2/13)

BOARD NO. 1-650-115-11
DMX-B4016, DMBK-4010/4011

4-94

MIX-16 (3/13)
DMX-B4016 PROCESSOR, DMBK-4010/4011 (OPTION)

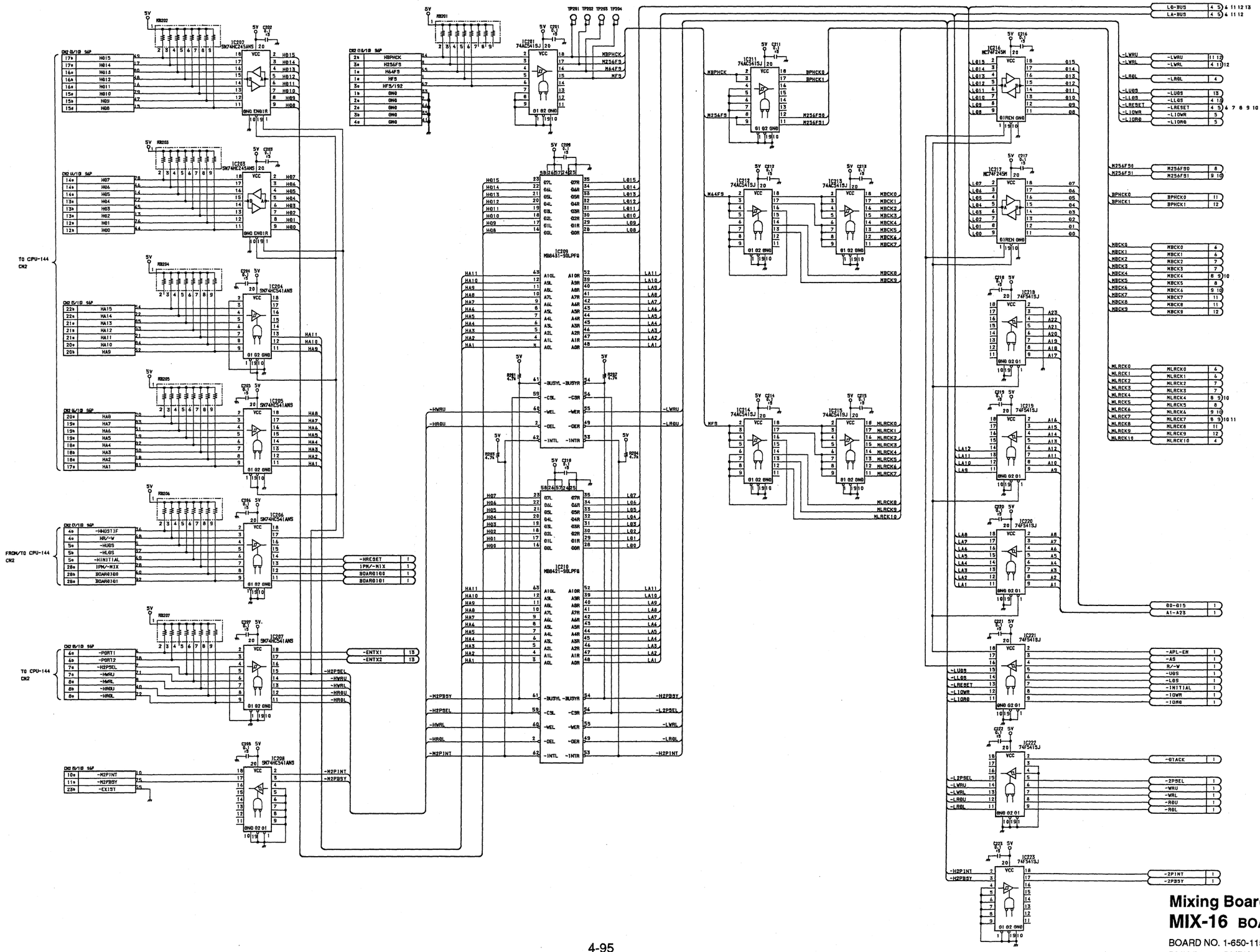

Mixing Board
MIX-16 BOARD (3/13)
BOARD NO. 1-650-115-11
DMX-B4016, DMBK-4010/4011

MIX-16 (4/13)
DMX-B4016 PROCESSOR, DMBK-4010/4011 (OPTION)

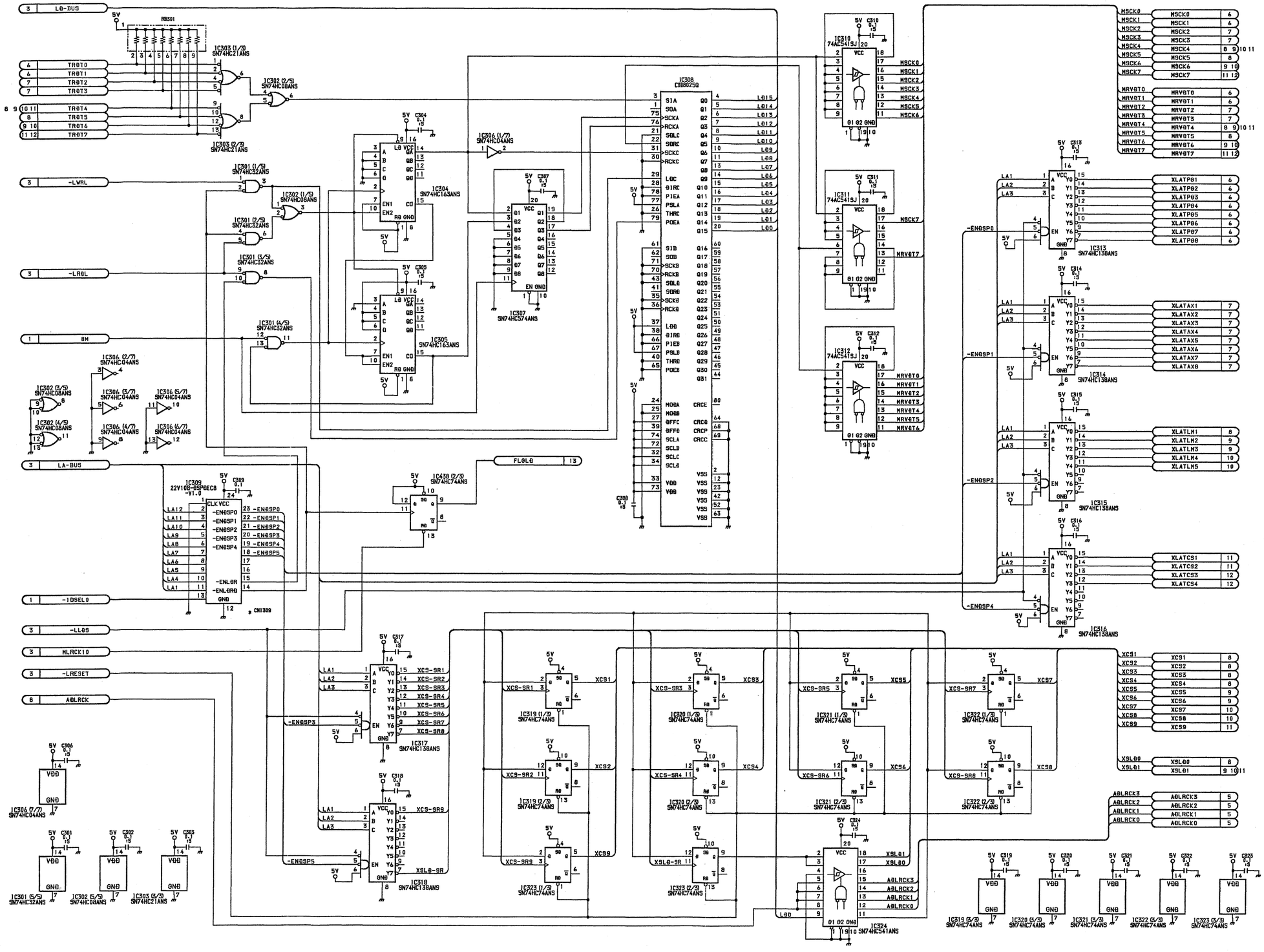

Mixing Board
MIX-16 BOARD (4/13)

BOARD NO. 1-650-115-11
DMX-B4016, DMBK-4010/4011

4-96

MIX-16 (5/13)
DMX-B4016 PROCESSOR, DMBK-4010/4011 (OPTION)

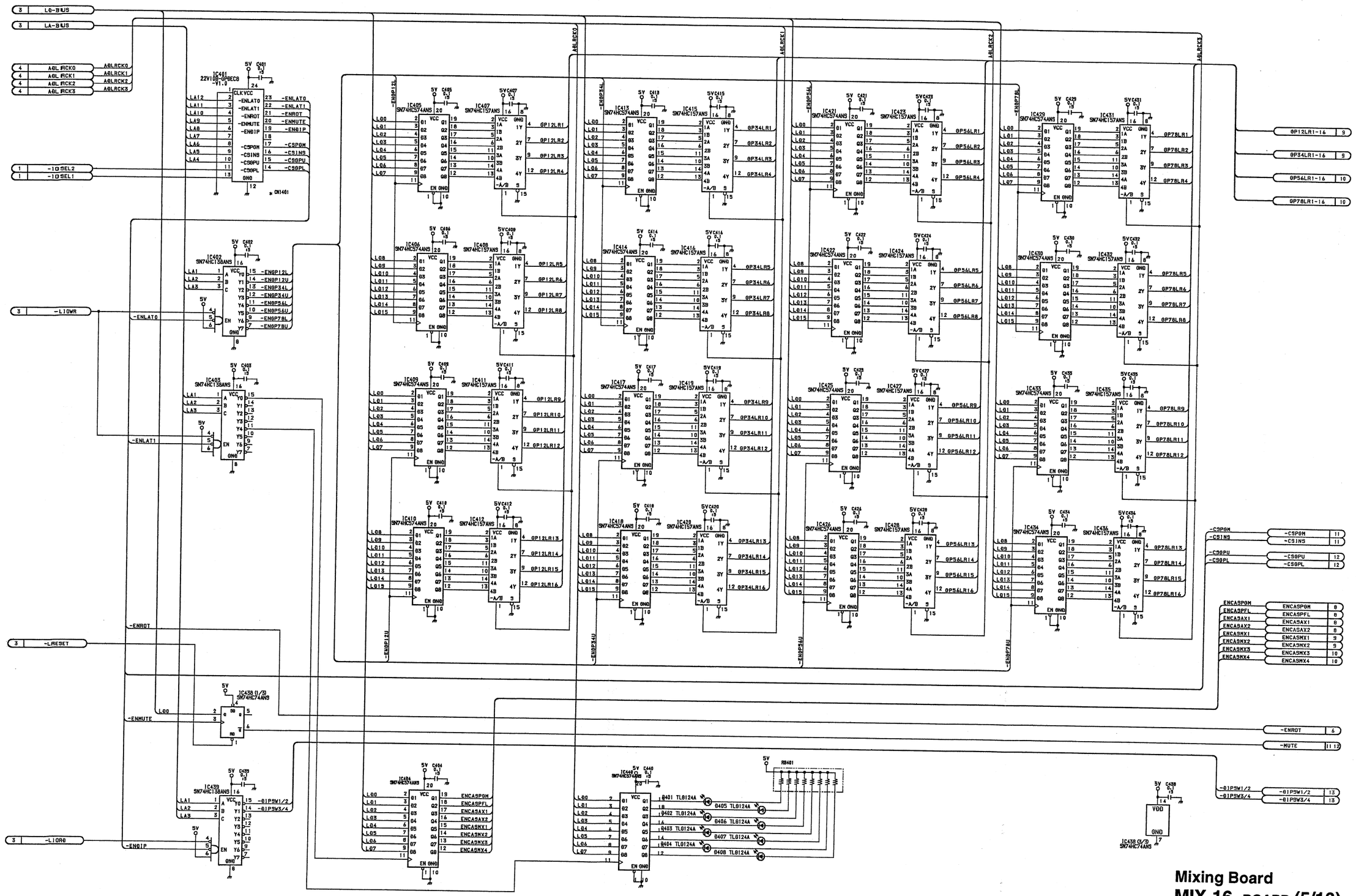

Mixing Board
MIX-16 BOARD (5/13)

BOARD NO. 1-650-115-11
DMX-B4016, DMBK-4010/4011

4-97

MIX-16 (6/13)
DMX-B4016 PROCESSOR, DMBK-4010/4011 (OPTION)

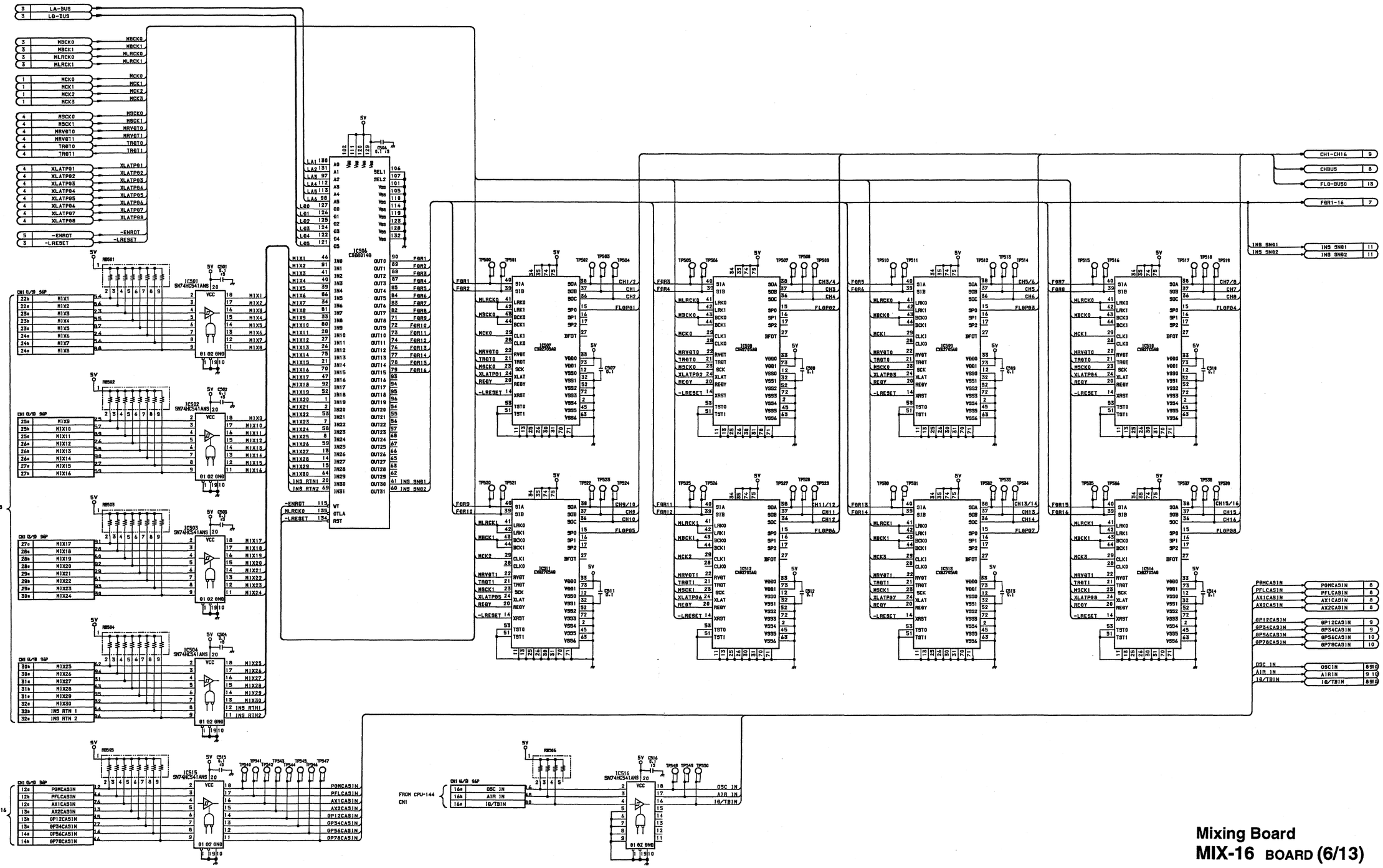

Mixing Board
MIX-16 BOARD (6/13)

BOARD NO. 1-650-115-11
DMX-B4016, DMBK-4010/4011

4-98

MIX-16 (7/13)
DMX-B4016 PROCESSOR, DMBK-4010/4011 (OPTION)

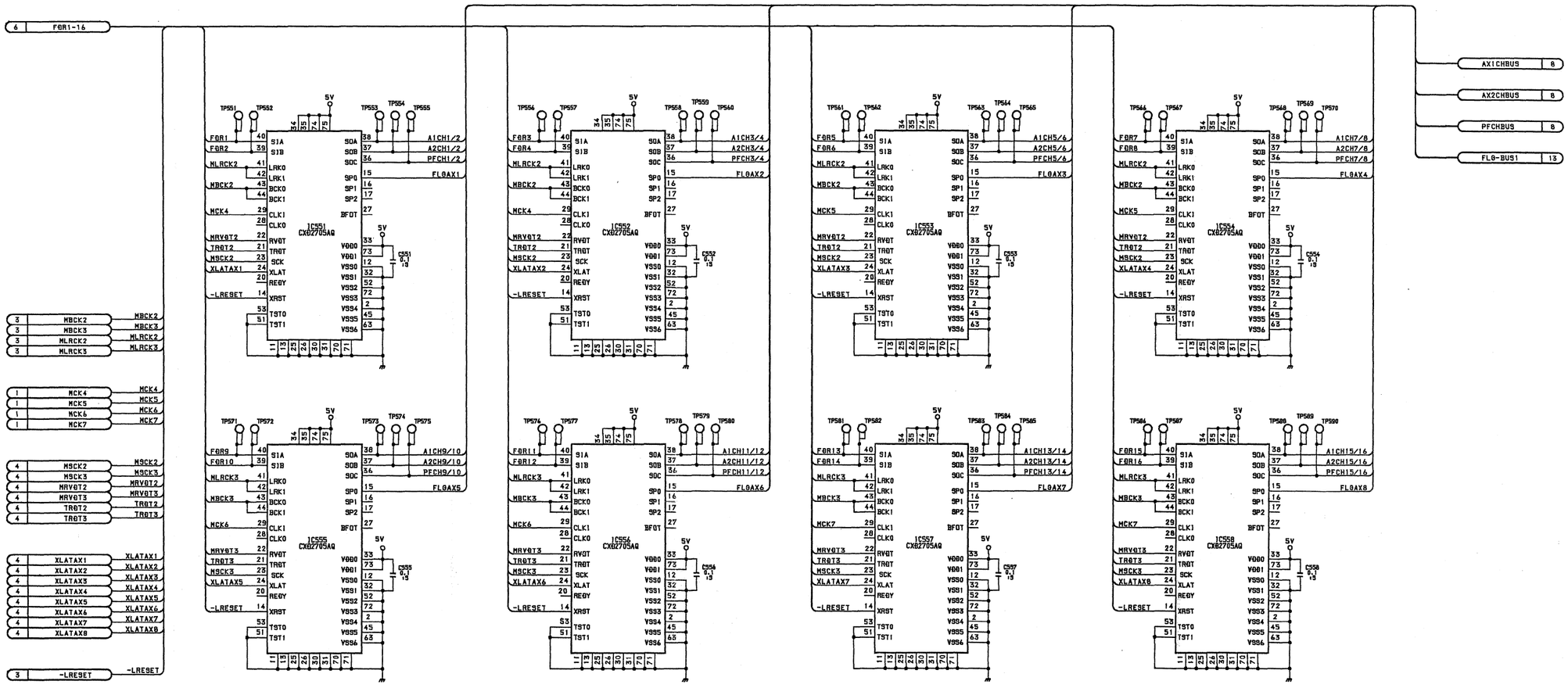

Mixing Board
MIX-16 BOARD (7/13)

BOARD NO. 1-650-115-11
DMX-B4016, DMBK-4010/4011

4-99

MIX-16 (8/13)
DMX-B4016 PROCESSOR, DMBK-4010/4011 (OPTION)

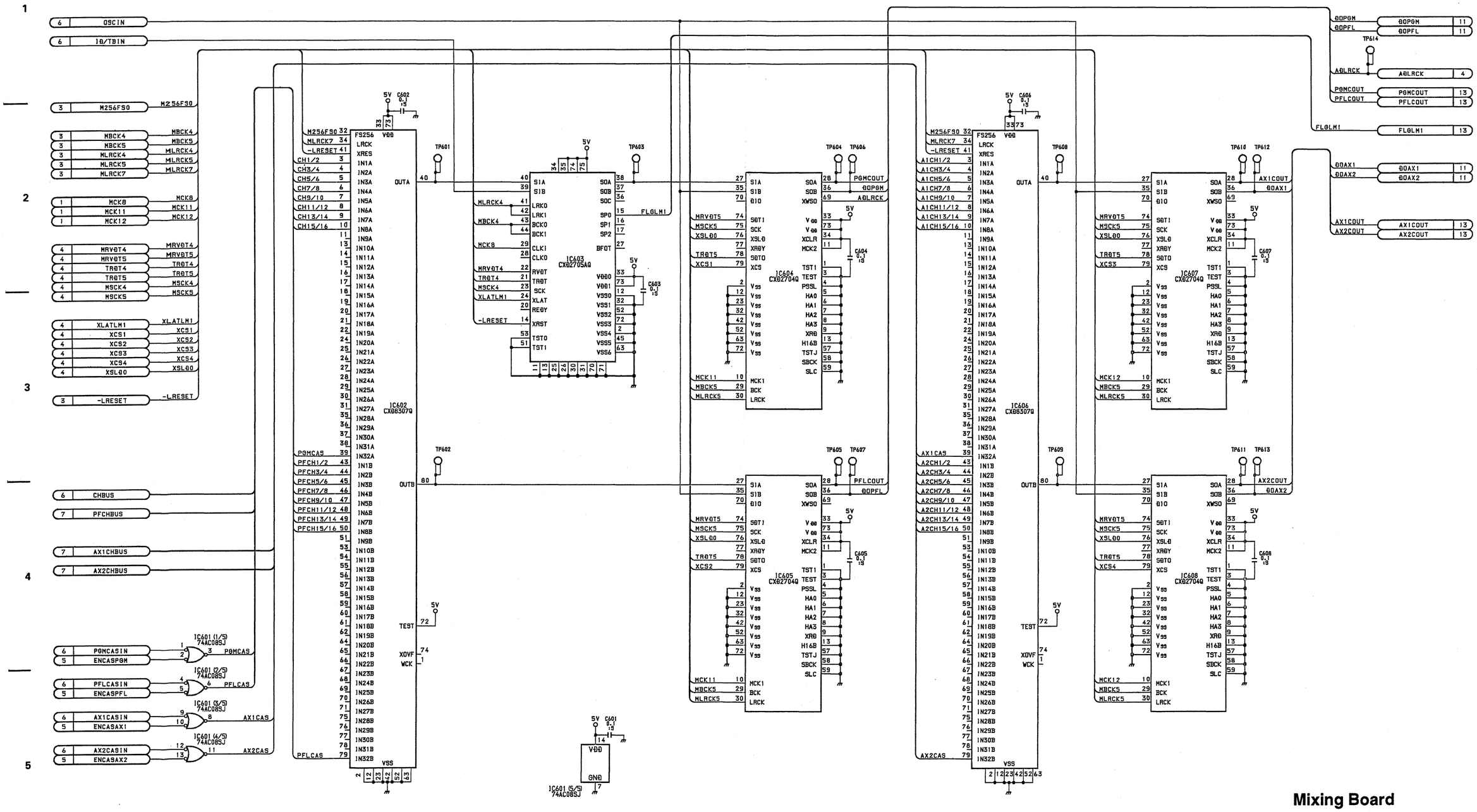

Mixing Board
MIX-16 BOARD (8/13)

BOARD NO. 1-650-115-11
DMX-B4016, DMBK-4010/4011

4-100

MIX-16 (9/13)
DMX-B4016 PROCESSOR, DMBK-4010/4011 (OPTION)

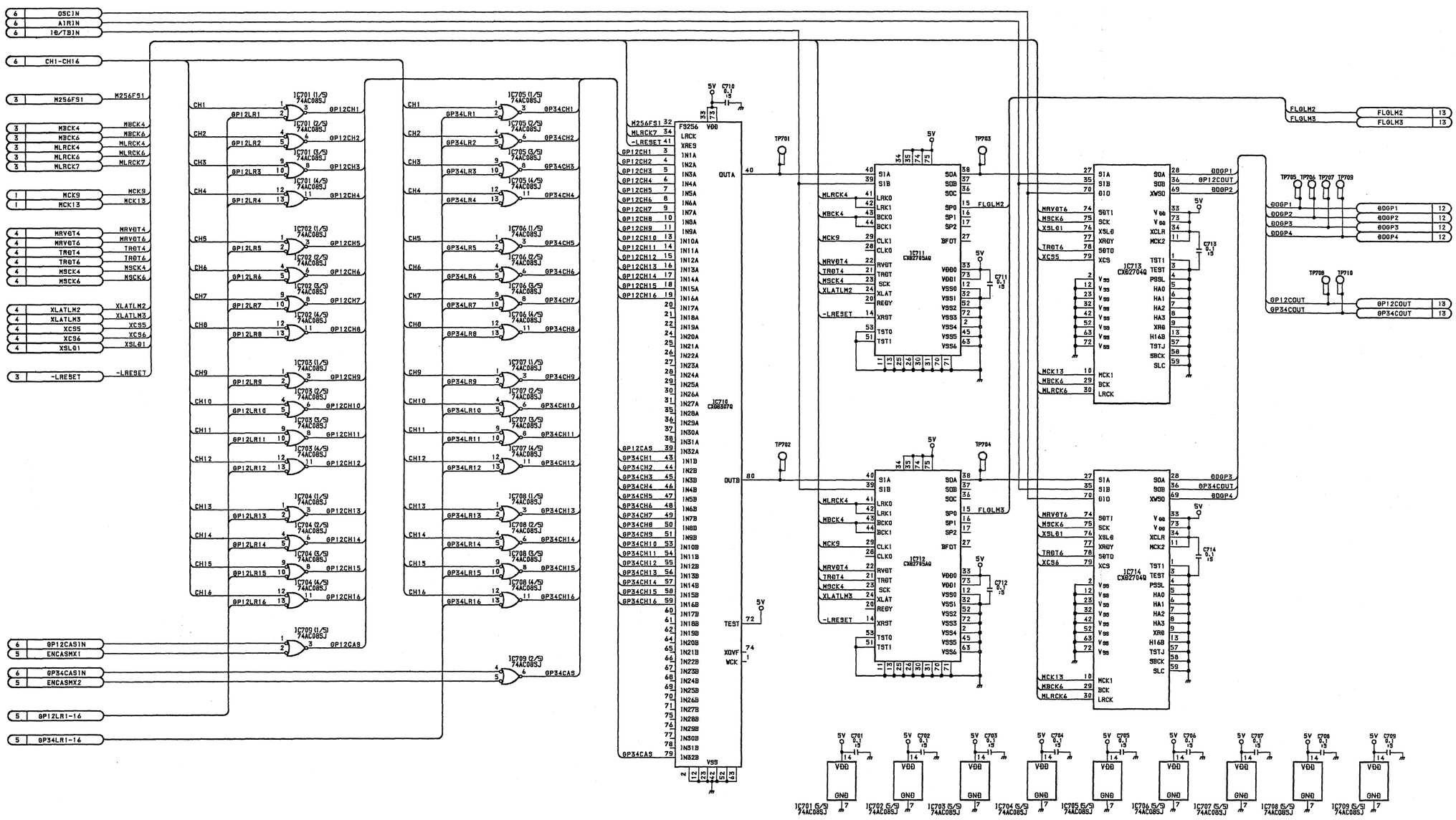

Mixing Board
MIX-16 BOARD (9/13)

BOARD NO. 1-650-115-11
DMX-B4016, DMBK-4010/4011

4-101

MIX-16 (10/13)
DMX-B4016 PROCESSOR, DMBK-4010/4011 (OPTION)

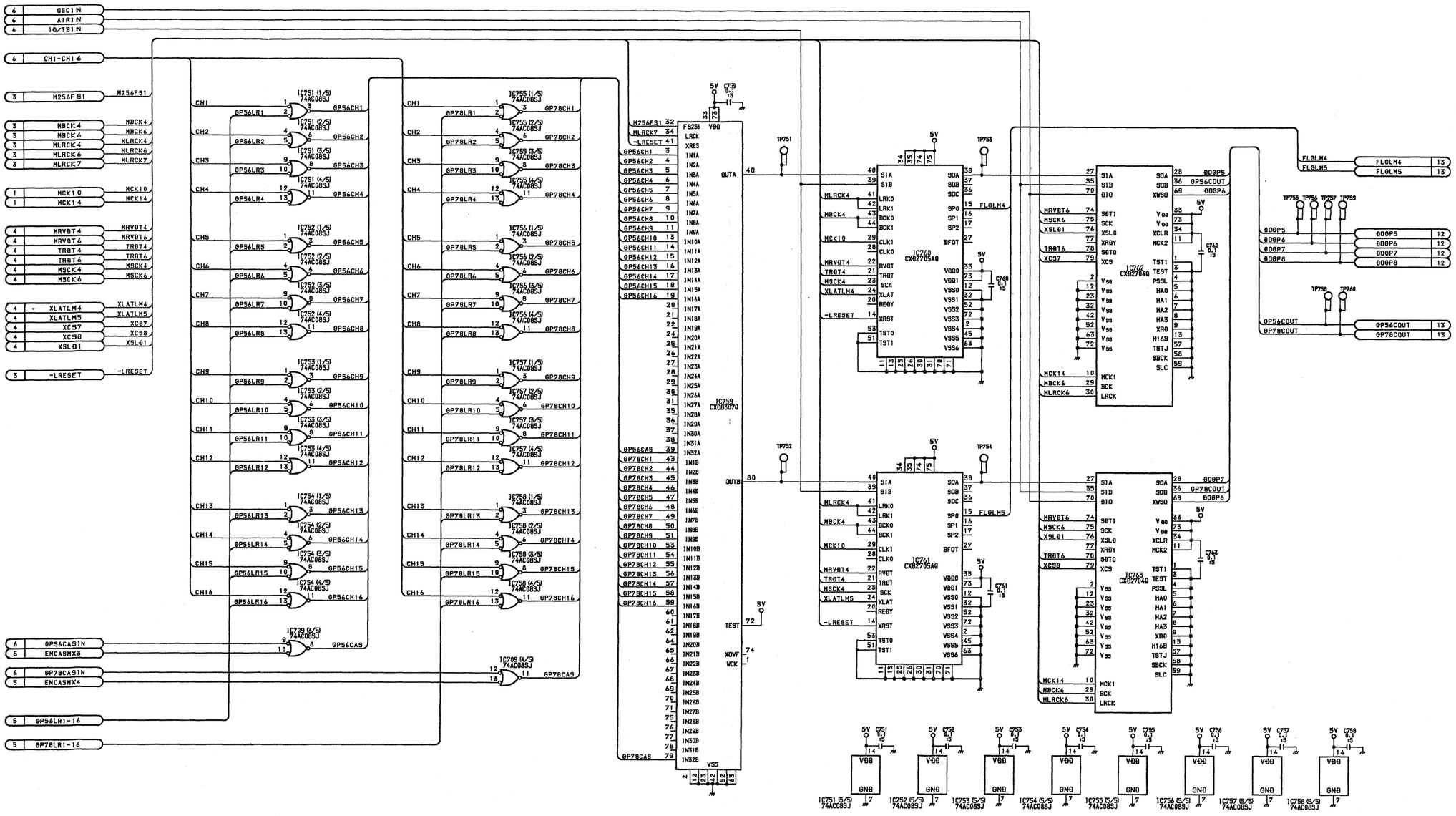

Mixing Board
MIX-16 BOARD (10/13)

BOARD NO. 1-650-115-11
DMX-B4016, DMBK-4010/4011

4-102

MIX-16 (11/13)
DMX-B4016 PROCESSOR, DMBK-4010/4011 (OPTION)

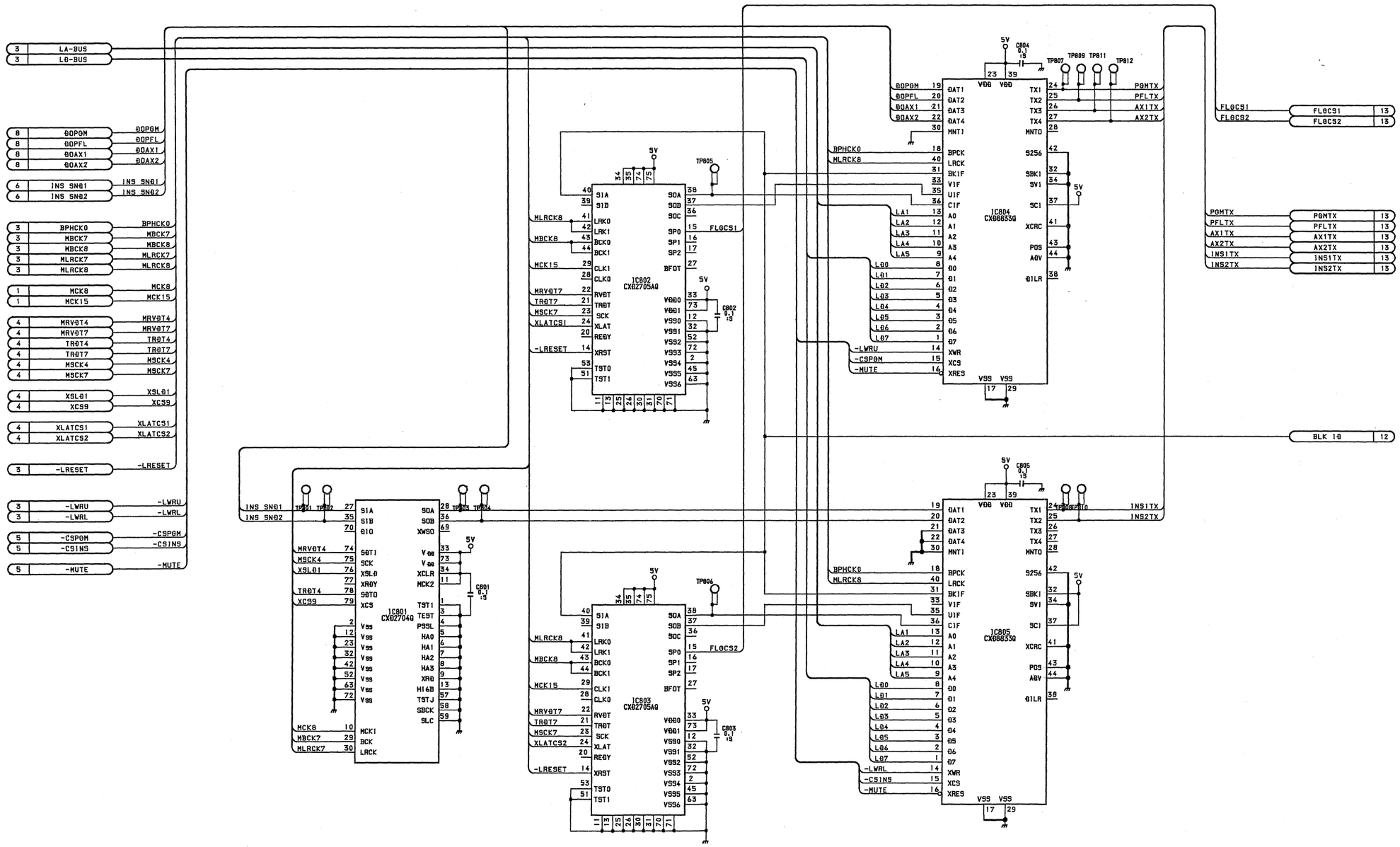

Mixing Board
MIX-16 BOARD (11/13)

BOARD NO. 1-650-115-11
DMX-B4016, DMBK-4010/4011

4-103

MIX-16 (12/13)
DMX-B4016 PROCESSOR, DMBK-4010/4011 (OPTION)

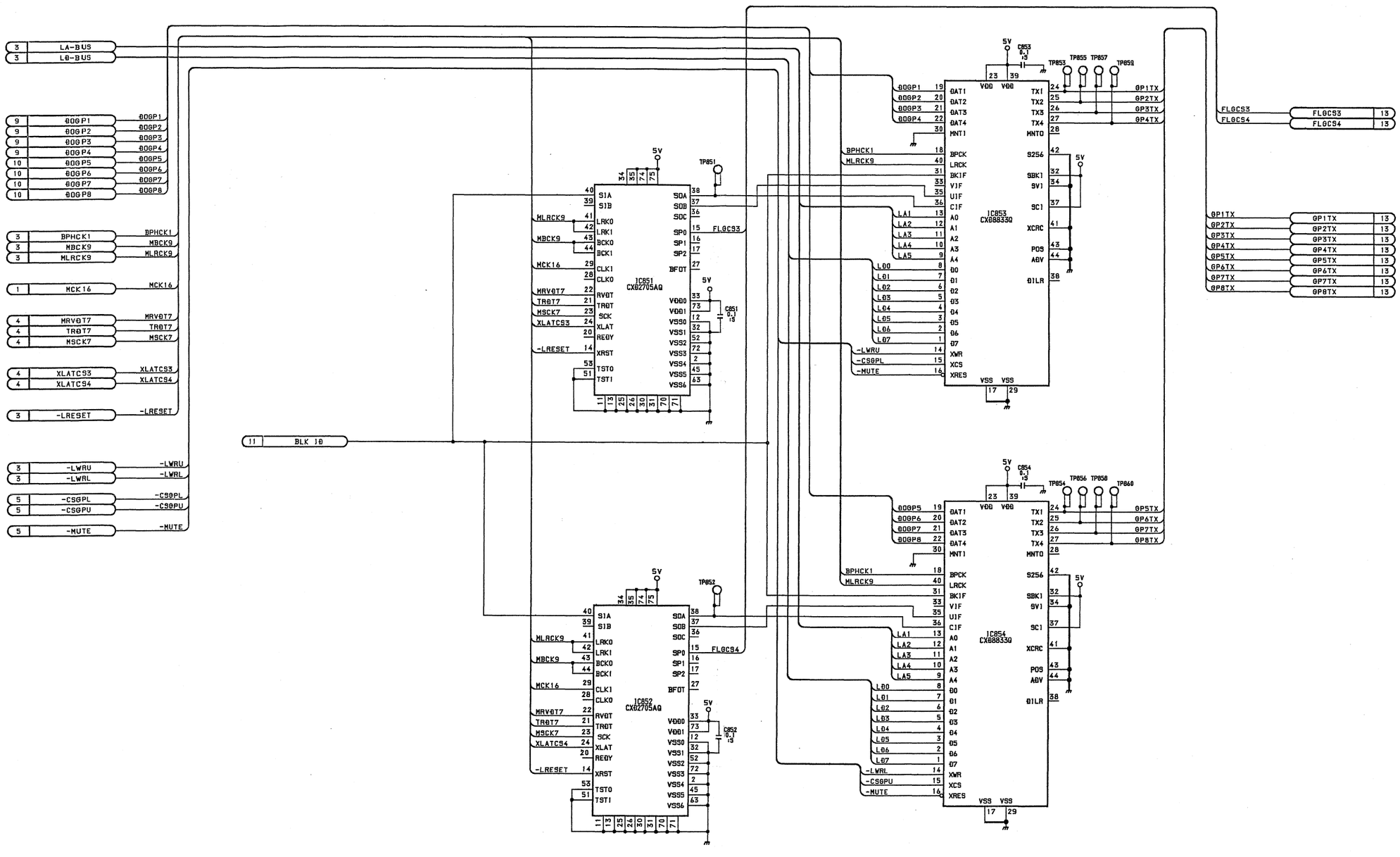

Mixing Board
MIX-16 BOARD (12/13)

BOARD NO. 1-650-115-11
DMX-B4016, DMBK-4010/4011

4-104

MIX-16 (13/13)
DMX-B4016 PROCESSOR, DMBK-4010/4011 (OPTION)

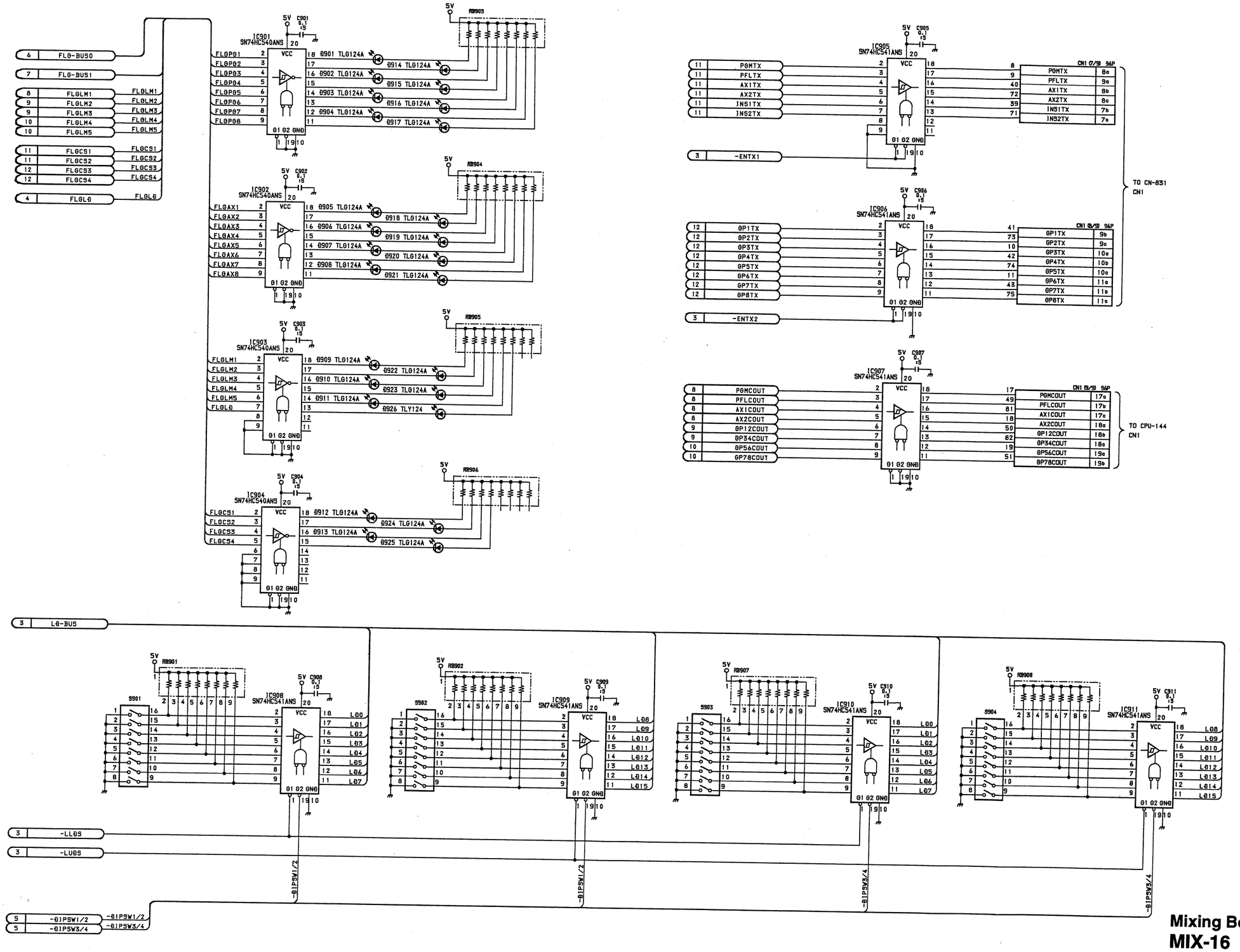

Mixing Board
MIX-16 BOARD (13/13)

BOARD NO. 1-650-115-11
DMX-B4016, DMBK-4010/4011

4-105

MB-480 (1/3)
DMX-B4016 PROCESSOR

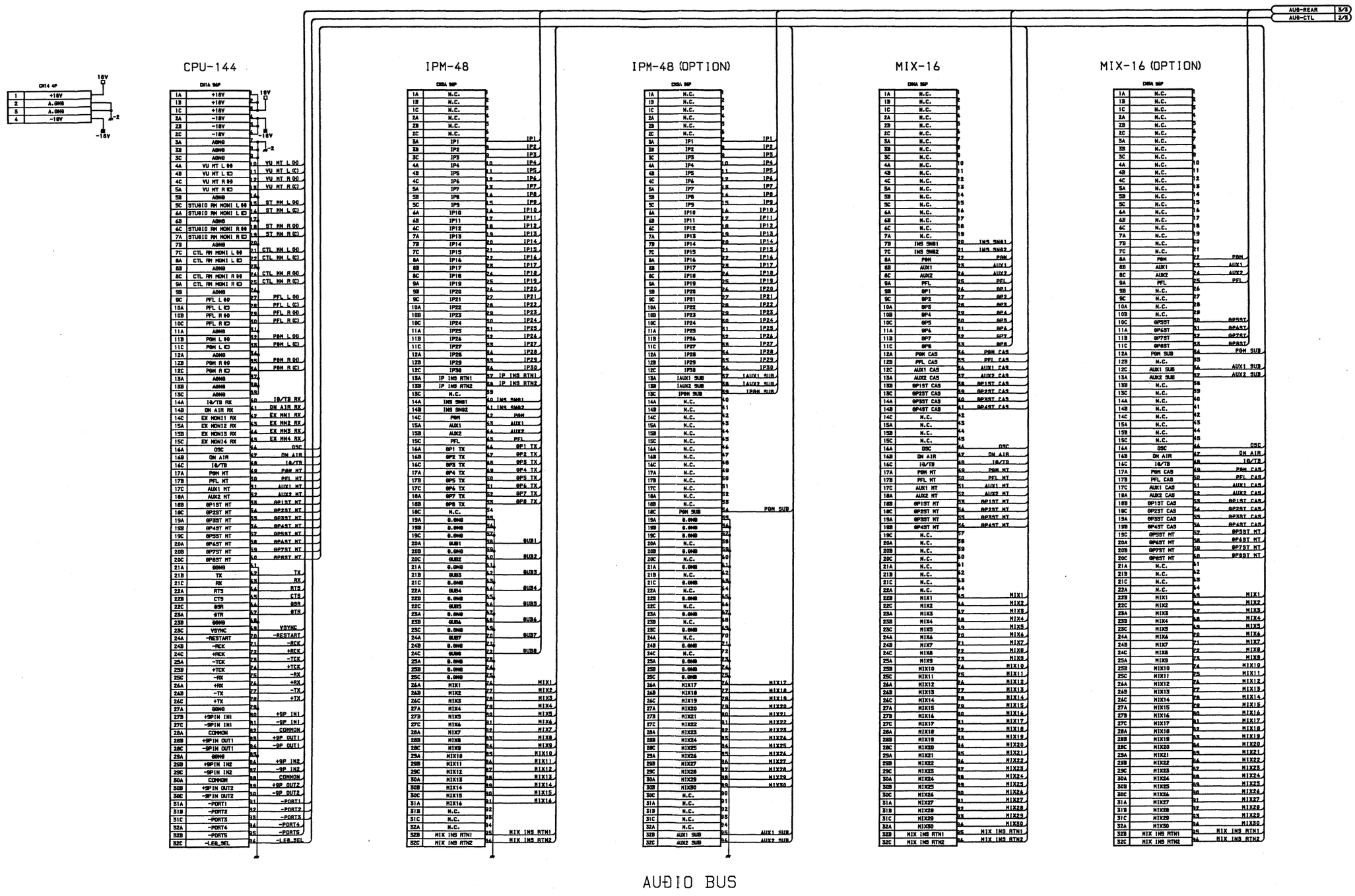

Processor Rack Mother Board
MB-480 BOARD (1/3)

BOARD NO. 1-650-112-11
DMX-B4016

4-106

MB-480 (2/3)
DMX-B4016 PROCESSOR

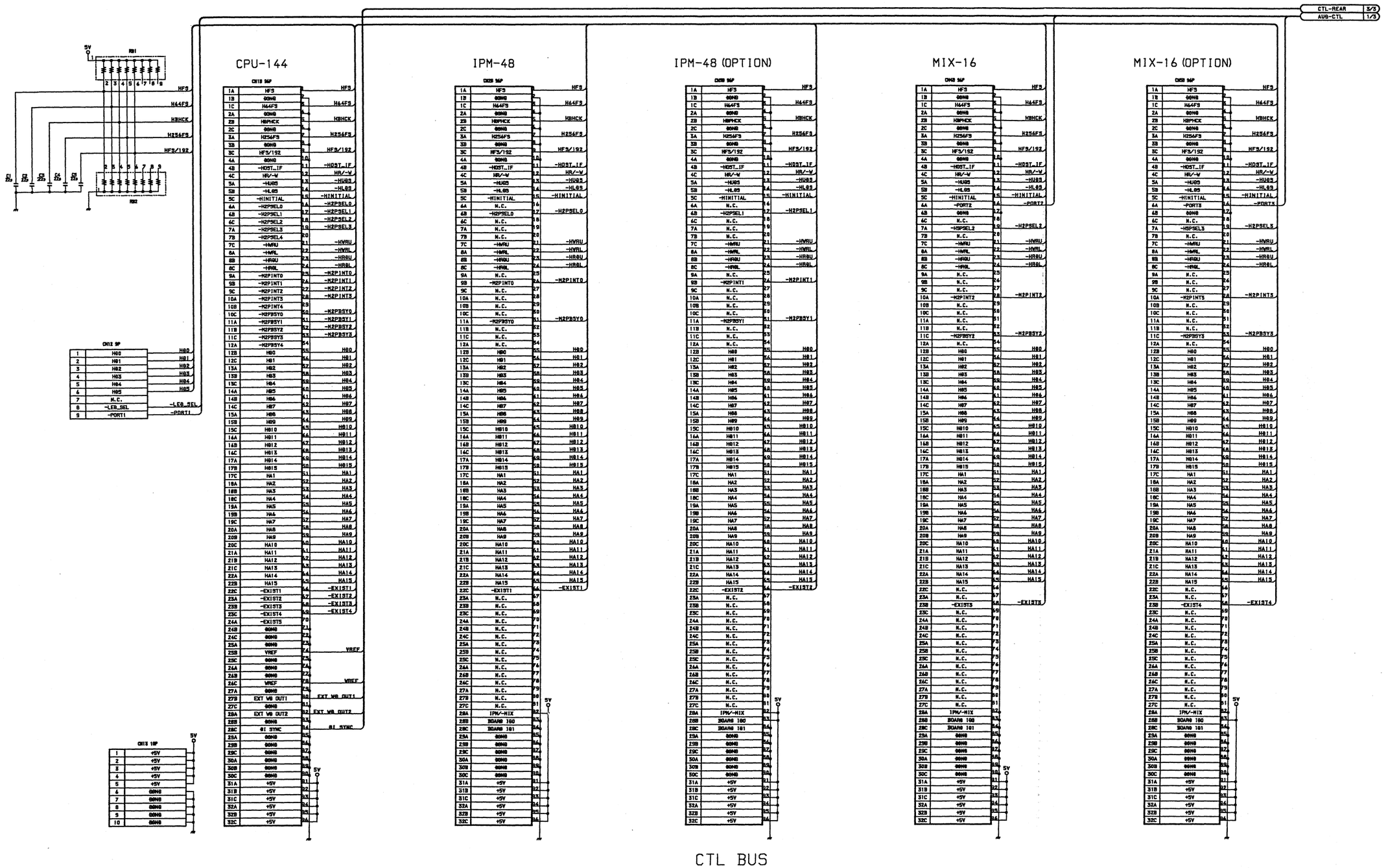

Processor Rack Mother Board
MB-480 BOARD (2/3)

BOARD NO. 1-650-112-11
DMX-B4016

4-107

MB-480 (3/3)
DMX-B4016 PROCESSOR

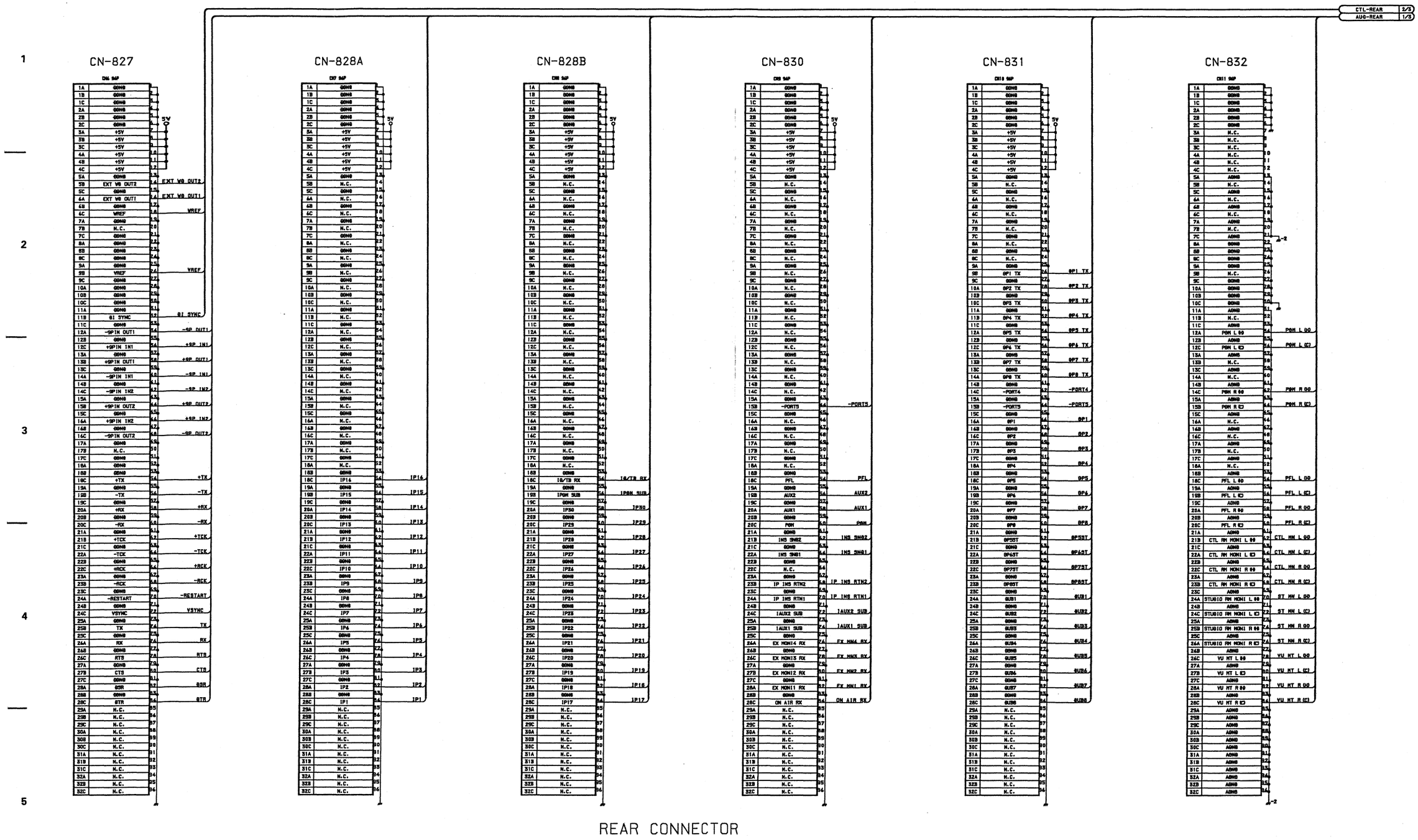

Processor Rack Mother Board
MB-480 BOARD (3/3)
BOARD NO. 1-650-112-11
DMX-B4016

4-108

CN-827
DMX-B4016 PROCESSOR

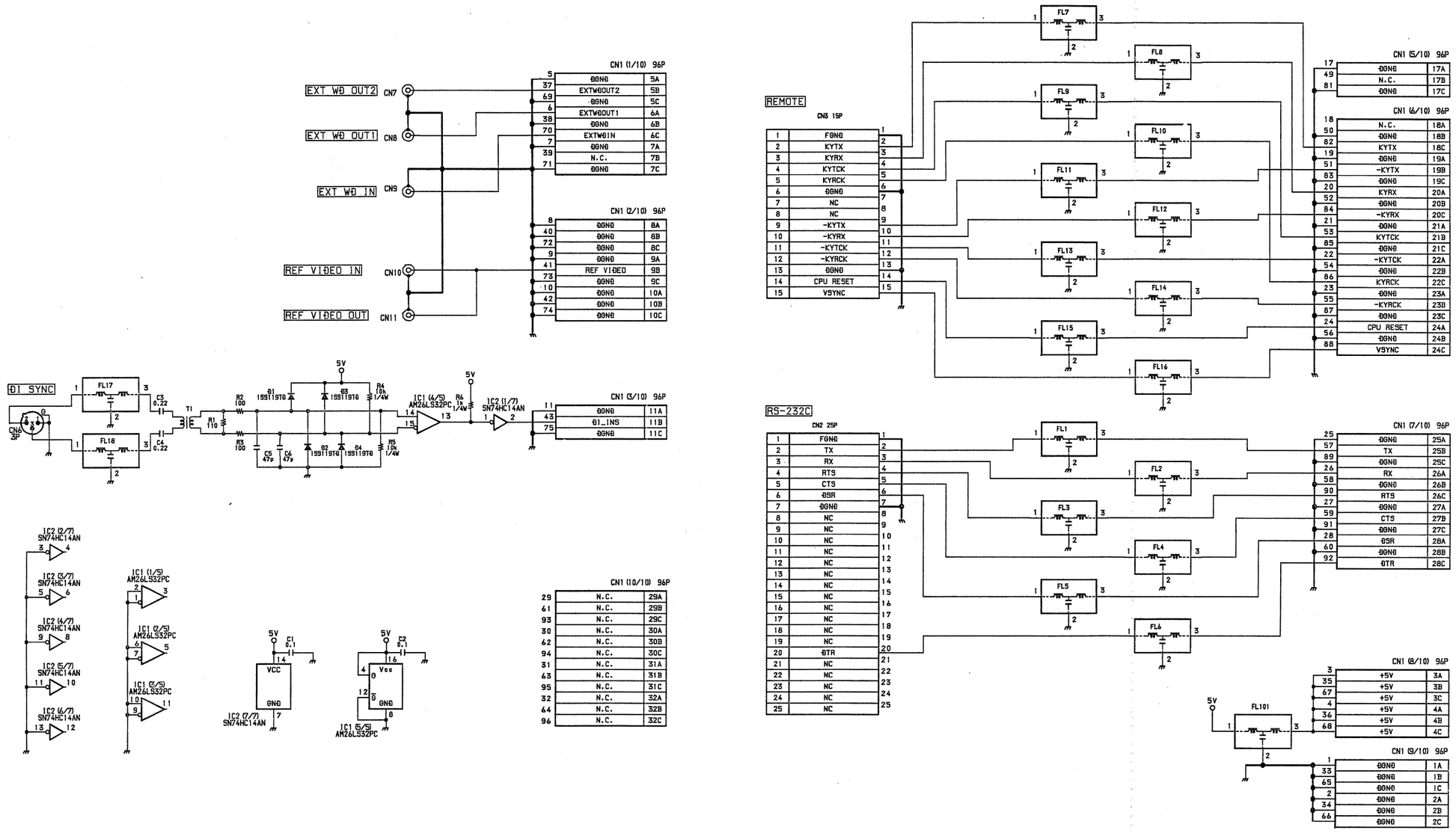

Connector Board
CN-827 BOARD

BOARD NO. 1-650-116-11
DMX-B4016

4-109

CN-828A/828B
DMX-B4016 PROCESSOR

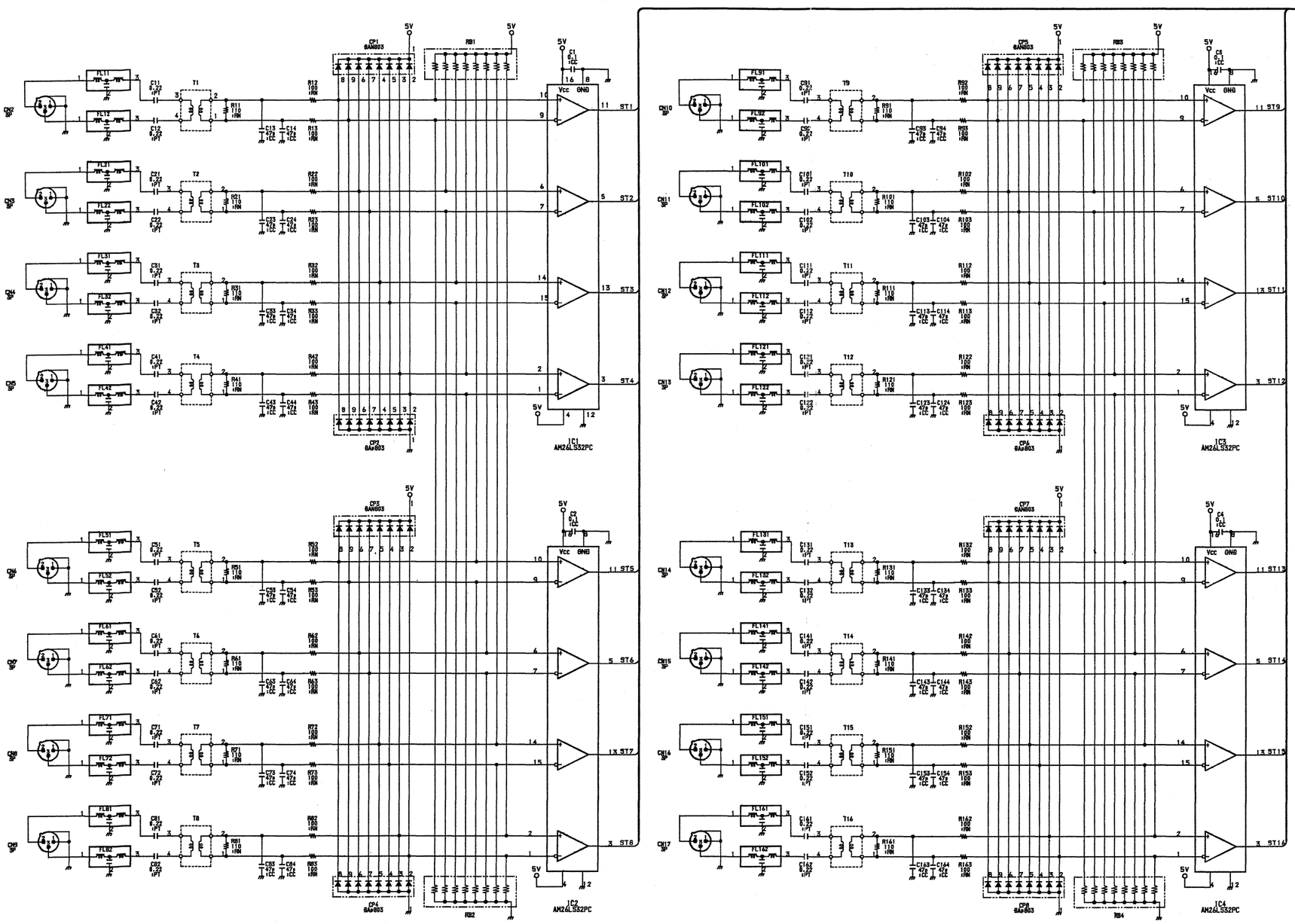

NOTE) DIFFERNCE OF CN-282B MOUNT

NOT IN USE : C151 C152 C153 C154
CN16 R151 R152 R153
FL151 FL152 T15

Connector Board
CN-828A
CN-828B BOARD

BOARD NO. 1-650-118-11
DMX-B4016

4-110

CN-830
DMX-B4016 PROCESSOR

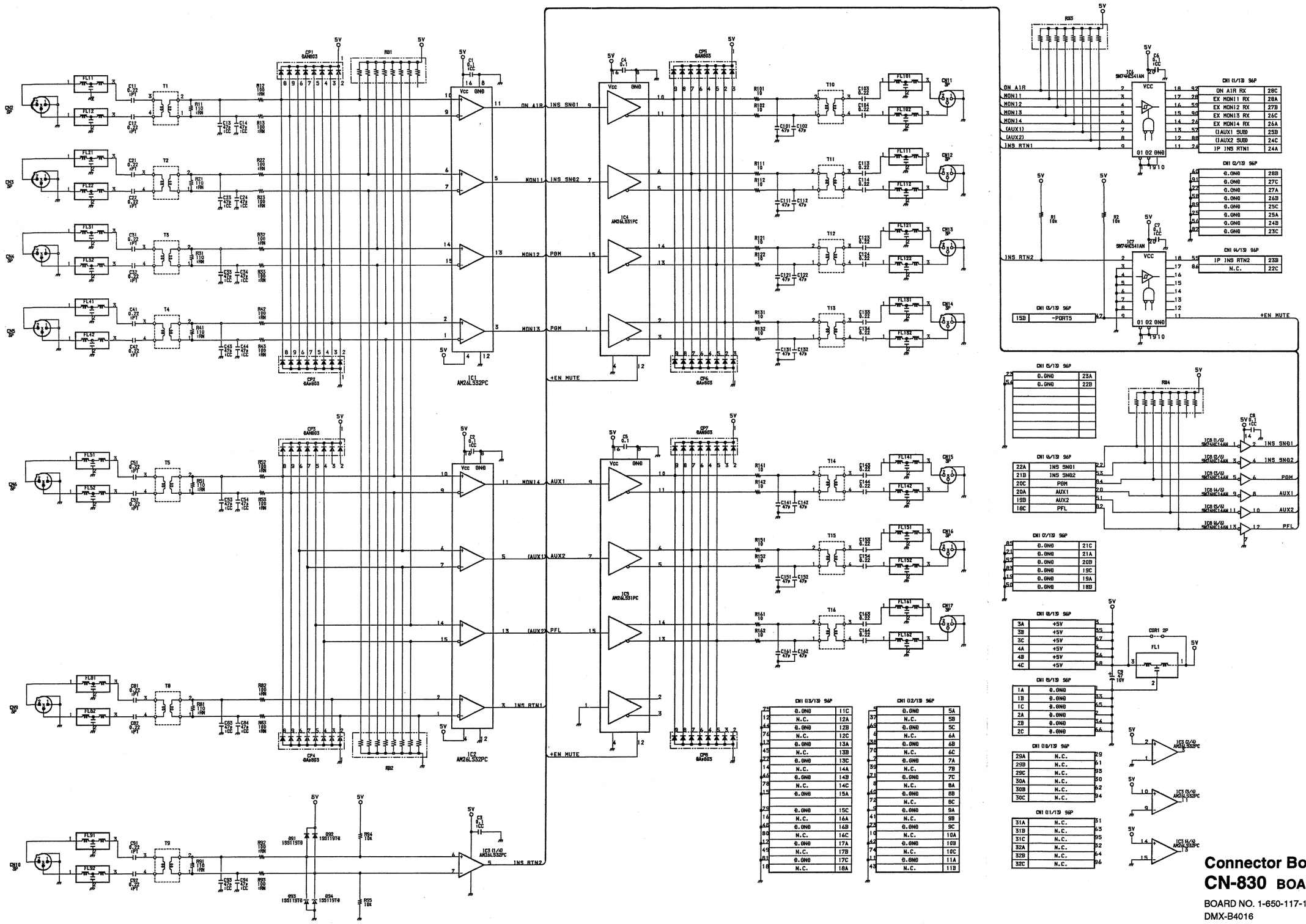

Connector Board
CN-830 BOARD

BOARD NO. 1-650-117-11
DMX-B4016

4-111

CN-831
DMX-B4016 PROCESSOR

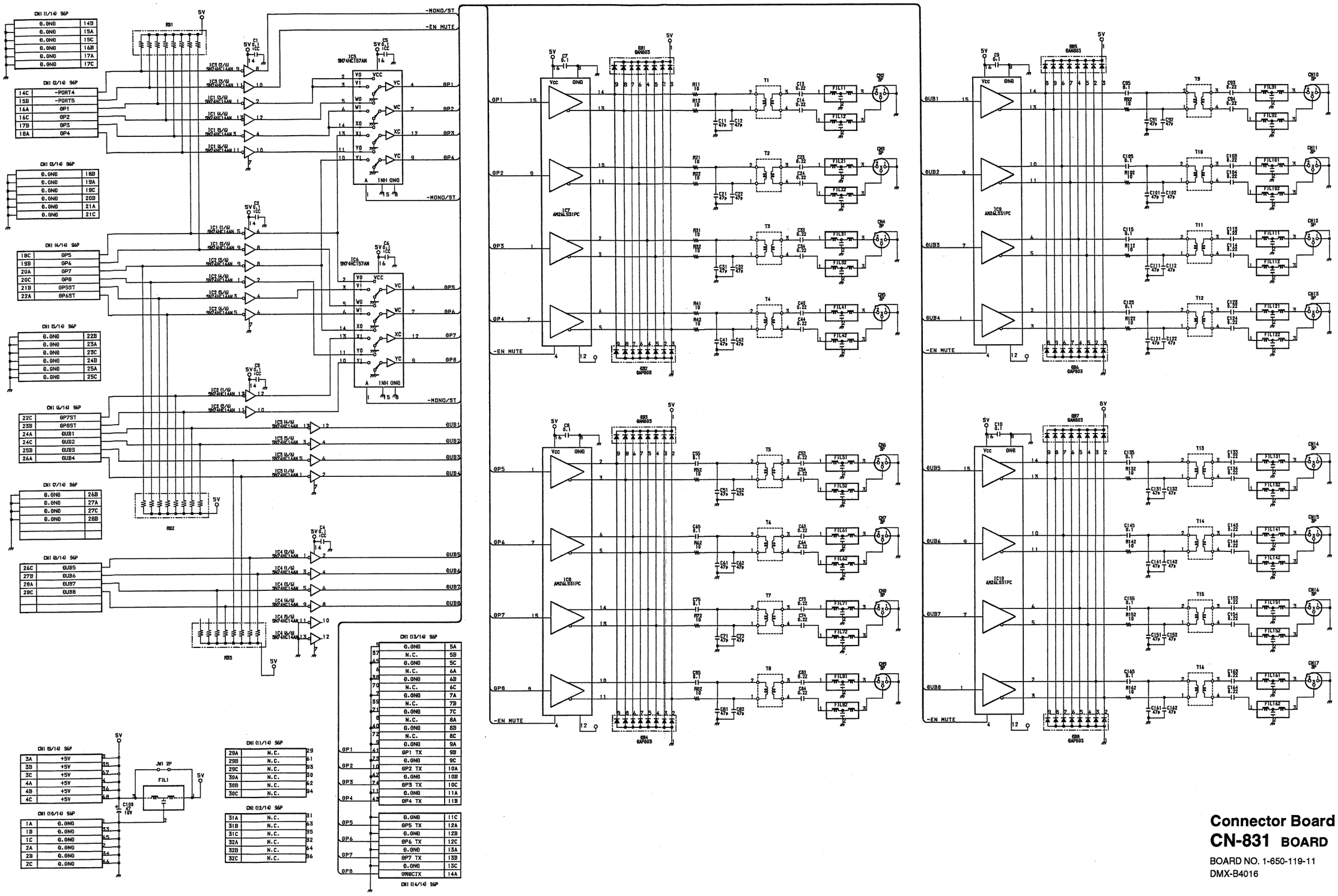

Connector Board
CN-831 BOARD

BOARD NO. 1-650-119-11
DMX-B4016

4-112

CN-832A/832B
DMX-B4016 PROCESSOR

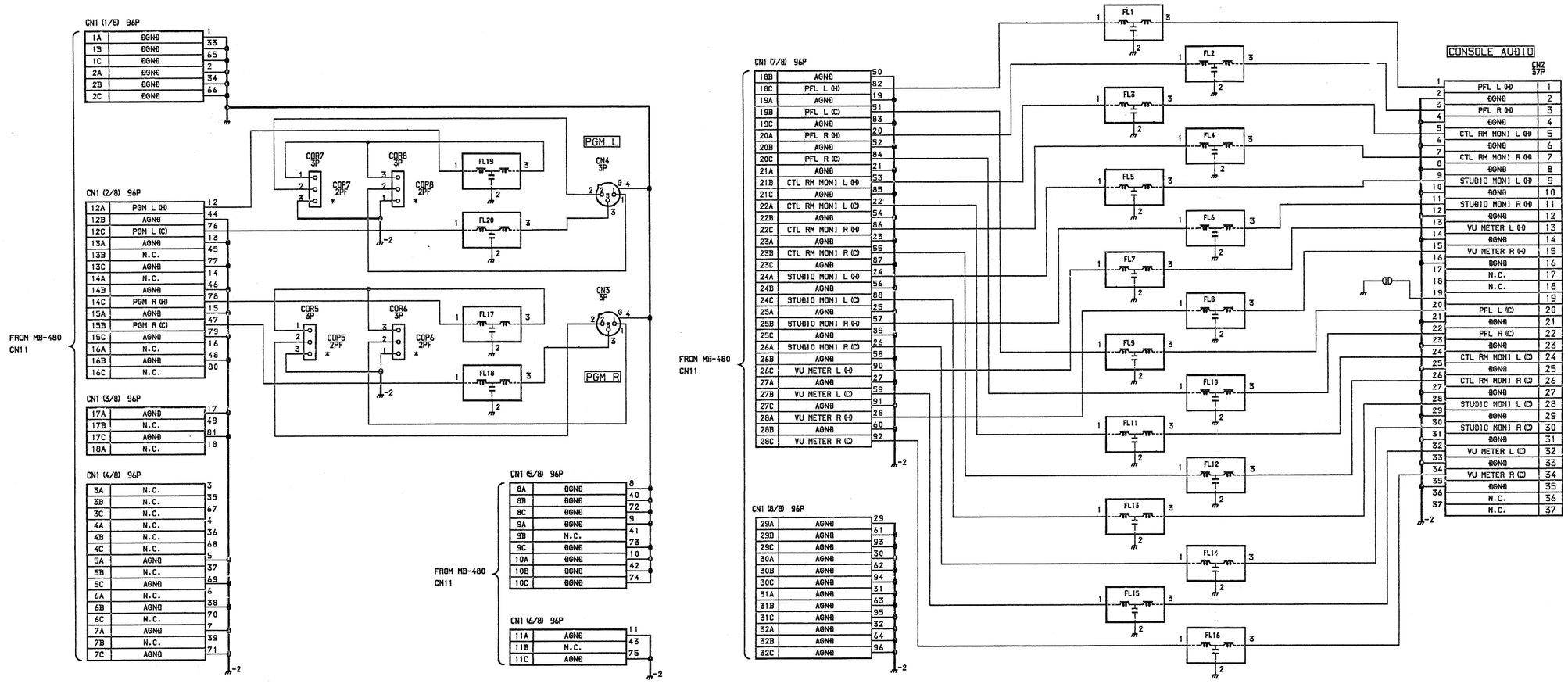

Connector Board
CN-832A (for UC/EK)
CN-832B (for J) BOARD

BOARD NO. 1-650-120-11
DMX-B4016

4-113

FRAME WIRING (1/3)
DMX-B4016 PROCESSOR

FRAME WIRING (1/3)
DMX-B4016 PROCESSOR

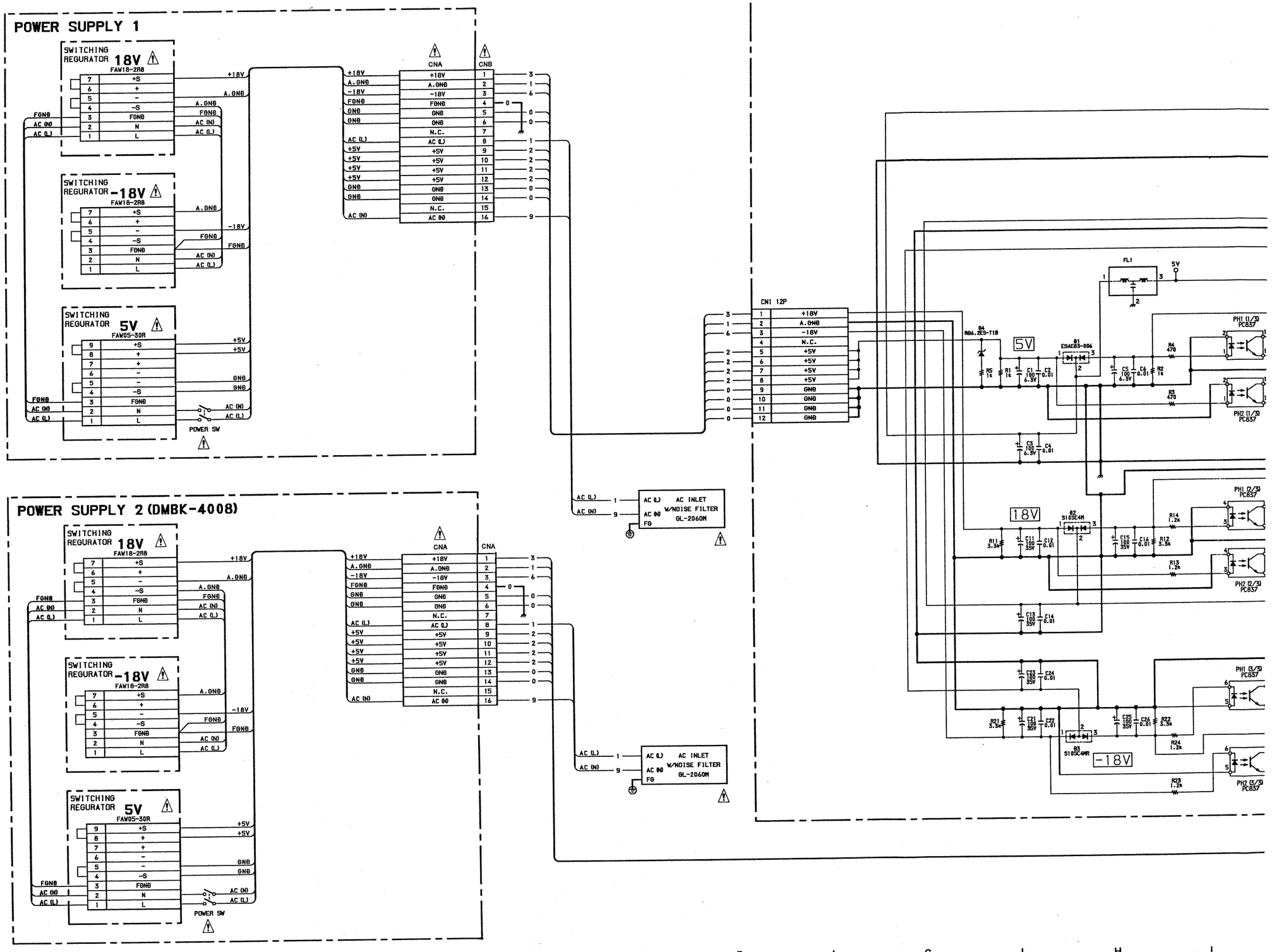

A B C D E F G H

FRAME WIRING (1/3)
DMX-B4016 PROCESSOR

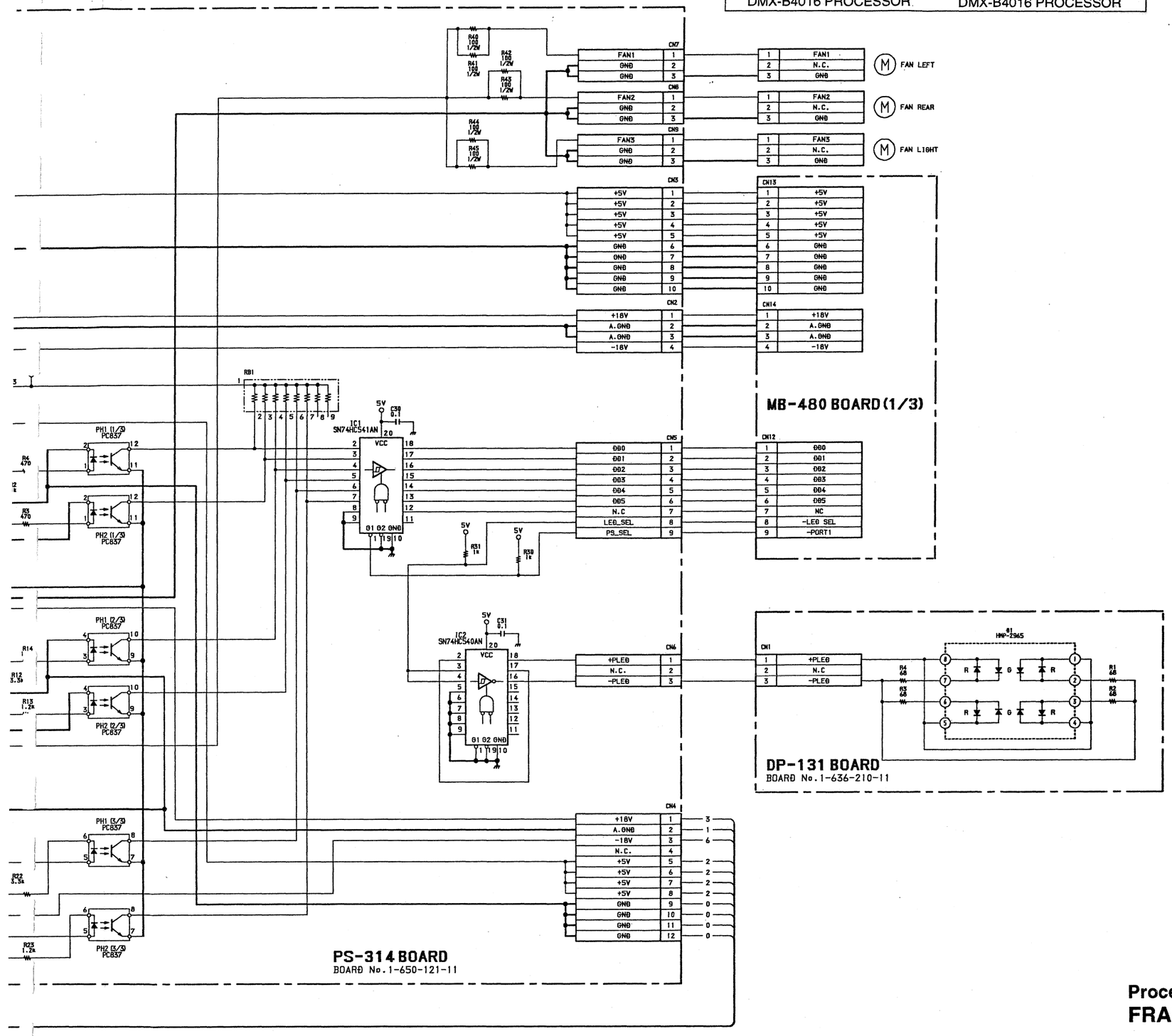

Processor
FRAME WIRING (1/3)

DMX-B4016

FRAME WIRING (2/3)
DMX-B4016 PROCESSOR

FRAME WIRING (2/3)
DMX-B4016 PROCESSOR

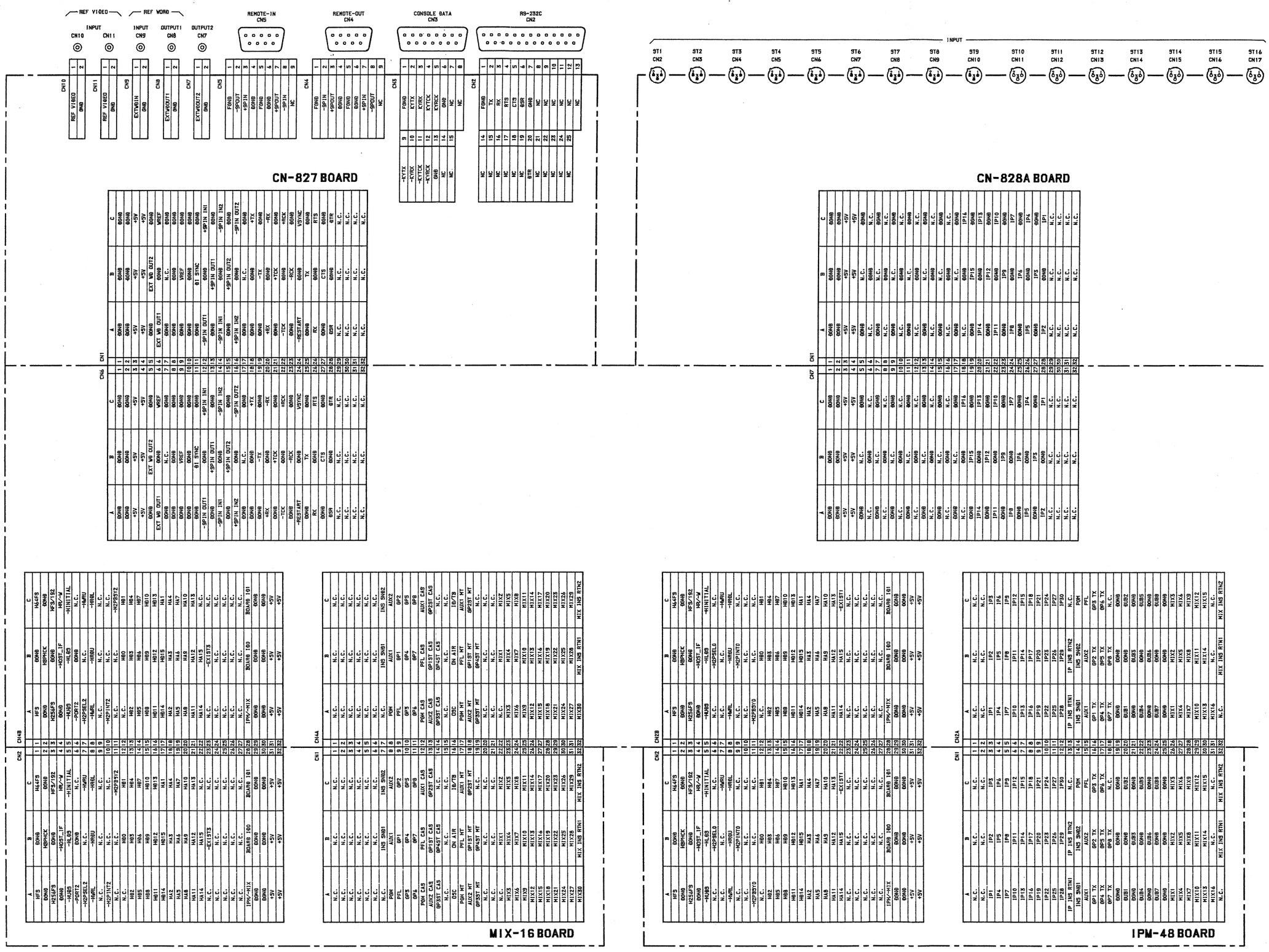

FRAME WIRING (2/3)
DMX-B4016 PROCESSOR

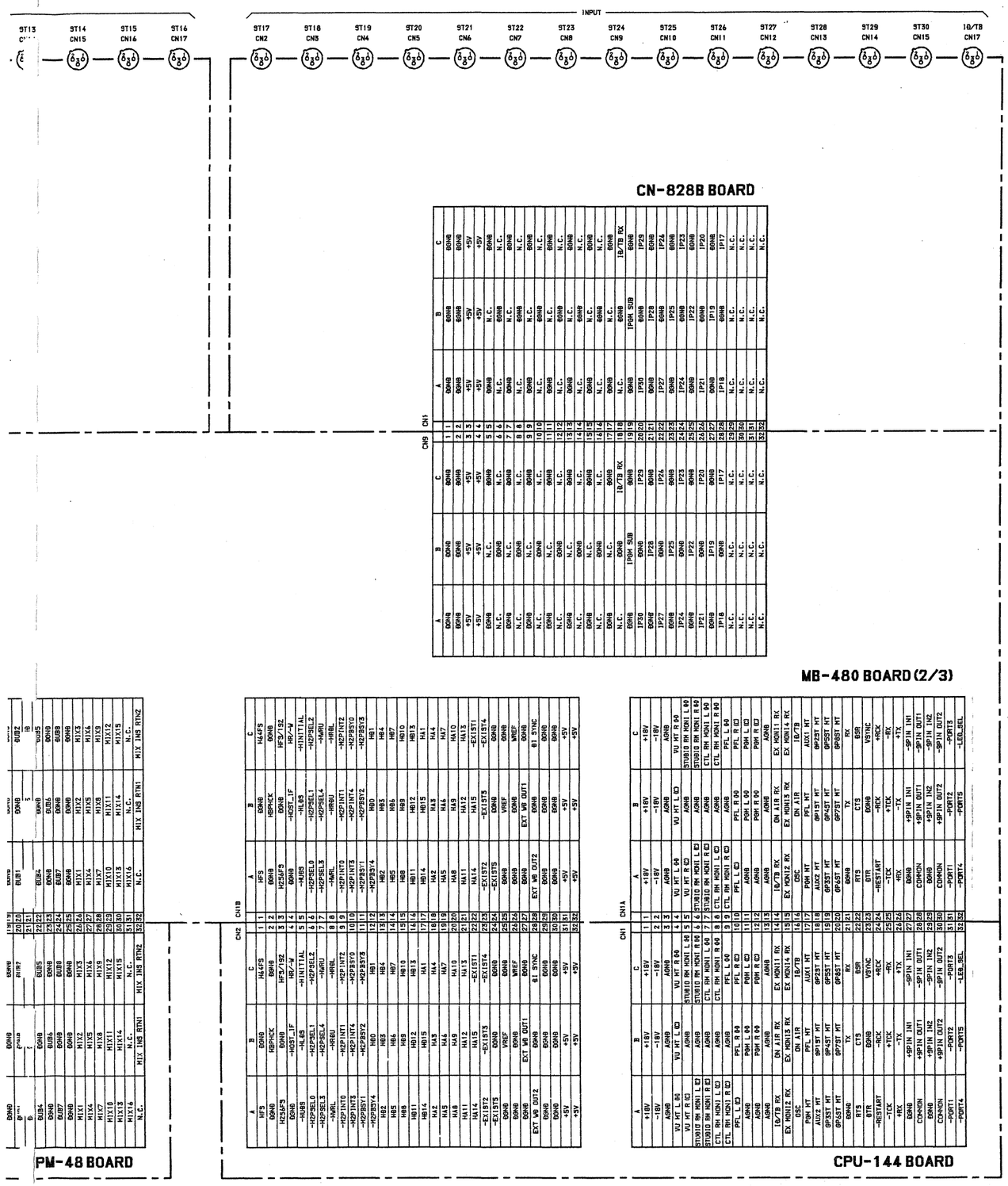

Processor
FRAME WIRING (2/3)

DMX-B4016

FRAME WIRING (3/3)
DMX-B4016 PROCESSOR

FRAME WIRING (3/3)
DMX-B4016 PROCESSOR

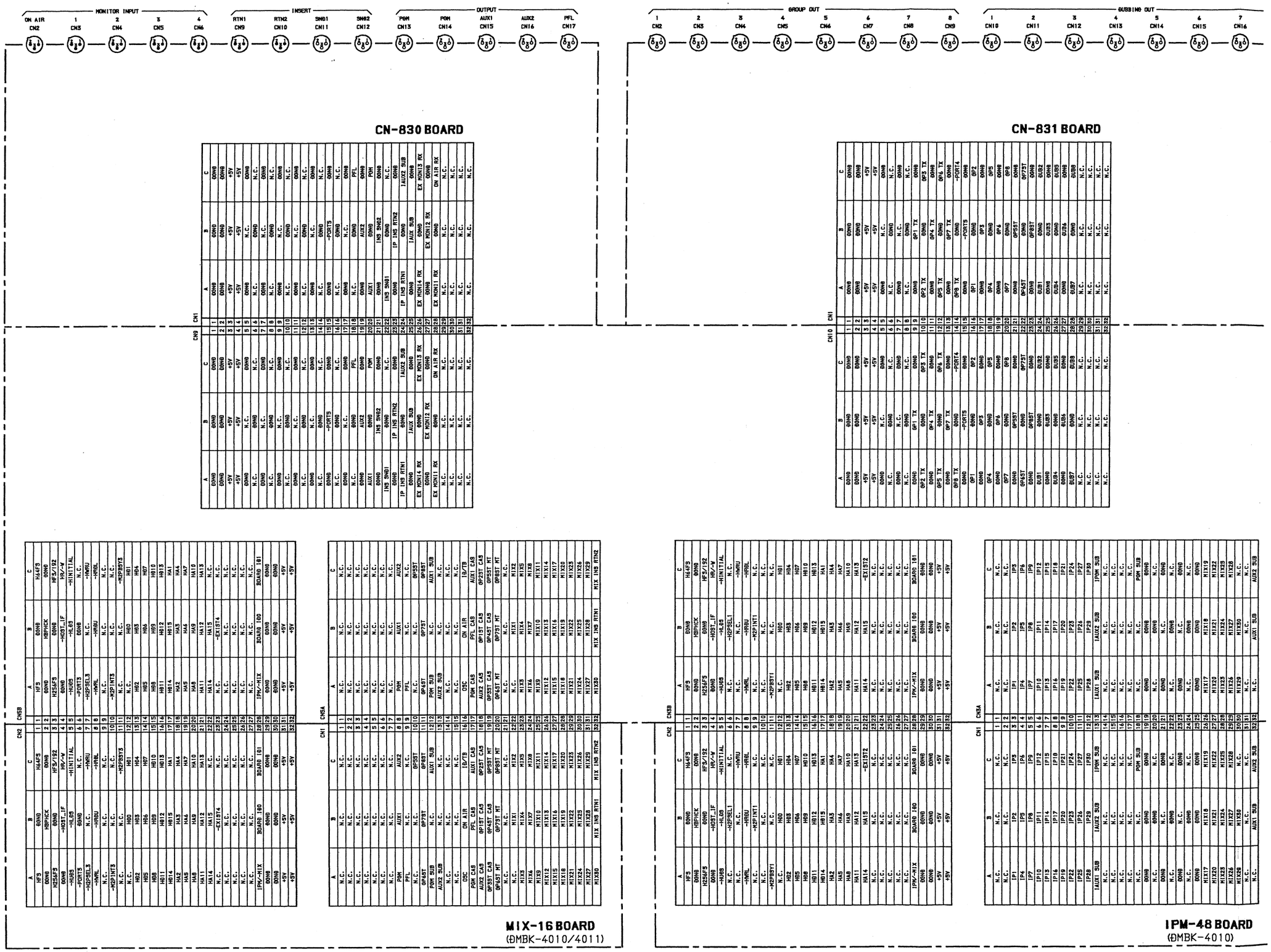

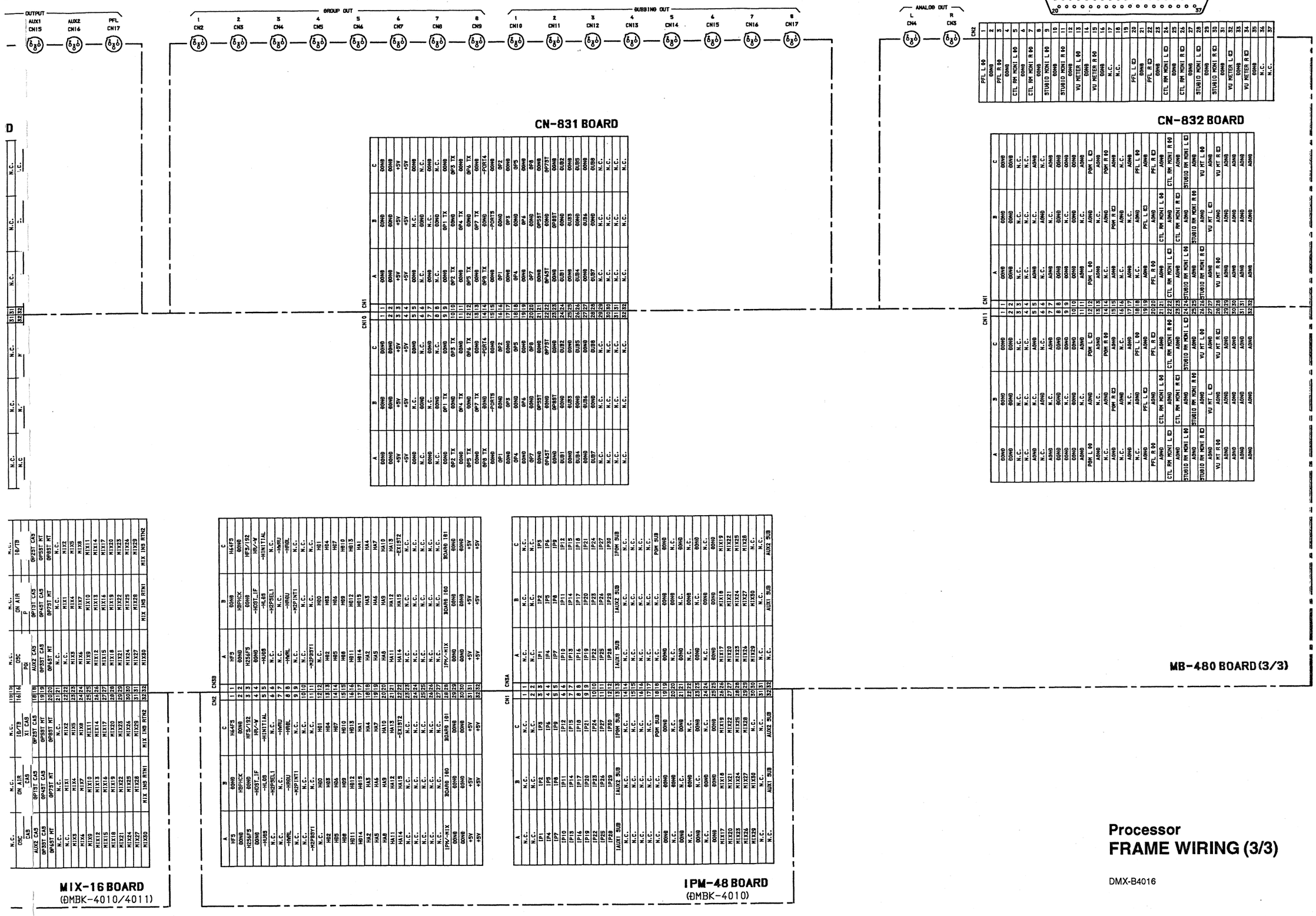
OUTPUT
AUX1 CN15
AUX2 CN16
PFL CN17
GROUP OUT
1 CN2
2 CN3
3 CN4
4 CN5
5 CN6
6 CN7
7 CN8
8 CN9
BUSSING OUT
1 CN10
2 CN11
3 CN12
4 CN13
5 CN14
6 CN15
7 CN16
8 CN17
ANALOG OUT
L CN4
R CN3
CONSOLE AUDIO
CN2
CN1
CN10
CN11
CN3B
CN2
CN1
CN3A
CN1
CN11
CN2
CN1
CN11
CN1
CN11
CN1
CN11

CPU-146 (1/7)
DMBK-4001 (OPTION)

4-4. OPTIONAL DMBK-4001

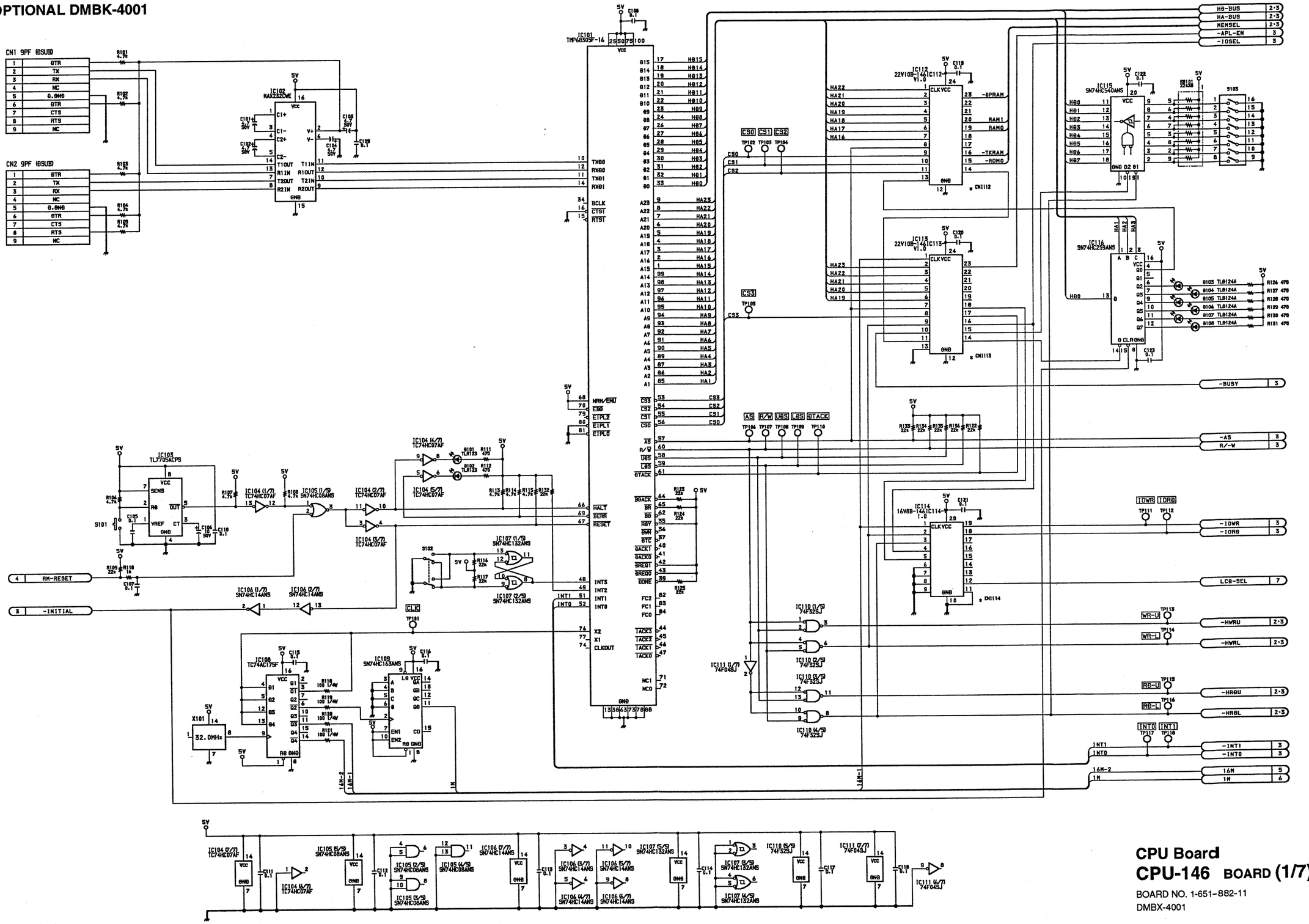

CPU Board
CPU-146 BOARD (1/7)

BOARD NO. 1-651-882-11
DMBX-4001

4-119

CPU-146 (2/7)
DMBK-4001 (OPTION)

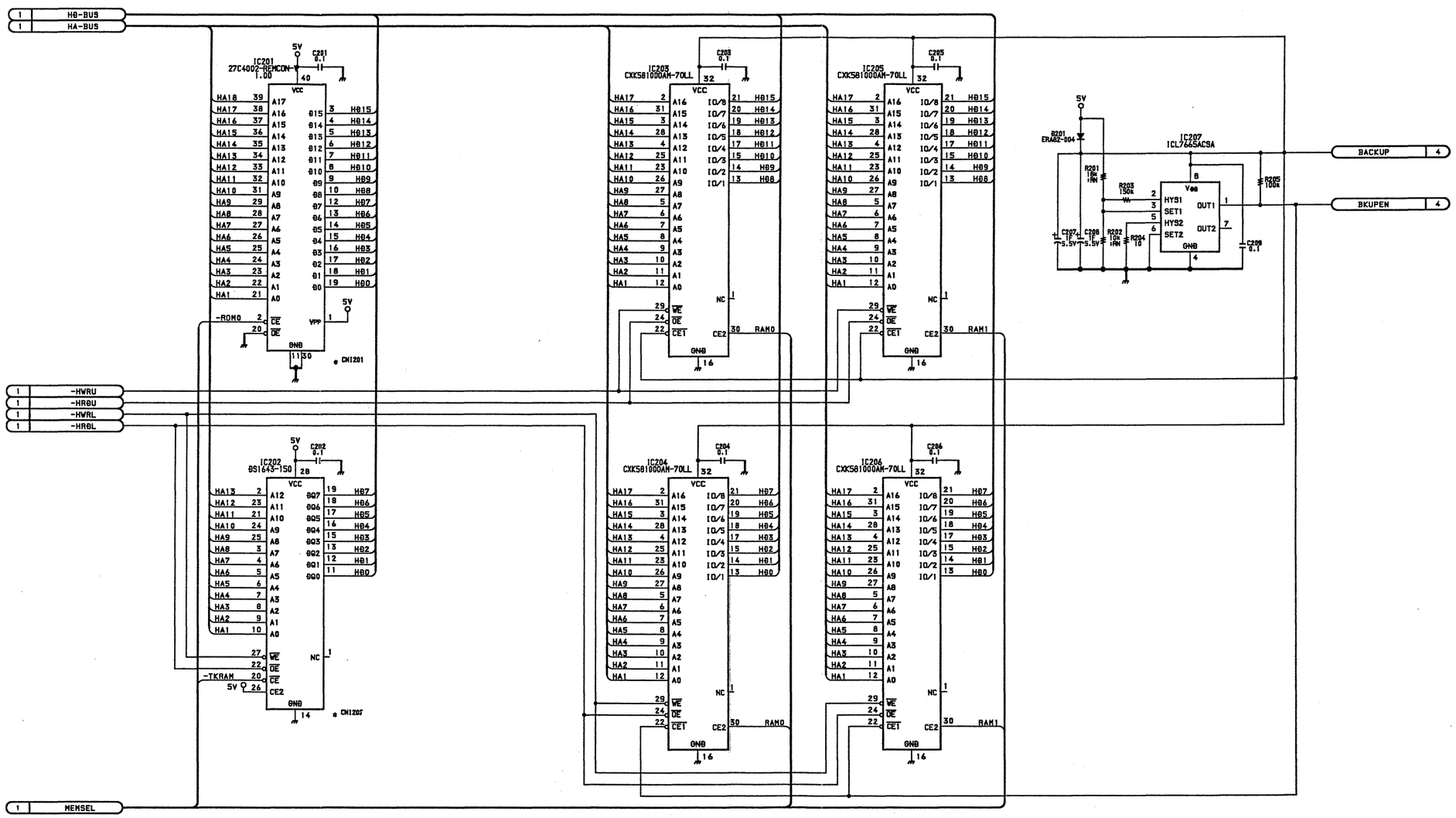

CPU Board
CPU-146 BOARD (2/7)

BOARD NO. 1-651-882-11
DMBX-4001

4-120

CPU-146 (3/7)
DMBK-4001 (OPTION)

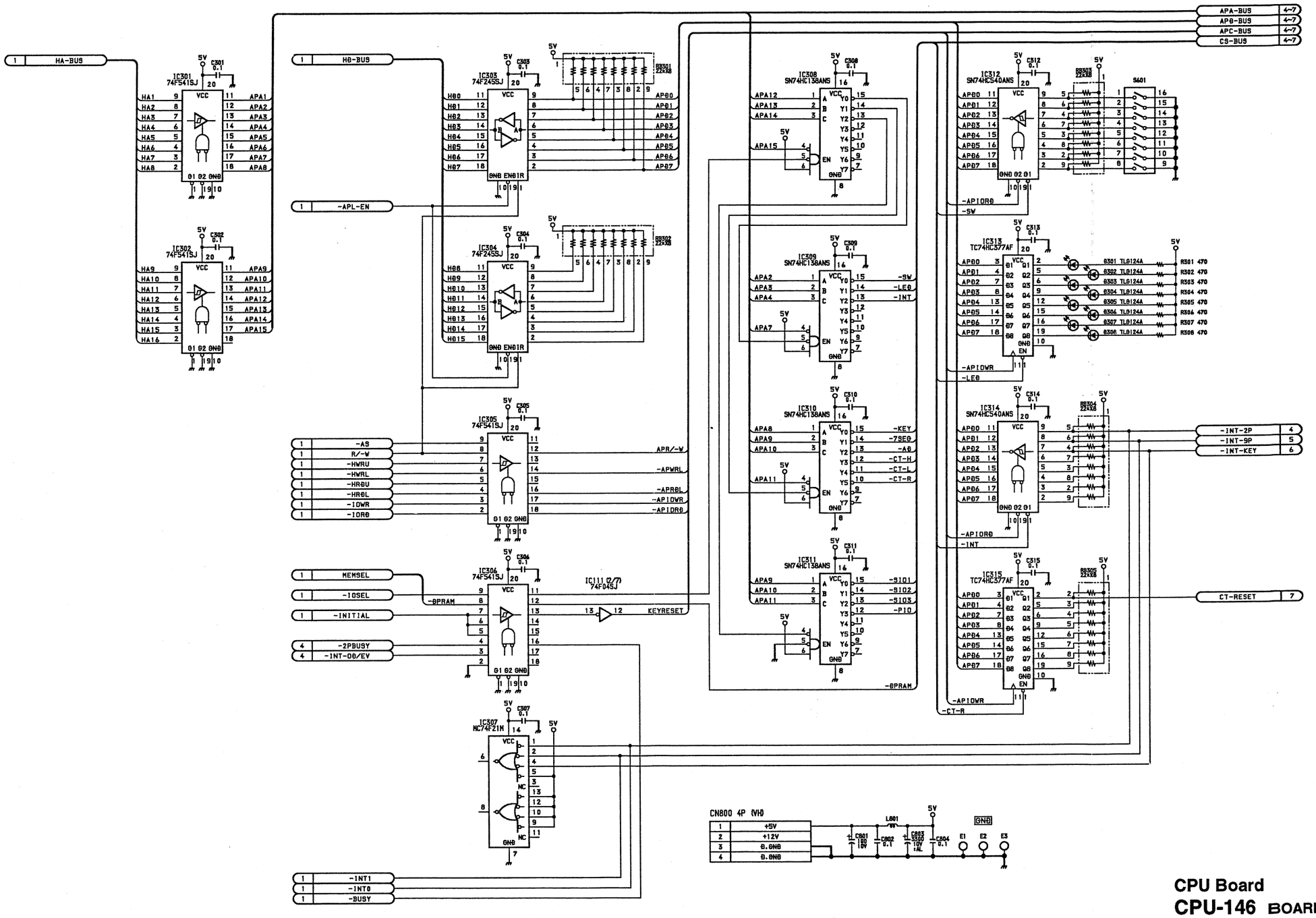

CPU Board
CPU-146 BOARD (3/7)

BOARD NO. 1-651-882-11
DMBX-4001

4-121

CPU-146 (4/7)
DMBK-4001 (OPTION)

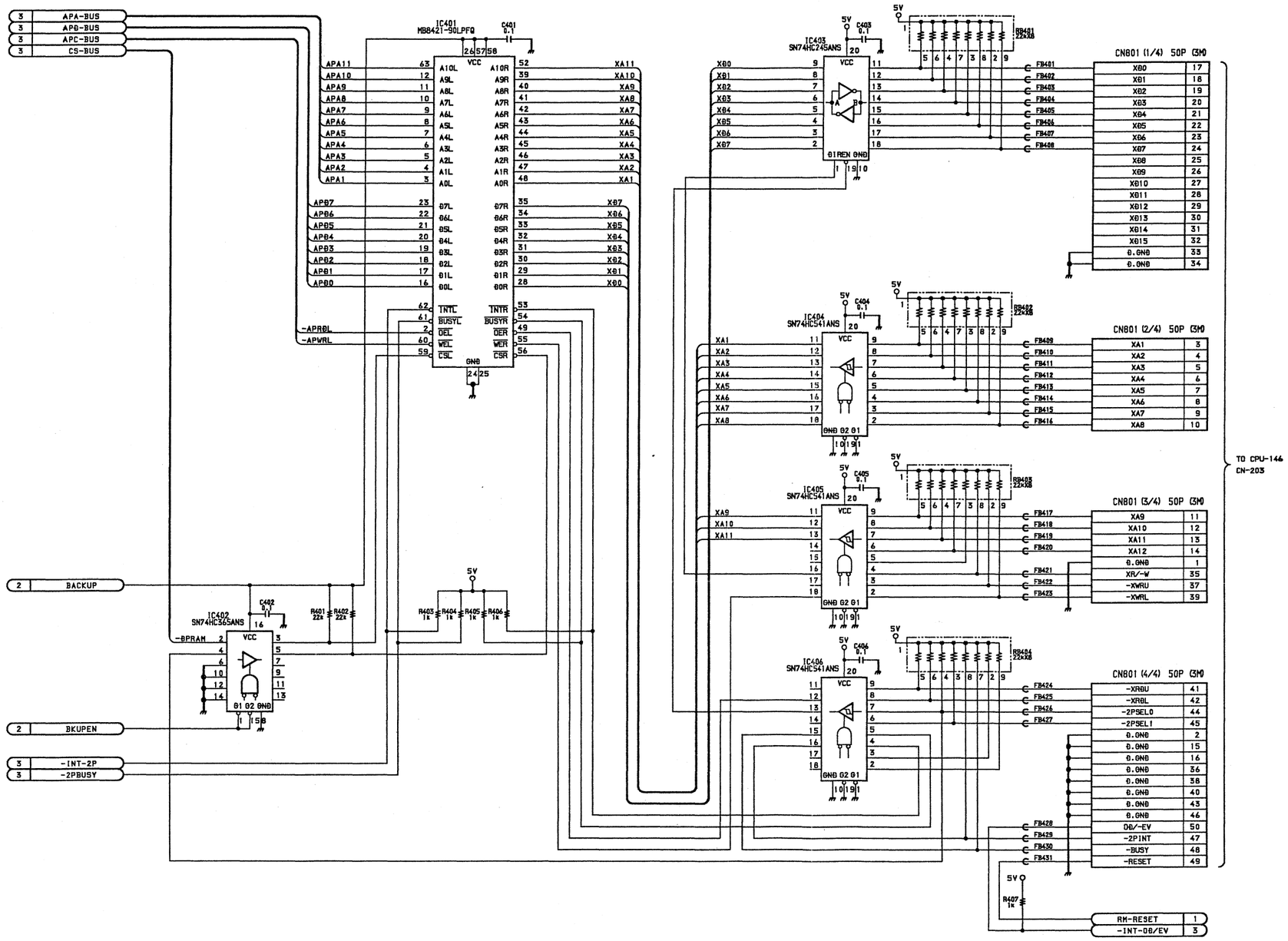

CPU Board
CPU-146 BOARD (4/7)

BOARD NO. 1-651-882-11
DMBX-4001

4-122

CPU-146 (5/7)
DMBK-4001 (OPTION)

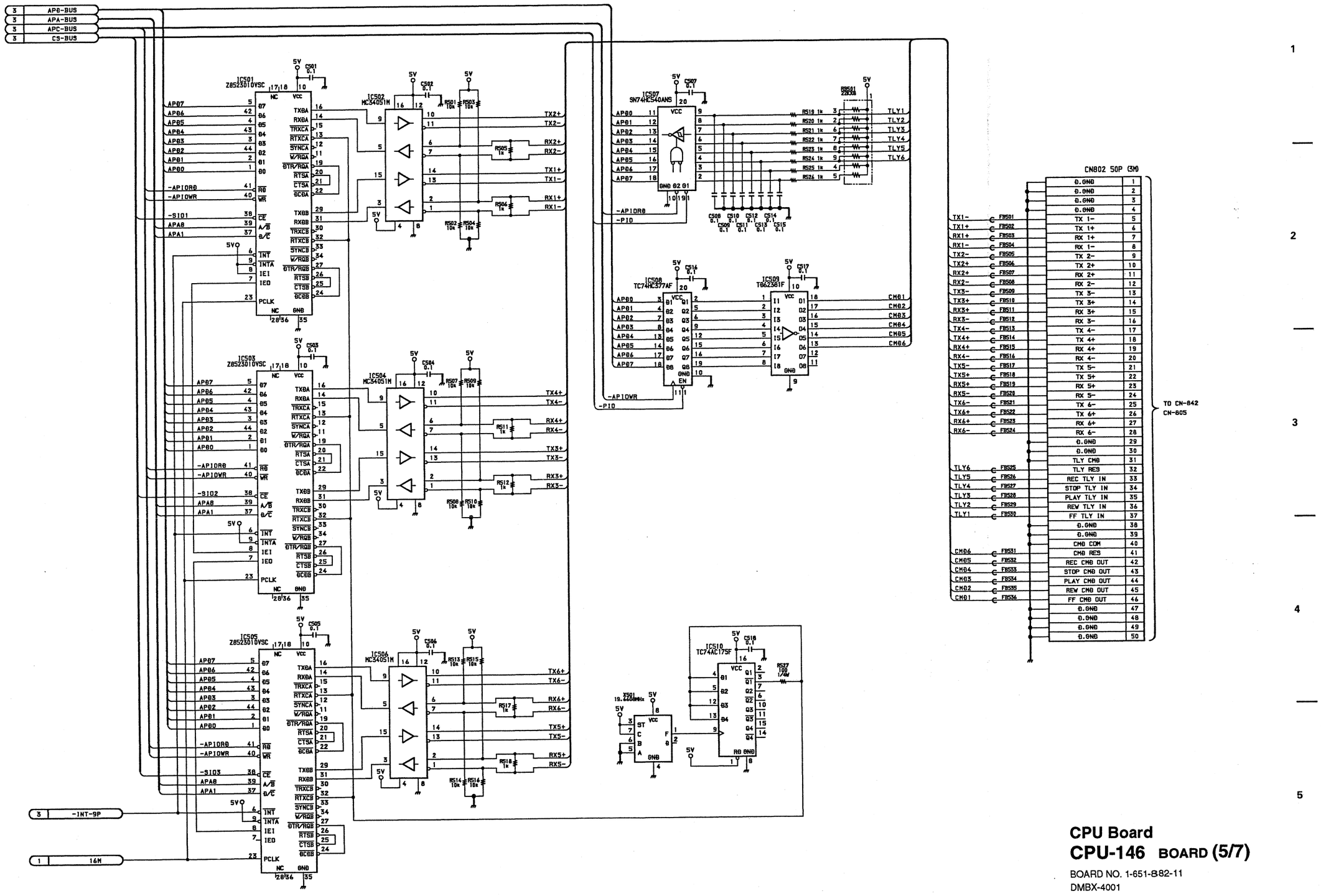

CPU Board
CPU-146 BOARD (5/7)

BOARD NO. 1-651-882-11
DMBX-4001

4-123

CPU-146 (6/7)
DMBK-4001 (OPTION)

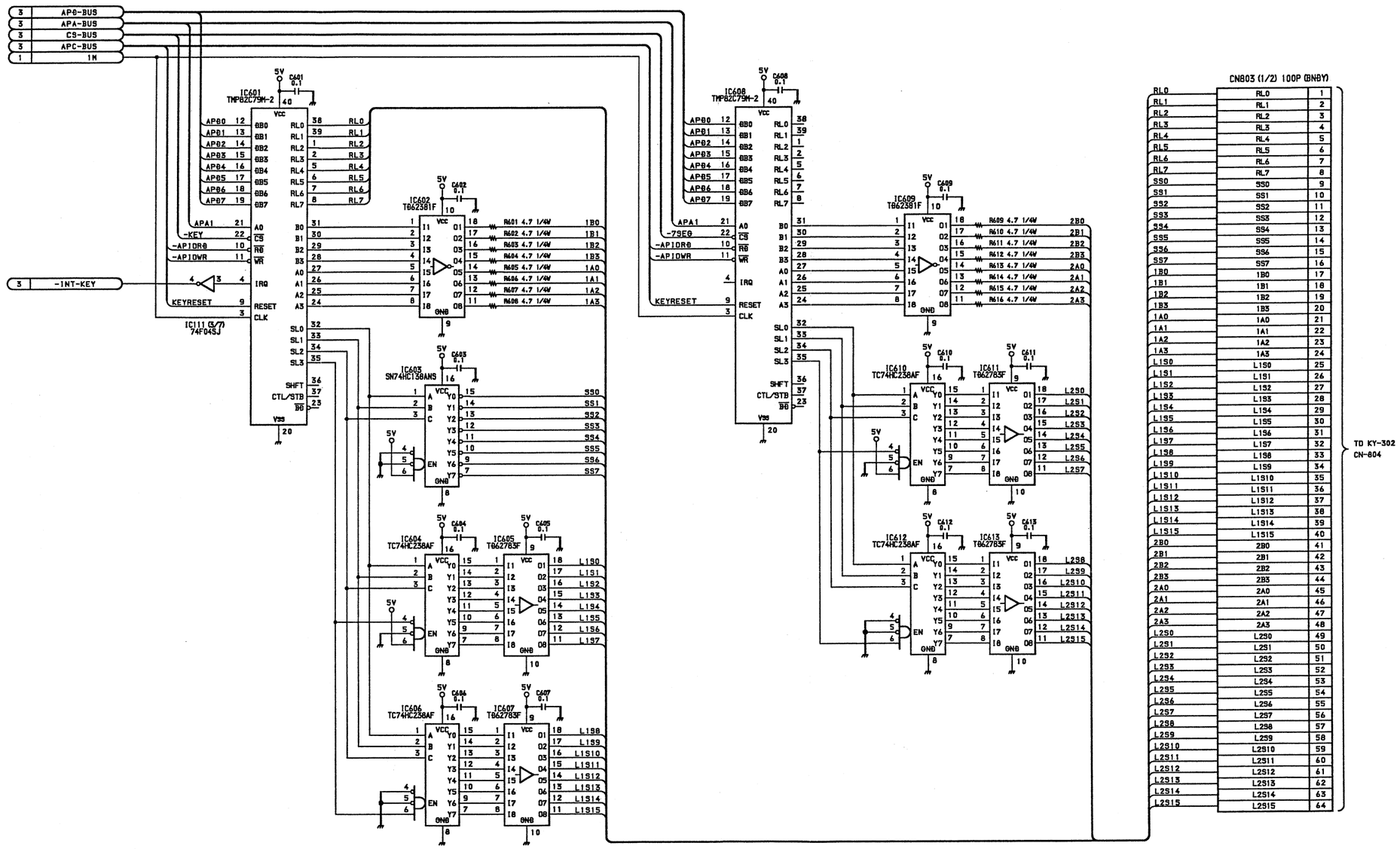

CPU Board
CPU-146 BOARD (6/7)

BOARD NO. 1-651-882-11
DMBX-4001

4-124

CPU-146 (7/7)
DMBK-4001 (OPTION)

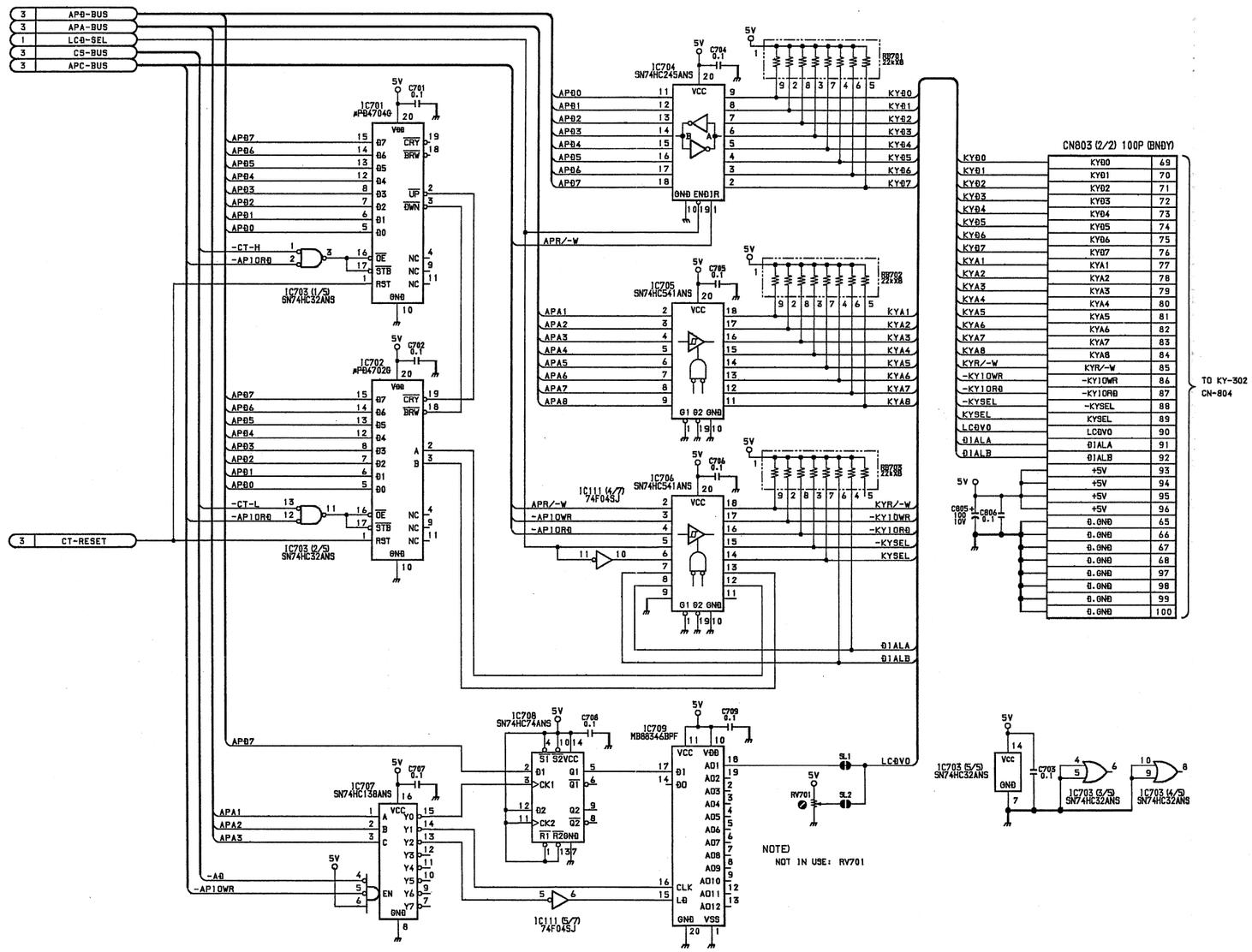

CPU Board
CPU-146 BOARD (7/7)

BOARD NO. 1-651-882-11
DMBX-4001

4-125

KY-302 (1/2)
DMBK-4001 (OPTION)

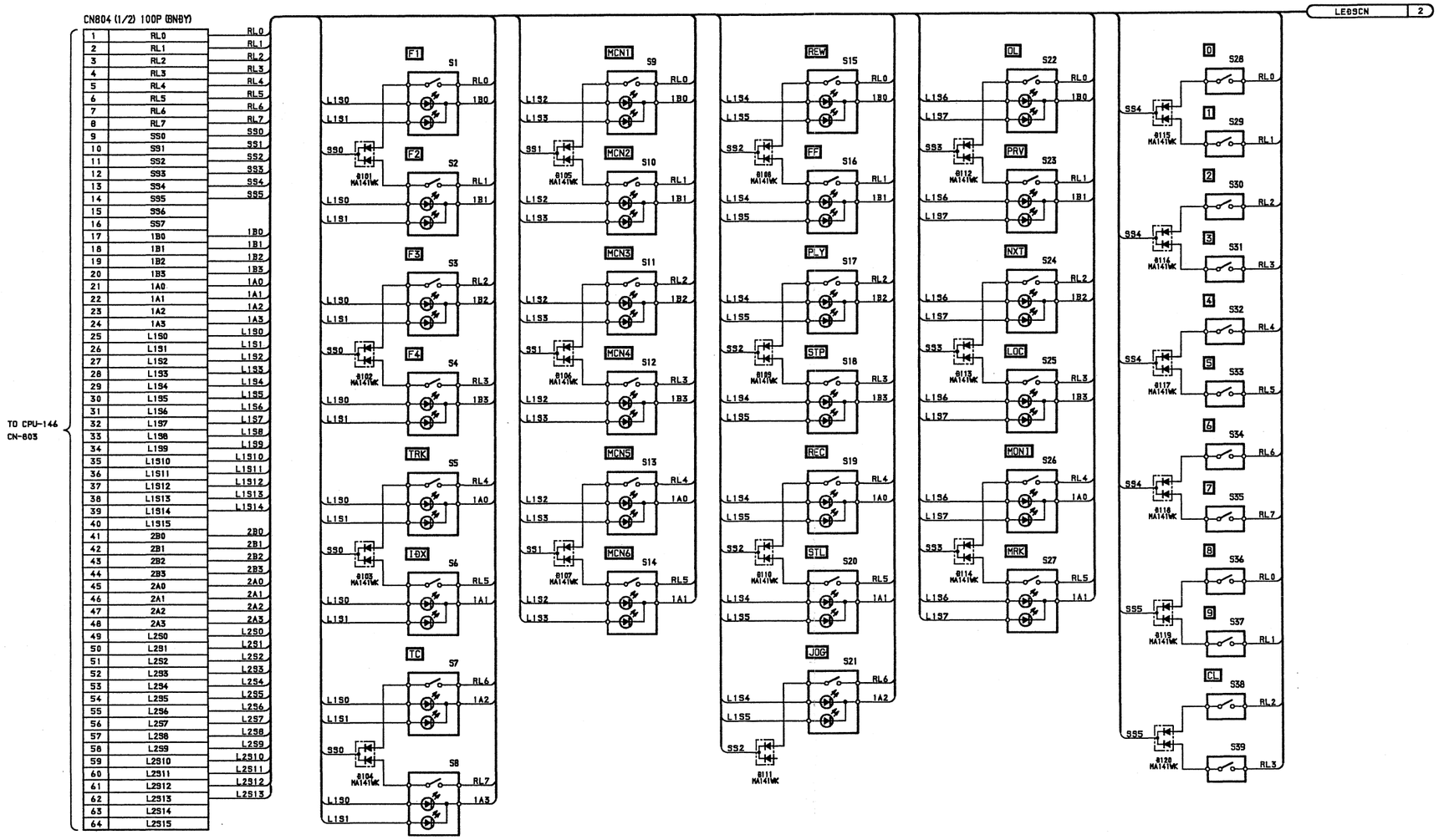

Switch Board
KY-302 BOARD (1/2)

BOARD NO. 1-651-883-11
DMBX-4001

4-126

KY-302 (2/2)
DMBK-4001 (OPTION)

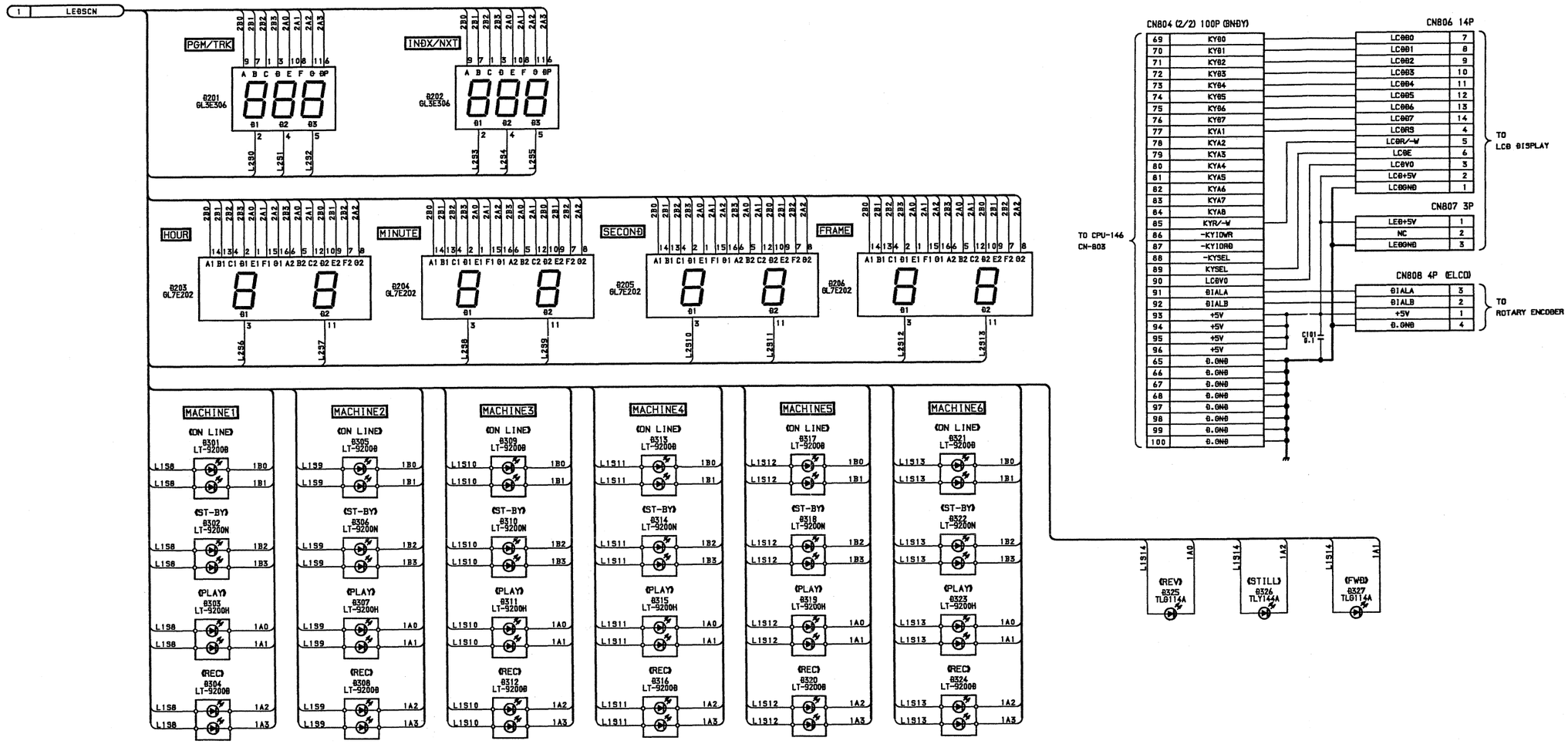

Switch Board
KY-302 BOARD (2/2)

BOARD NO. 1-651-883-11
DMBX-4001

4-127

CN-842
DMBK-4001 (OPTION)

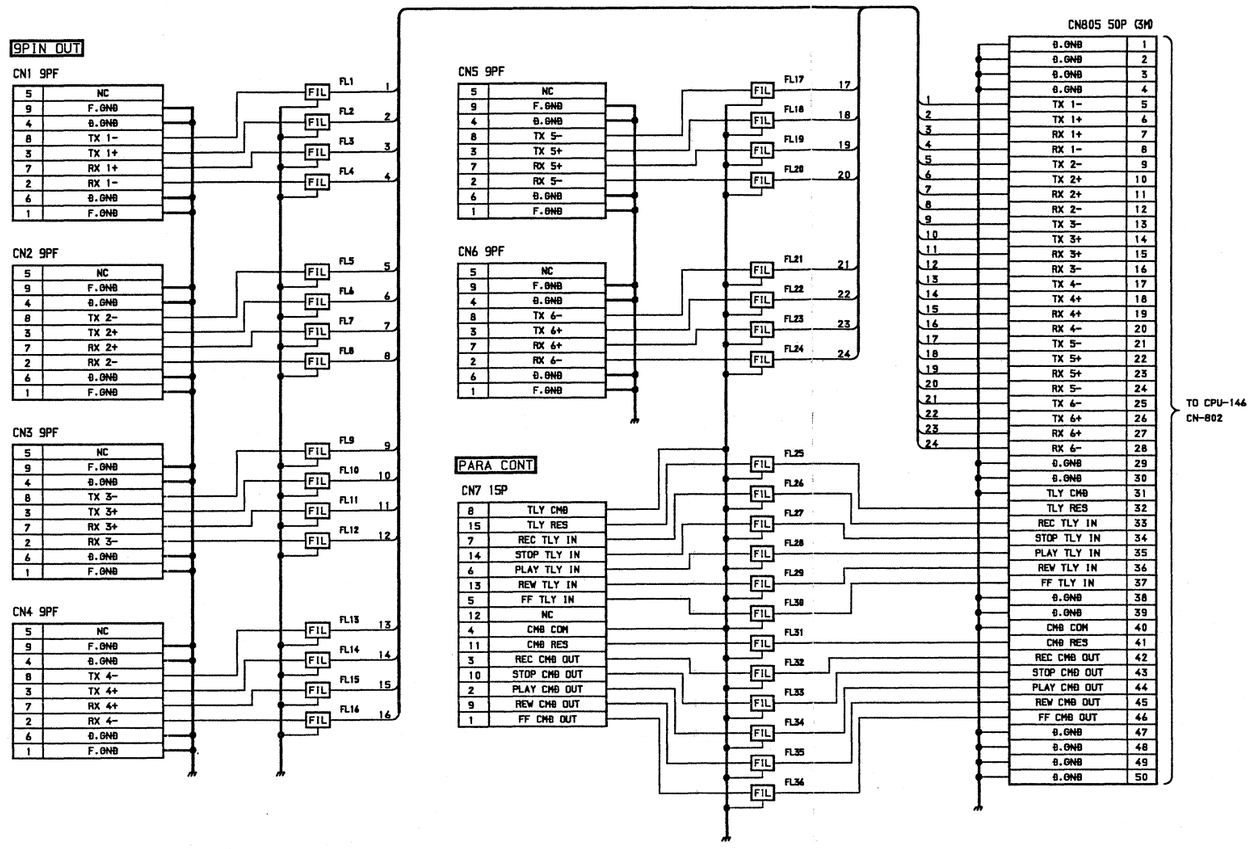

Connector Board
CN-842 BOARD

BOARD NO. 1-651-884-11
DMBX-4001

4-128

AD-100 (1/4)
DMBK-4012 (OPTION)

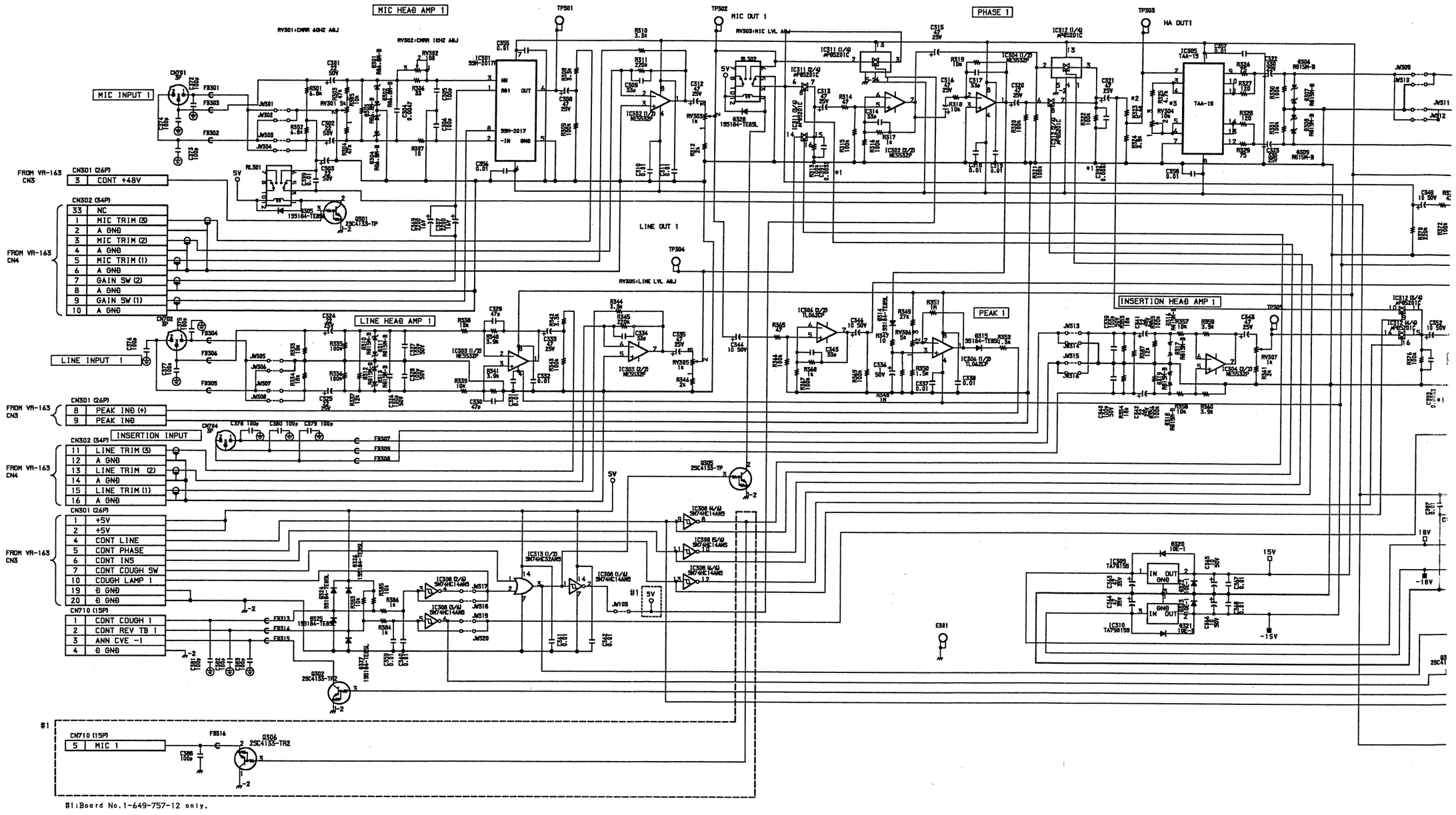

A B C D E F G H

AD-100 (1/4)
DMBK-4012 (OPTION)

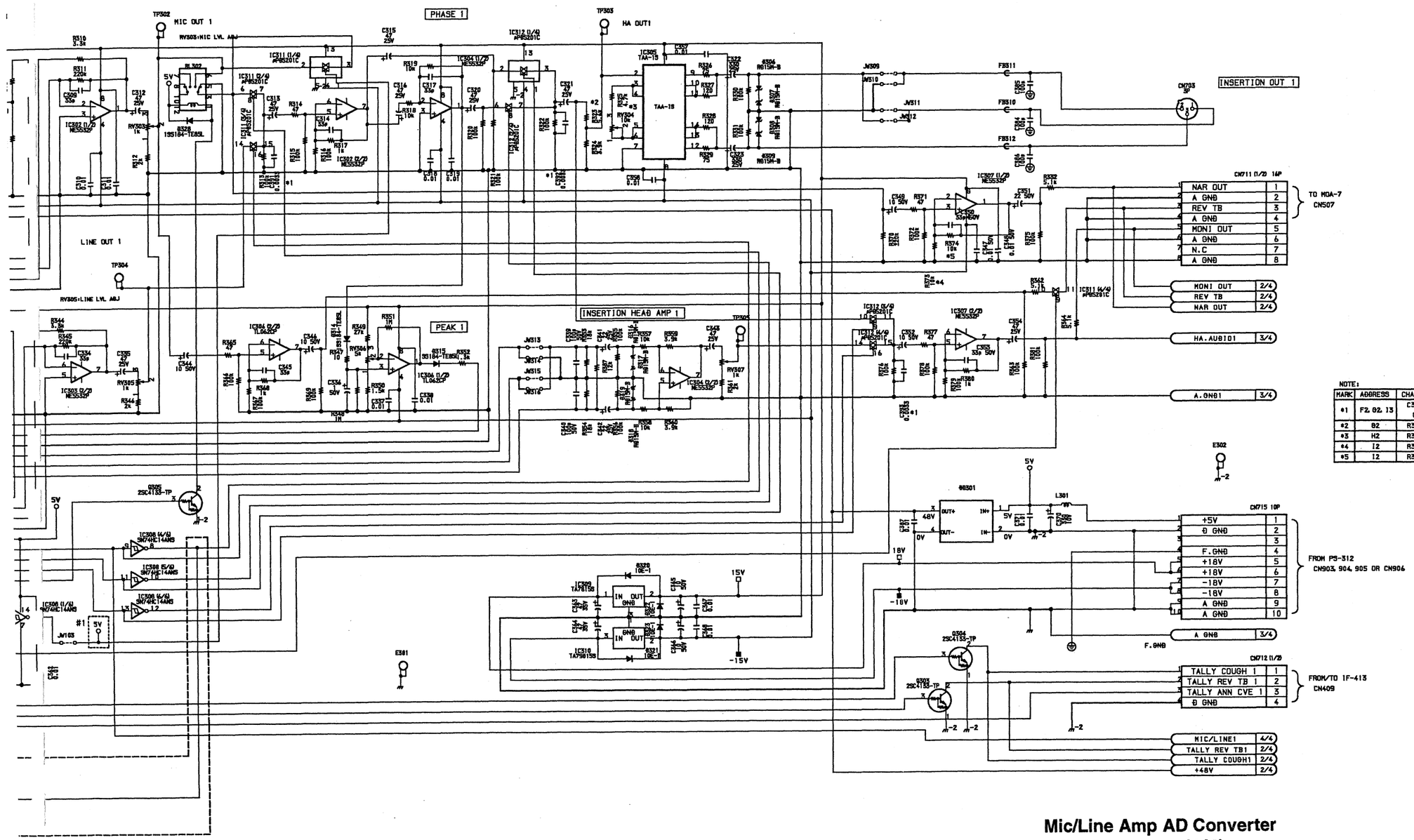

NOTE:

MARK	ADDRESS	CHANGED INFORMATION	SERIAL No.
*1	F2, G2, I3	C391, C392, C393 0.0033→ ADDITION	100016-
*2	B2	R323 10K → 5.6K	100016-
*3	H2	R325 10K → 4.7K	100016-
*4	I2	R373 100K → 10K	100056-
*5	I2	R374 1K → 10K	100056-

Mic/Line Amp AD Converter
AD-100 BOARD (1/4)

BOARD NO. 1-649-757-11, 12
DMBK-4012

AD-100 (2/4)
DMBK-4012 (OPTION)

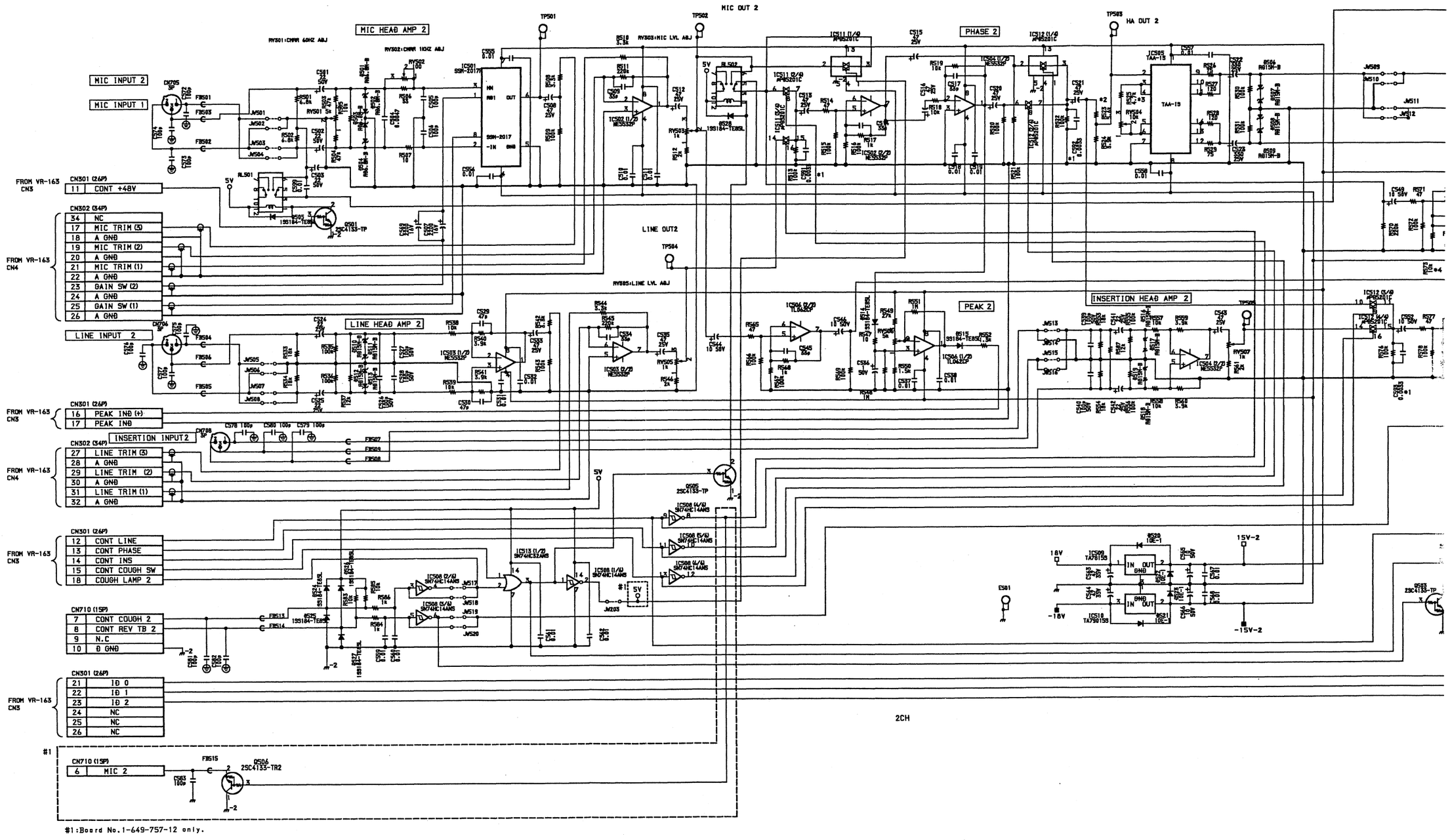

4-130

AD-100 (2/4)
DMBK-4012 (OPTION)

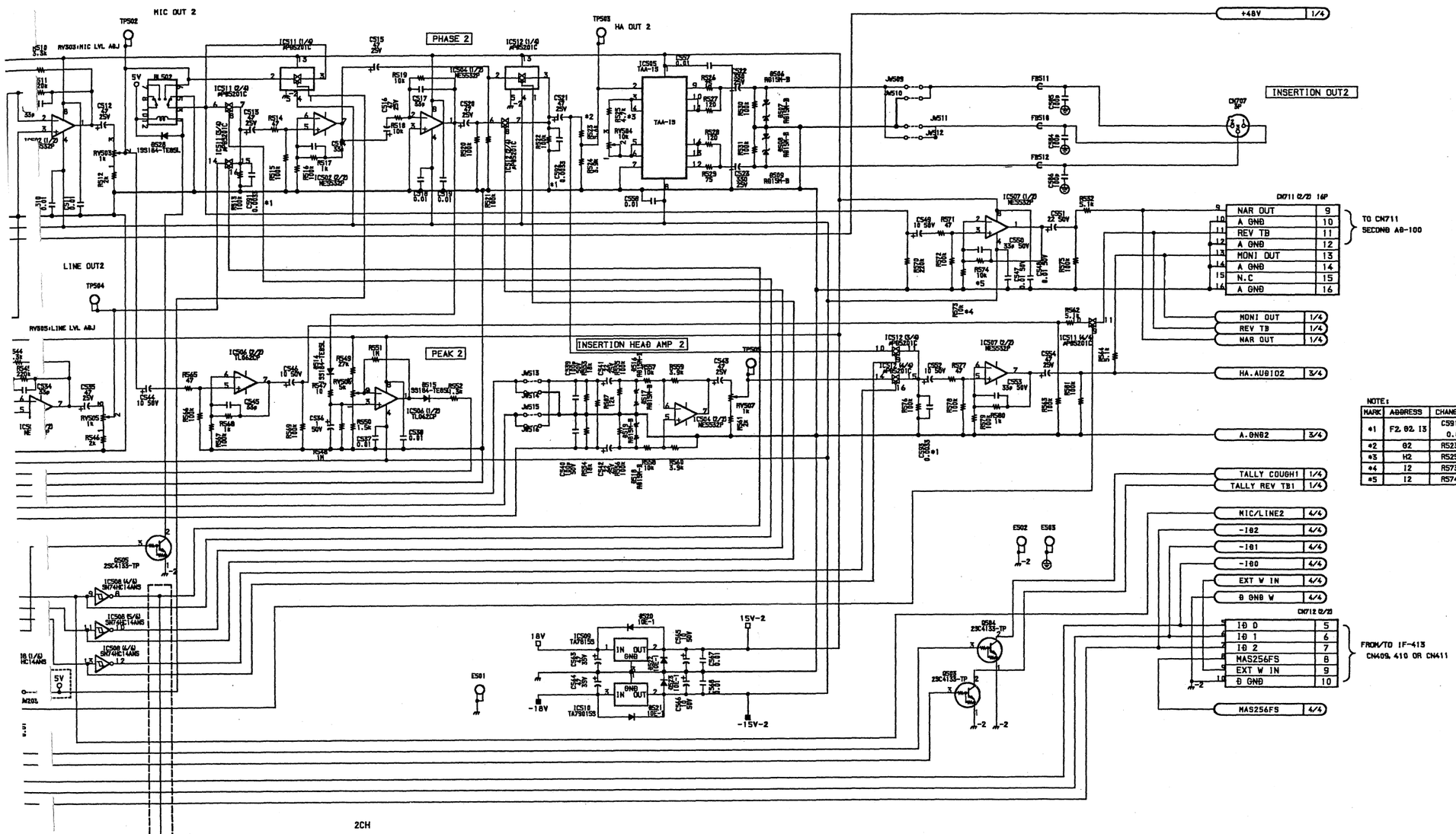

NOTE:

MARK	ADDRESS	CHANGED INFORMATION	SERIAL No.
*1	F2, G2, I3	C591, C592, C593 0.0033→ ADDITION	10016-
*2	G2	R523 10K → 5.6K	10016-
*3	H2	R525 10K → 4.7K	10016-
*4	I2	R573 100K → 10K	10036-
*5	I2	R574 1K → 10K	10036-

Mic/Line Amp AD Converter
AD-100 BOARD (2/4)

BOARD NO. 1-649-757-11, 12
DMBK-4012

E F G H I J K L

AD-100 (3/4)
DMBK-4012 (OPTION)

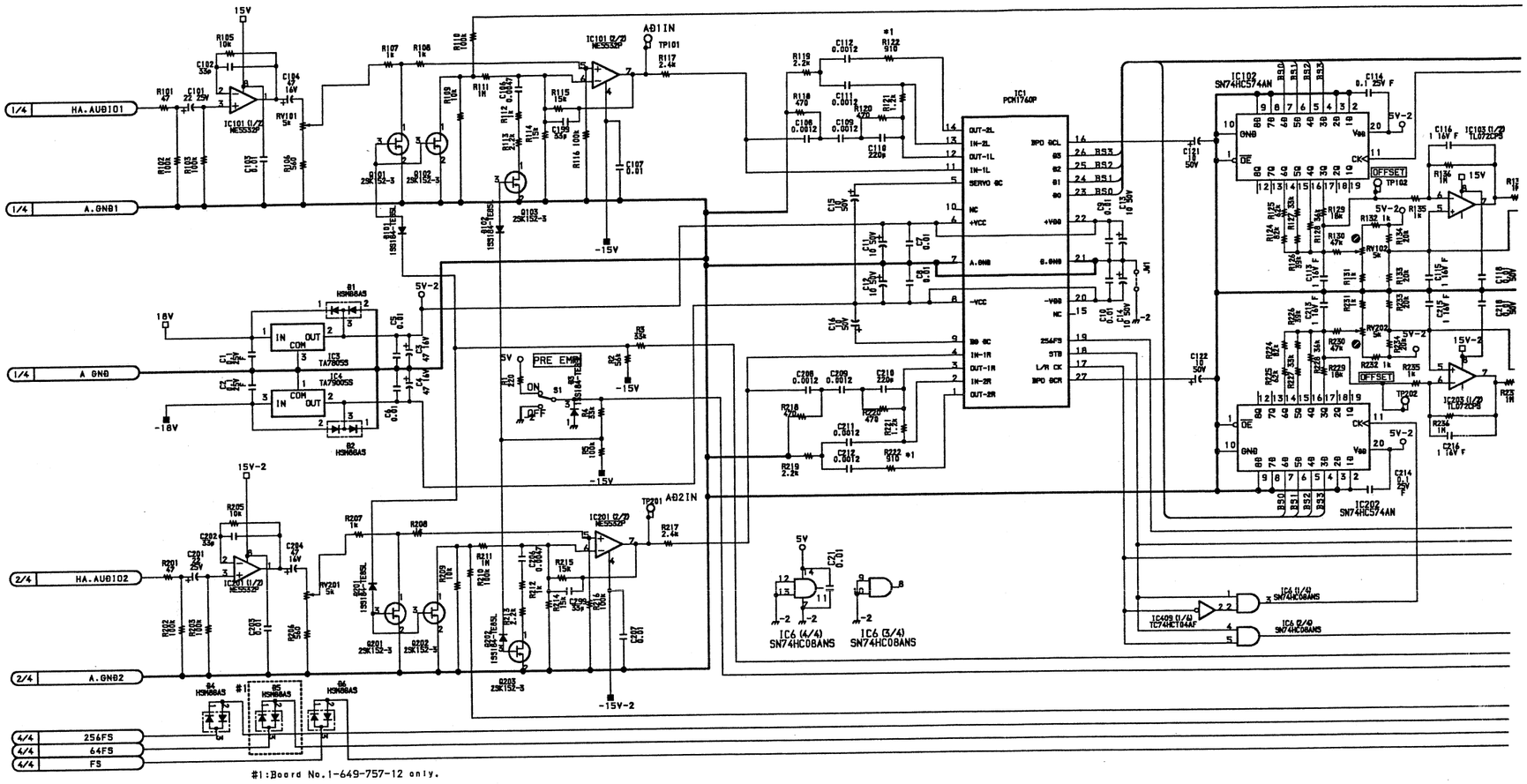

#1:Board No.1-649-757-12 only.

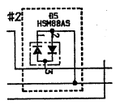

#2:Board No.1-649-757-11 only.

A B C D E F G H

AD-100 (4/4)
DMBK-4012 (OPTION)

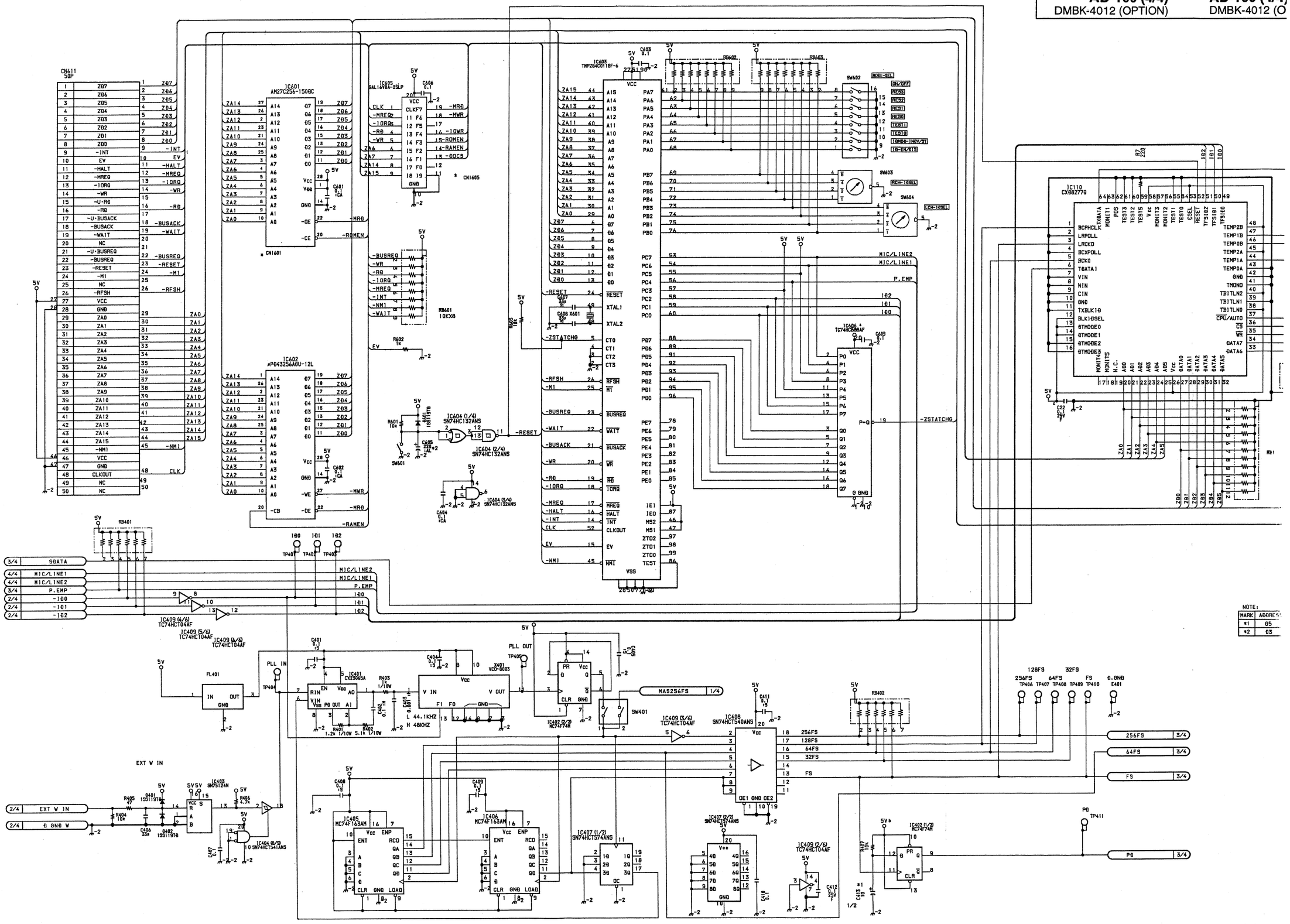

4-132

AD-100 (4/4)
DMBK-4012 (OPTION)

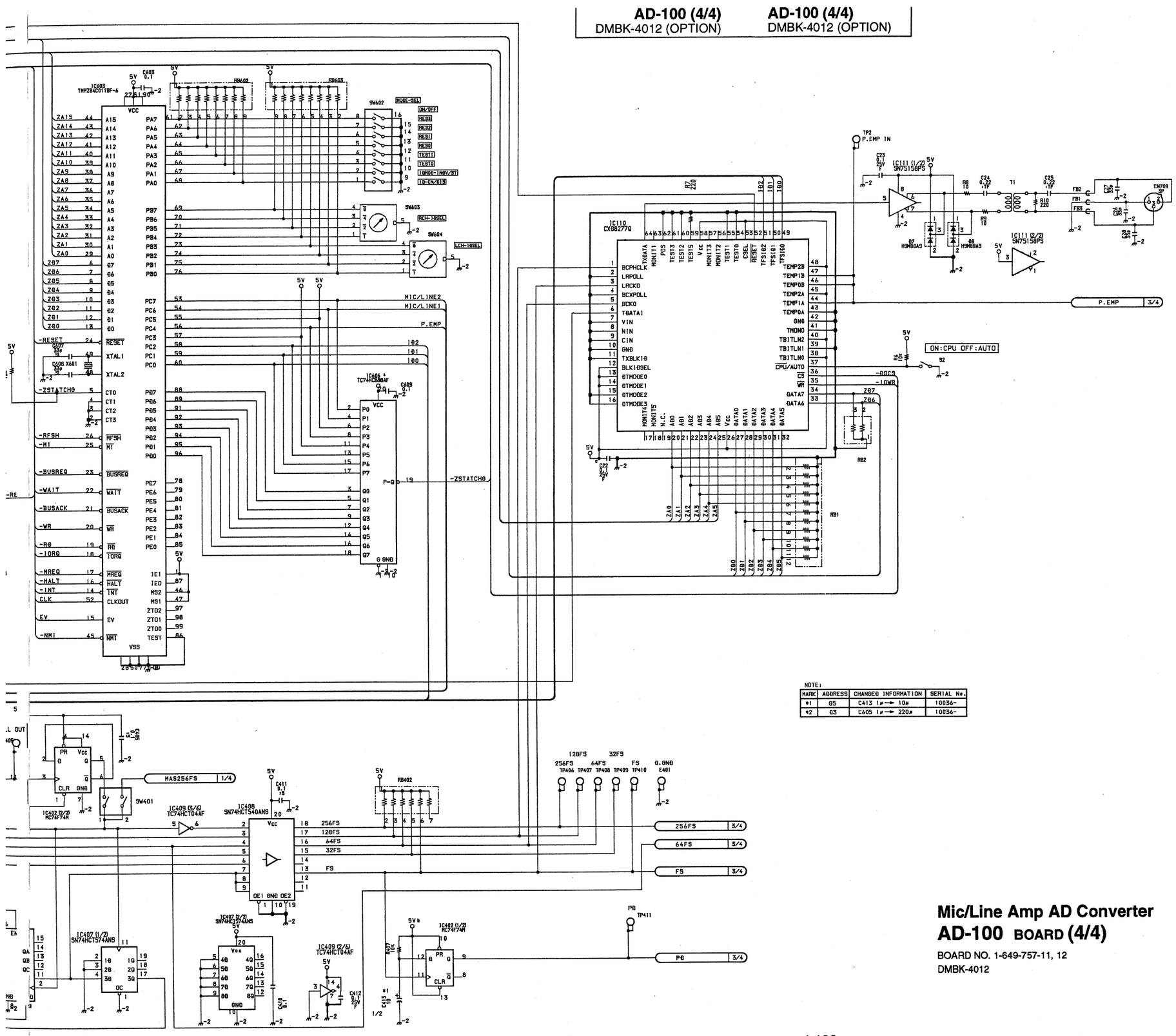

NOTE:

MARK	ADDRESS	CHANGED INFORMATION	SERIAL No.
*1	G5	C413 1μ → 10μ	10036-
*2	G3	C605 1μ → 220μ	10036-

Mic/Line Amp AD Converter
AD-100 BOARD (4/4)

BOARD NO. 1-649-757-11, 12
DMBK-4012

E F G H I J K L

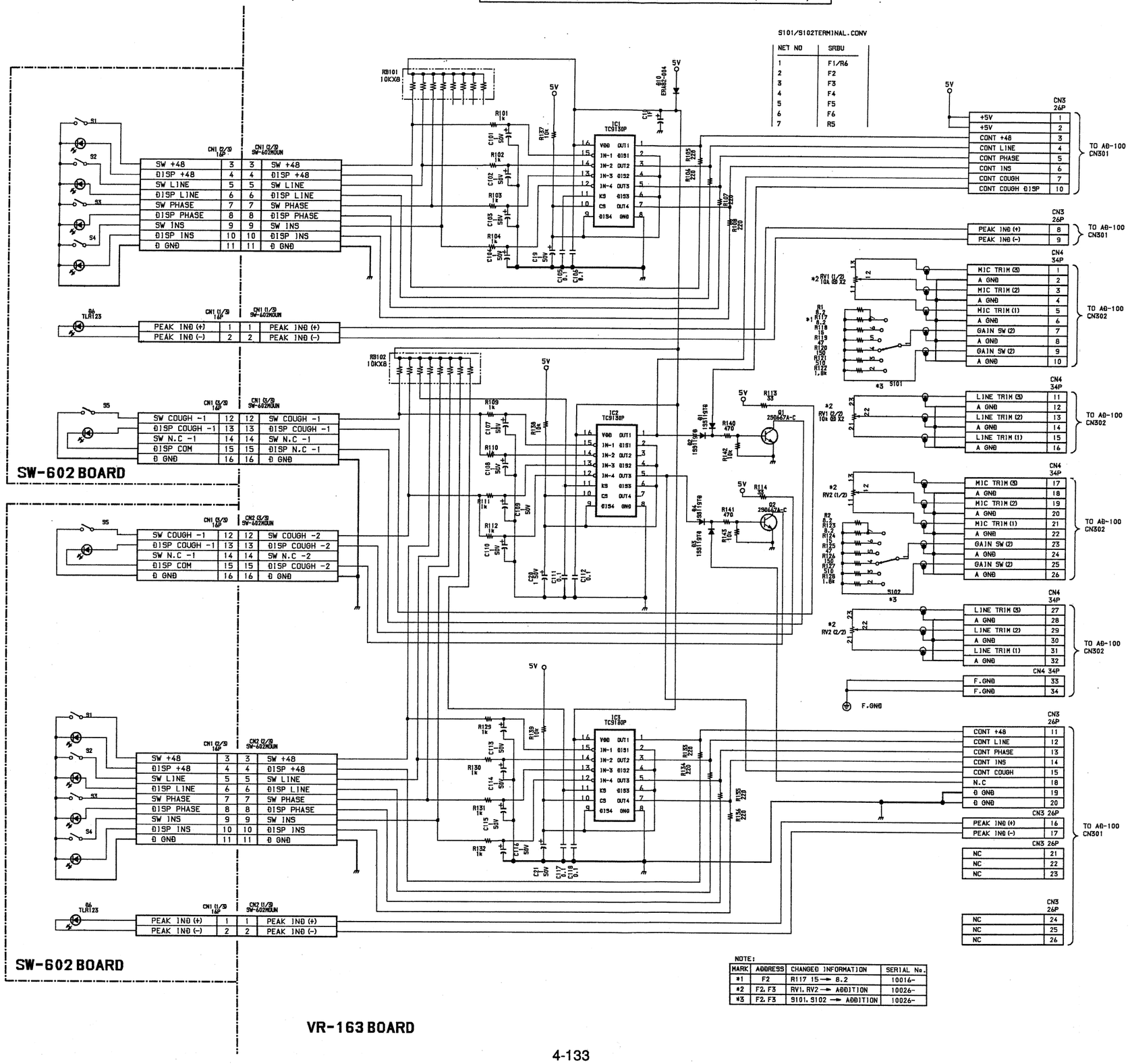

NOTE:

MARK	ADDRESS	CHANGED INFORMATION	SERIAL No.
*1	F2	R117 15 → 8.2	10016-
*2	F2, F3	RV1, RV2 → ADDITION	10026-
*3	F2, F3	S101, S102 → ADDITION	10026-

Volume
VR-163 BOARD
BOARD NO. 1-649-758-11

Switch
SW-602 BOARD
BOARD NO. 1-649-759-11
DMBK-4012

4-133

SECTION 5
SEMICONDUCTOR PIN ASSIGNMENTS

ここに記載されているIC、トランジスタ、ダイオードは、それぞれの機能を等価的に表したものです。したがって互換性を表すものではありません。(互換性のない型名が併記されていることもあります。) 部品の交換をするときは、SPARE PARTSの章を参照してください。等価回路はICメーカーのData Bookに従いました。

ICs, transistors and diodes whose functions are equivalent are described here. Therefore, incompatible device names may be described together. For parts replacement, refer to the Spare Parts section in this manual. The circuit diagram of each IC is obtained from the IC data book published by the manufacturer.

TYPE PAGE

DIODE
10E-1 ····· 5-3
10E-2 ····· 5-3
1SS119 ····· 5-3
1SS119TD ····· 5-3
1SS184 ····· 5-3
ERA82-004 ····· 5-3
ERA85 ····· 5-3
ESAB82-004 ····· 5-3
ESAC33-02C ····· 5-3
ESAC33-02CS ····· 5-3
ESAC33-02N ····· 5-3
ESAD83 ····· 5-3
ESAE83-006 ····· 5-3
FC52M ····· 5-3
GL1HY51 ····· 5-3
HSM88AS ····· 5-3
KV1460 ····· 5-41
RD??ES ····· 5-3
RD??ESB? ····· 5-3
RD??M ····· 5-3
RD??M-B? ····· 5-3
S10SC4M ····· 5-3
S10SC4MR ····· 5-3

LED
GL3E306 ····· 5-41
GL7E202 ····· 5-41
HDSP-8825 ····· 5-3
HLMP2965 ····· 5-4
LN0603GP3 ····· 5-4
TLG114A ····· 5-4
TLG124A ····· 5-4
TLR123 ····· 5-4
TLY114A ····· 5-4
TLY124 ····· 5-4

TYPE PAGE

TRANSISTOR
2SA1015 ····· 5-4
2SB1142 ····· 5-4
2SC1815 ····· 5-4
2SC2383 ····· 5-4
2SC2785 ····· 5-4
2SC2785E ····· 5-4
2SC3668 ····· 5-4
2SC4133 ····· 5-4
2SD1507M ····· 5-41
2SD667A ····· 5-4
2SJ105 ····· 5-4
2SK152 ····· 5-4
2SK30A ····· 5-4
DTC124EF ····· 5-4
DTC124XF ····· 5-4

IC
74AC04SJ ····· 5-5
74AC04SJX ····· 5-5
74AC08PC ····· 5-5
74AC08SJ ····· 5-5
74AC163SJ ····· 5-5
74AC175SJ ····· 5-41
74AC540SJ ····· 5-5
74AC541SJ ····· 5-5
74AC574SJ ····· 5-5
74AC574SJX ····· 5-5
74AC74SJ ····· 5-6
74AC74SJX ····· 5-6
74F00SJ ····· 5-6
74F00SJX ····· 5-6
74F04PC ····· 5-6
74F04SJ ····· 5-41
74F04SJX ····· 5-6
74F139SJ ····· 5-6
74F151ASJ ····· 5-6
74F161ASJ ····· 5-6

TYPE PAGE

74F163ASJ ····· 5-7
74F164ASJ ····· 5-7
74F175SJ ····· 5-7
74F245SJ ····· 5-7
74F245SJX ····· 5-7
74F257ASJ ····· 5-7
74F32PC ····· 5-8
74F32SJ ····· 5-8
74F379SJ ····· 5-8
74F541SJ ····· 5-8
74F574SJ ····· 5-8
AM26LS30PC ····· 5-8
AM26LS31CNS ····· 5-8
AM26LS31PC ····· 5-8
AM26LS32ACNS ····· 5-8
AM26LS32PC ····· 5-8
CX23065A ····· 5-9
CXD1160AQ ····· 5-9
CXD2705AQ ····· 5-10
CXD8014G ····· 5-10
CXD8025Q ····· 5-11
CXD8125Q ····· 5-12
CXD8277Q ····· 5-13
CXD8278AQ ····· 5-14
CXD8307Q ····· 5-12
CXK581000AM-70LL ····· 5-39
DF1760P ····· 5-15
DS1643-150 ····· 5-15
GAL16V8B-10LP ····· 5-16
GAL16V8B-25LP ····· 5-16
GAL22V10-15L ····· 5-16
GAL22V10B-15LP ····· 5-16
HD63265FP ····· 5-16
HD63484CP8 ····· 5-17
HD63487CP ····· 5-18
HM514402BZ-8 ····· 5-19
ICL7665ACSA ····· 5-19
ICL7665SCPA ····· 5-19
LM1881N ····· 5-19

MICONDUCTOR INDEX

TYPE	PAGE
M27C256B-15F1	5-20
M27C4002-10F1	5-20
M27C4002-12F1	5-20
MAX232CWE	5-41
MAX238CNG	5-21
MB8421-90LPFQ	5-21
MB8431-90LPFQ	5-22
MB88346BPF	5-42
MC34051M	5-21
MC34051P	5-21
MC68302FC16	5-23
MC68302FC16C	5-23
MC74F04M	5-6
MC74F04N	5-6
MC74F08M	5-21
MC74F163AM	5-42
MC74F21M	5-21
MC74F245M	5-7
MC74F32M	5-8
MC74F32N	5-8
MC74F74M	5-42
MC74F803N	5-22
MC74HC259N	5-23
MC74HC390F	5-24
MC74HC390N	5-24
MC74HC4075N	5-24
MC74HC540N	5-24
MC74HC74AN	5-6
MC7805CT	5-24
MC7815CT	5-24
MC7915CT	5-24
NE5532P	5-24
NJM7812FA	5-24
NJM7815FA	5-42
NJM78L05A	5-25
NJM7912FA	5-25
NJM7915FA	5-42
NJM79L05A	5-25
PC837	5-42
PCM1760P	5-25
PCM63P-K	5-26
PCM69AP	5-26
RC4558P	5-26
SM5813APT	5-26
SM583AP1	5-27
SM5842APT	5-27
SN74HC00AN	5-27
SN74HC00ANS	5-27
SN74HC02ANS	5-28
SN74HC04AN	5-5
SN74HC04ANS	5-5
SN74HC08ANS	5-5
SN74HC10AN	5-28

TYPE	PAGE
SN74HC125ANS	5-28
SN74HC126ANS	5-28
SN74HC132ANS	5-28
SN74HC138ANS	5-28
SN74HC139ANS	5-28
SN74HC14AN	5-29
SN74HC14ANS	5-29
SN74HC151ANS	5-29
SN74HC153ANS	5-29
SN74HC157ANS	5-29
SN74HC163AN	5-5
SN74HC163ANS	5-5
SN74HC164ANS	5-29
SN74HC165ANS	5-30
SN74HC21ANS	5-30
SN74HC240ANS	5-30
SN74HC245AN	5-30
SN74HC245ANS	5-30
SN74HC251ANS	5-31
SN74HC259AN	5-23
SN74HC259ANS	5-23
SN74HC27AN	5-31
SN74HC32ANS	5-31
SN74HC365ANS	5-31
SN74HC377ANS	5-31
SN74HC393ANS	5-31
SN74HC4040ANS	5-32
SN74HC4075AN	5-24
SN74HC51NS	5-43
SN74HC540AN	5-24
SN74HC540ANS	5-24
SN74HC541AN	5-5
SN74HC541ANS	5-5
SN74HC574AN	5-5
SN74HC574ANS	5-5
SN74HC74AN	5-6
SN74HC74ANS	5-6
SN74HCT541AN	5-5
SN74LS00NS	5-6
SN74LS145NS	5-32
SN74LS14NS	5-32
SN74LS156NS	5-32
SN74LS540NS	5-5
SN74LS624NS	5-32
SN75123N	5-32
SN75123NS	5-32
SN75124N	5-33
SN75124NS	5-33
SN75158PS	5-33
SSM-2017P	5-33
SSM-2142P	5-33
TA7805S	5-33
TA7812S	5-33

TYPE	PAGE
TA7815S	5-33
TA79005S	5-24
TA79015S	5-24
TC4011UBP	5-33
TC514256BZ-60	5-33
TC74AC04F	5-43
TC74AC175F	5-34
TC74AC175P	5-34
TC74HC07AF	5-34
TC74HC07AP	5-34
TC74HC123AF	5-34
TC74HC123AP	5-34
TC74HC21AF	5-30
TC74HC238AF	5-34
TC74HC377AF	5-31
TC74HC390P	5-24
TC74HC4028AF	5-34
TC74HC4028F	5-43
TC74HC4072AP	5-34
TC74HC688AF	5-35
TC9130P	5-35
TD62381F	5-35
TD62381P	5-35
TD62783AF	5-35
TD62783F	5-35
TL062CP	5-35
TL072CPS	5-35
TL082ACP	5-35
TL082CP	5-35
TL084CN	5-35
TL7705ACP	5-36
TL7705ACPS	5-36
TMP82C79M-2	5-36
TMPZ84C011BF-6	5-37
TMPZ84C015BF-6	5-38
TMS27C210A-12JL	5-36
UPC1238H	5-39
UPC4558C	5-26
UPC7805H	5-24
UPC814C	5-39
UPD431000AGW-10LL	5-39
UPD431000AGW-70L	5-39
UPD431000AGW-70LL	5-39
UPD43256AGU-10L	5-40
UPD43256AGU-10LL	5-40
UPD43256AGU-12L	5-40
UPD4702G	5-43
UPD4704G	5-43
UPD5201C	5-40
UPD7004C	5-40

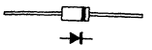

10E-1
10E-2
1SS119
1SS119TD
ERA85

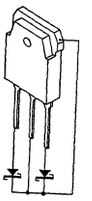

ESAD83

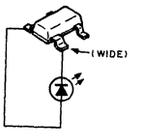

GL1HY51 ; YELLOW

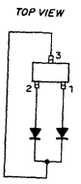

1SS184

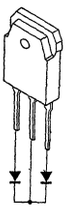

ESAE83-006

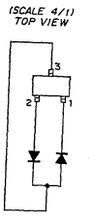

HSM88AS

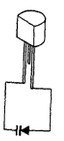

FC52M

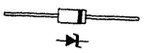

RD ? ?ES
RD ? ?ESB ?

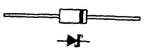

ERA82-004

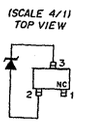

RD ?? M
RD ?? M-B ?

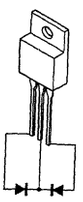

ESAB82-004
ESAC33-02C
ESAC33-02CS
S10SC4M

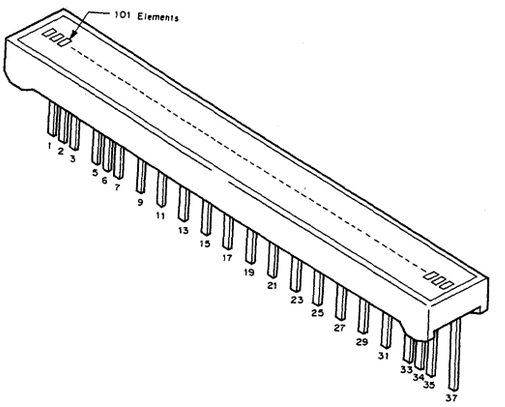

HDSP-8825 ; RED

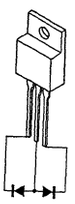

ESAC33-02N
S10SC4MR

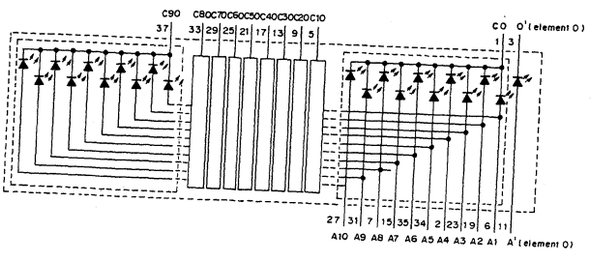

A1 to A10 : Common Anode
C0 to C90 : Common Cathode

ED, TRANSISTOR

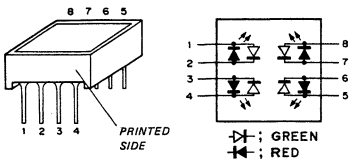

HLMP2965

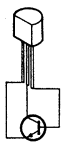

2SC1815

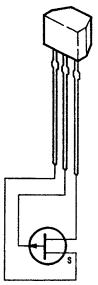

2SJ105

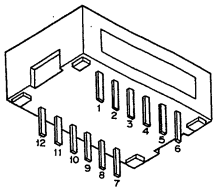

LN0603GP3 ; GREEN

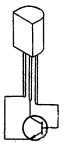

2SC2383
2SD667A

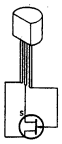

2SK152

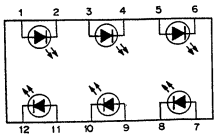

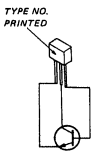

2SC2785
2SC2785E

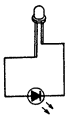

TLG114A ; GREEN
TLG124A ; GREEN
TLR123 ; RED
TLY114A ; YELLOW
TLY124 ; YELLOW

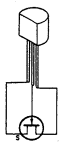

2SK30A

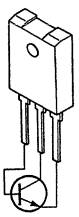

2SC3668

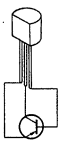

2SA1015

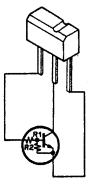

DTC124EF (R1 = 22K, R2 = 22K)

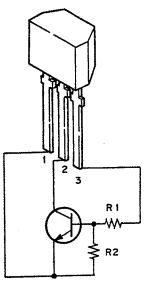

2SC4133

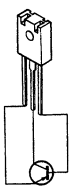

2SB1142

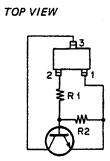

DTC124XF (R1 = 22K, R2 = 47K)

74AC04SJ (NS) FLAT PACKAGE
74AC04SJX (NS)
SN74HC04AN (TI)
SN74HC04ANS (TI) FLAT PACKAGE

C-MOS HEX INVERTERS
– TOP VIEW –

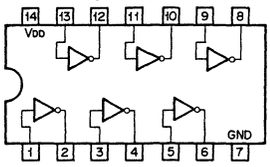

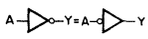

$Y = \overline{A}$

A	Y
0	1
1	0

0 ; LOW LEVEL
1 ; HIGH LEVEL

NOTE :

TYPE	VDD
74HCT04 TYPE	+ 5V
TC74AC04 TYPE TC74VHC04 TYPE	+ 2 to + 5.5V
74ACT04 TYPE	+ 4.5 to + 5.5V
OTHER TYPES	+ 2 to + 6V

74AC08PC (NS)
74AC08SJ (NS) FLAT PACKAGE
SN74HC08ANS (TI) FLAT PACKAGE

C-MOS QUAD 2-INPUT AND GATES
– TOP VIEW –

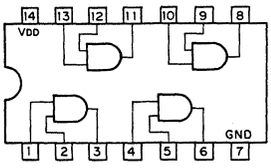

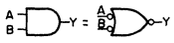

$Y = A \cdot B = \overline{\overline{A} + \overline{B}}$

A	B	Y
0	0	0
0	1	0
1	0	0
1	1	1

0 ; LOW LEVEL
1 ; HIGH LEVEL

NOTE :

TYPE	VDD
TC74AC08F MC74ACT08M	+ 2 to + 5.5V
TC40H	+ 2 to + 8V
OTHER TYPES	+ 2 to + 6V

74AC163SJ (NS)
SN74HC163AN (TI)
SN74HC163ANS (TI) FLAT PACKAGE

C-MOS PRESETTABLE SYNCHRONOUS 4-BIT BINARY COUNTER
– TOP VIEW –

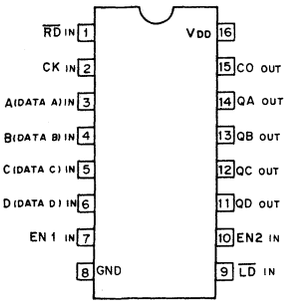

MODE SELECTION

CONTROL INPUTS				MODE
RD	LD	EN1	EN2	
0	X	X	X	RESET (SYNCHRONOUS)
1	0	X	X	PRESET (SYNCHRONOUS)
1	1	0	X	NO COUNT
1	1	X	0	NO COUNT
1	1	1	1	COUNT

CARRY OUTPUT "CO"

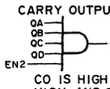

CO IS HIGH WHEN EN2 INPUT IS HIGH AND COUNT IS "15".

NOTE :

TYPE	VDD
74ACT163 TYPE IDT74FCT163 TYPE	+ 5V
TC74AC163 TYPE	+ 2 to + 5.5V
OTHER TYPES	+ 2 to + 6V

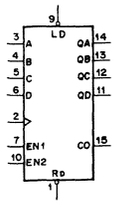

COUNT SEQUENCE

COUNT	OUTPUTS			
	QD	QC	QB	QA
0	0	0	0	0
1	0	0	0	1
2	0	0	1	0
3	0	0	1	1
4	0	1	0	0
5	0	1	0	1
6	0	1	1	0
7	0	1	1	1
8	1	0	0	0
9	1	0	0	1
10	1	0	1	0
11	1	0	1	1
12	1	1	0	0
13	1	1	0	1
14	1	1	1	0
15	1	1	1	1

74AC540SJ (NS) FLAT PACKAGE
SN74LS540NS (TI) FLAT PACKAGE

TTL OCTAL LINE BUFFERS/DRIVERS WITH 3-STATE OUTPUTS
– TOP VIEW –

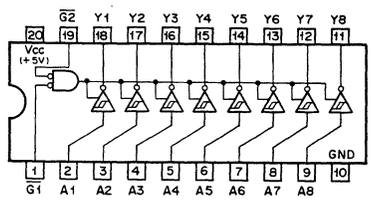

G1	G2	A	Y
0	0	0	1
0	0	1	0
1	X	X	HI-Z
X	1	X	HI-Z

0 ; LOW LEVEL
1 ; HIGH LEVEL
X ; DON'T CARE
HI-Z ; HIGH IMPEDANCE

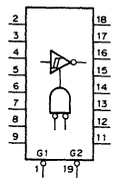

74AC541SJ (NS) FLAT PACKAGE
SN74HC541AN (TI)
SN74HC541ANS (TI) FLAT PACKAGE
SN74HCT541AN (TI)

C-MOS BUFFERS AND LINE DRIVERS WITH 3-STATE OUTPUTS
– TOP VIEW –

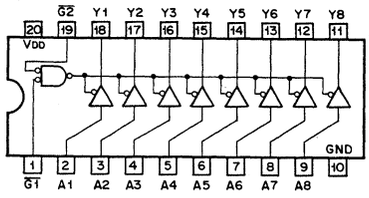

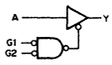

G1	G2	A	Y
0	0	0	0
0	0	1	1
1	X	X	HI-Z
X	1	X	HI-Z

0 ; LOW LEVEL
1 ; HIGH LEVEL
X ; DON'T CARE
HI-Z ; HIGH IMPEDANCE

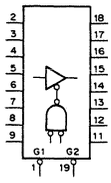

NOTE :

TYPE	VDD
AC/VHC	+2 to +5.5V
HC	+2 to +6V
ACT/BCT/HCT	+5V

74AC574SJ (NS) FLAT PACKAGE
74AC574SJX (NS)
SN74HC574AN (TI)
SN74HC574ANS (TI) FLAT PACKAGE

C-MOS 3-STATE D-TYPE EDGE-TRIGGERED FLIP-FLOP
– TOP VIEW –

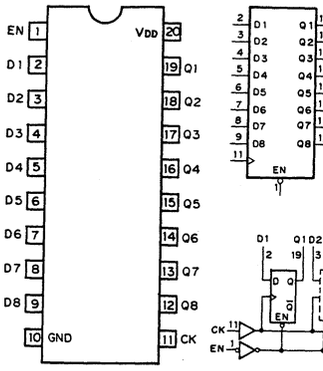

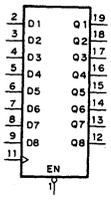

EACH FLIP-FLOP

INPUTS			OUT
EN	CK	D	Q
0	↑	1	1
0	↑	0	0
0	↓	X	Q_0
1	X	X	HI-Z

0 ; LOW LEVEL
1 ; HIGH LEVEL
X ; DON'T CARE
HI-Z ; HIGH IMPEDANCE
Q_0 ; NO CHANGE

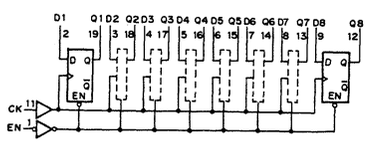

NOTE :

TYPE	VDD
74AC/74HC	+ 2 to + 6V
74ACT/74FCT /74HCT	+ 5V
TC74AC574F TC74VHC574	+ 2 to + 5.5V

74AC74SJ (NS) FLAT PACKAGE
74AC74SJX (NS)
MC74HC74AN (MOTOROLA)
SN74HC74AN (TI)
SN74HC74ANS (TI) FLAT PACKAGE

C-MOS DUAL D-TYPE FLIP-FLOPS WITH DIRECT SET/RESET
– TOP VIEW –

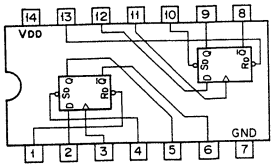

INPUTS				OUTPUTS	
$\overline{Sd}$	$\overline{Rd}$	CK	D	Qn+1	$\overline{Qn+1}$
0	1	X	X	1	0
1	0	X	X	0	1
0	0	X	X	1	1
1	1	↑	1	1	0
1	1	↑	0	0	1
1	1	0	X	Qn	$\overline{Qn}$

0 ; LOW LEVEL
1 ; HIGH LEVEL
X ; DON'T CARE

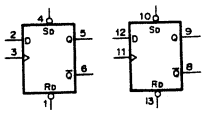

NOTE :

TYPE	VDD
TC74HCT74AF	+5V
TC74AC74 TYPE	+2 to +5.5V
74ACT74 TYPE	+4.5 to +5.5V
OTHER TYPES	+2 to +6V

74F00SJ (NS) FLAT PACKAGE
74F00SJX (NS)
SN74LS00NS (TI)

TTL 2-INPUT POSITIVE-NAND GATE
– TOP VIEW –

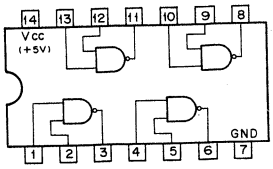

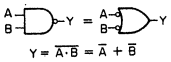

$Y = \overline{A \cdot B} = \overline{A} + \overline{B}$

A	B	Y
0	0	1
0	1	1
1	0	1
1	1	0

0 ; LOW LEVEL
1 ; HIGH LEVEL

74F04PC (NS)
74F04SJX (NS)
MC74F04M (MOTOROLA)
MC74F04N (MOTOROLA)

TTL INVERTER
– TOP VIEW –

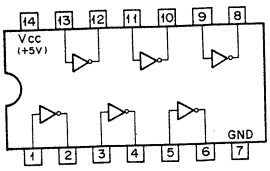

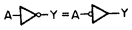

$Y = \overline{A}$

A	Y
0	1
1	0

0 ; LOW LEVEL
1 ; HIGH LEVEL

74F139SJ (NS) FLAT PACKAGE

TTL 2-TO-4-LINE DECODER/DEMULTIPLEXER
– TOP VIEW –

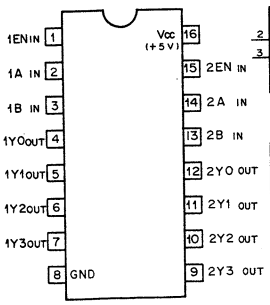

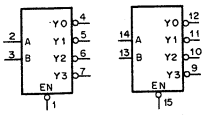

INPUTS			OUTPUTS			
EN	B	A	Y3	Y2	Y1	Y0
0	0	0	1	1	1	0
0	0	1	1	1	0	1
0	1	0	1	0	1	1
0	1	1	0	1	1	1
1	X	X	1	1	1	1

0 ; LOW LEVEL
1 ; HIGH LEVEL
X ; DON'T CARE

74F151ASJ (FSC)

TTL 8-LINE-TO-1-LINE DATA SELECTOR/MULTIPLEXER
– TOP VIEW –

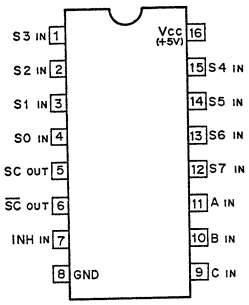

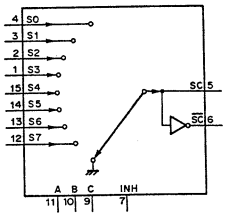

CONTROL INPUTS				ON CHANNEL
INH	C	B	A	
0	0	0	0	0
0	0	0	1	1
0	0	1	0	2
0	0	1	1	3
0	1	0	0	4
0	1	0	1	5
0	1	1	0	6
0	1	1	1	7
1	X	X	X	GND

0 ; LOW LEVEL
1 ; HIGH LEVEL
X ; DON'T CARE

74F161ASJ (FSC)

TTL PRESETTABLE SYNCHRONOUS 4-BIT BINARY COUNTER
– TOP VIEW –

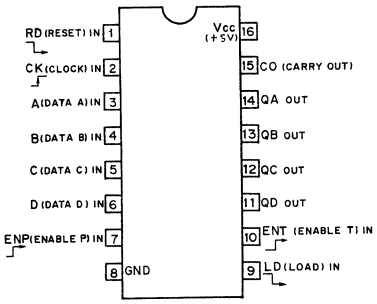

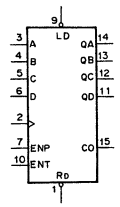

MODE SELECTION

CONTROL INPUTS				MODE
Rd	LD	ENP	ENT	
0	X	X	X	RESET (ASYNCHRONOUS)
1	0	X	X	PRESET (SYNCHRONOUS)
1	1	0	X	NO COUNT
1	1	X	0	NO COUNT
1	1	1	1	COUNT

0 ; LOW LEVEL
1 ; HIGH LEVEL
X ; DON'T CARE

CARRY OUTPUT "CO"

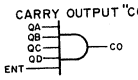

CO IS HIGH WHEN ENT INPUT IS HIGH AND COUNT IS "15".

COUNT SEQUENCE

COUNT	OUTPUTS			
	QD	QC	QB	QA
0	0	0	0	0
1	0	0	0	1
2	0	0	1	0
3	0	0	1	1
4	0	1	0	0
5	0	1	0	1
6	0	1	1	0
7	0	1	1	1
8	1	0	0	0
9	1	0	0	1
10	1	0	1	0
11	1	0	1	1
12	1	1	0	0
13	1	1	0	1
14	1	1	1	0
15	1	1	1	1

74F163ASJ (NS) FLAT PACKAGE

TTL PRESETTABLE SYNCHRONOUS 4-BIT BINARY COUNTER
– TOP VIEW –

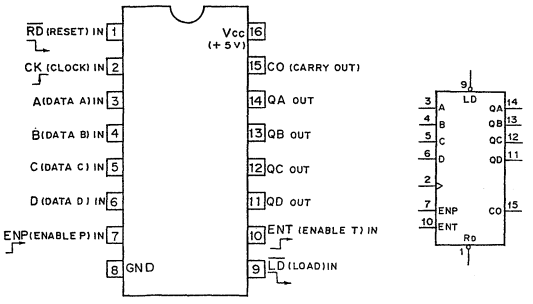

MODE SELECTION

CONTROL INPUTS				MODE
RD	LD	ENP	ENT	
0	X	X	X	RESET (SYNCHRONOUS)
1	0	X	X	PRESET (SYNCHRONOUS)
1	1	0	X	NO COUNT
1	1	X	0	NO COUNT
1	1	1	1	COUNT

0; LOW LEVEL
1; HIGH LEVEL
X; DON'T CARE

COUNT SEQUENCE

COUNT	OUTPUTS			
	QD	QC	QB	QA
0	0	0	0	0
1	0	0	0	1
2	0	0	1	0
3	0	0	1	1
4	0	1	0	0
5	0	1	0	1
6	0	1	1	0
7	0	1	1	1
8	1	0	0	0
9	1	0	0	1
10	1	0	1	0
11	1	0	1	1
12	1	1	0	0
13	1	1	0	1
14	1	1	1	0
15	1	1	1	1

CARRY OUTPUT "CO"

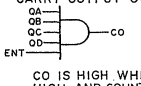

CO IS HIGH WHEN ENT INPUT IS HIGH AND COUNT IS "15".

74F164ASJ (NS)

TTL 8-BIT PARALLEL-OUT SERIAL SHIFT REGISTER
– TOP VIEW –

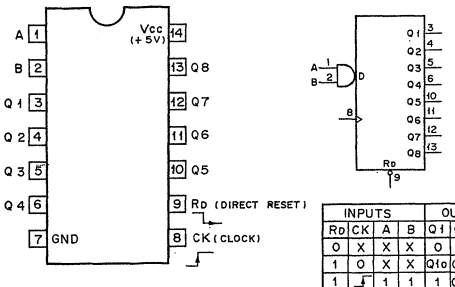

INPUTS				OUTPUTS			
RD	CK	A	B	Q1	Q2	----	Q8
0	X	X	X	0	0	0	0
1	0	X	X	Q1o	Q2o	----	Q8o
1	↑	1	1	1	Q1n	----	Q7n
1	↑	0	X	0	Q1n	----	Q7n
1	↑	X	0	0	Q1n	----	Q7n

0; LOW LEVEL
1; HIGH LEVEL
X; DON'T CARE

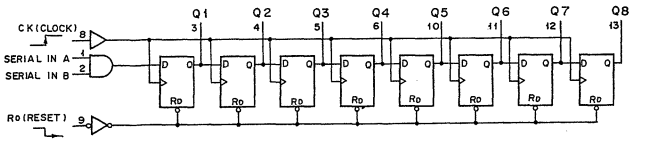

74F175SJ (NS) FLAT PACKAGE

TTL D-TYPE FLIP-FLOP WITH CLEAR
– TOP VIEW –

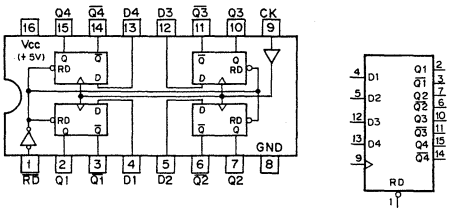

RD	CK	D	Q	Q̄
0	X	X	0	1
1	↑	1	1	0
1	↑	0	0	1
1	0	X	Qo	Q̄o

0; LOW LEVEL
1; HIGH LEVEL
X; DON'T CARE

74F245SJ (NS) FLAT PACKAGE
74F245SJX (NS)
MC74F245M (MOTOROLA) FLAT PACKAGE

TTL BILATERAL SCHMITT TRIGGER BUS TRANSCEIVERS WITH 3-STATE OUTPUTS
– TOP VIEW –

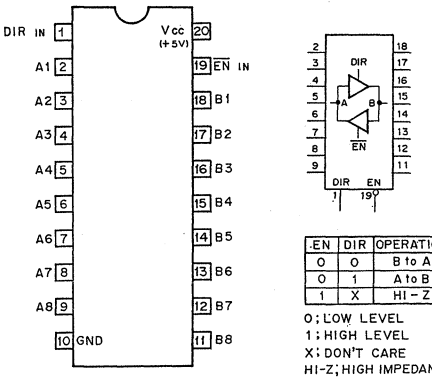

EN	DIR	OPERATION
0	0	B to A
0	1	A to B
1	X	HI-Z

0; LOW LEVEL
1; HIGH LEVEL
X; DON'T CARE
HI-Z; HIGH IMPEDANCE

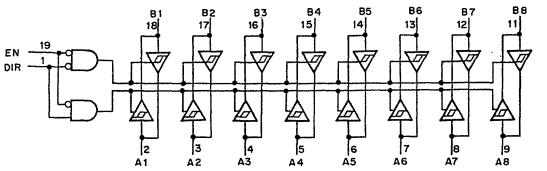

74F257ASJ (NS) FLAT PACKAGE

TTL 2-LINE-TO-1-LINE DATA SELECTOR/MULTIPLEXER
– TOP VIEW –

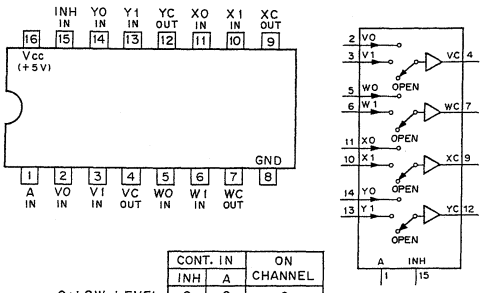

CONT. IN		ON CHANNEL
INH	A	
0	0	0
0	1	1
1	X	OPEN

0; LOW LEVEL
1; HIGH LEVEL
X; DON'T CARE

74F32PC (NS)
74F32SJ (NS)
MC74F32M (MOTOROLA)
MC74F32N (MOTOROLA)

TTL 2-INPUT POSITIVE-OR GATE
– TOP VIEW –

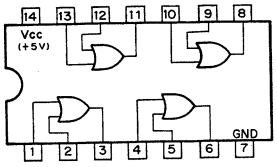

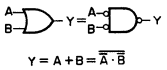

A	B	Y
0	0	0
0	1	1
1	0	1
1	1	1

0 ; LOW LEVEL
1 ; HIGH LEVEL

74F379SJ (NS)

TTL QUAD D-TYPE FLIP-FLOP WITH ENABLE
– TOP VIEW –

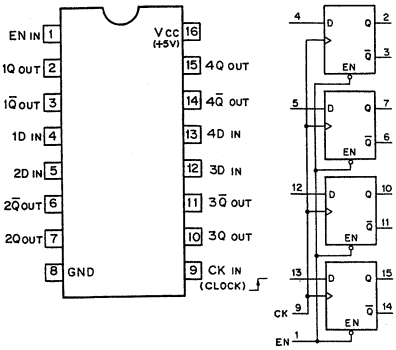

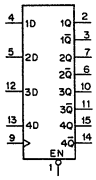

EACH FLIP-FLOP

INPUTS			OUT	
EN	CK	D	Q	$\overline{Q}$
1	X	X	Qo	$\overline{Q}$o
0	↑	1	1	0
0	↑	0	0	1
X	0	X	Qo	$\overline{Q}$o

74F541SJ (NS) FLAT PACKAGE

TTL BUFFERS AND LINE DRIVERS WITH 3-STATE OUTPUTS
– TOP VIEW –

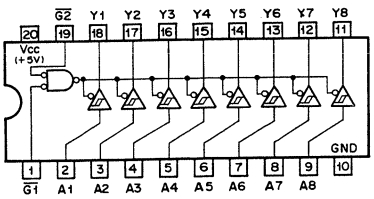

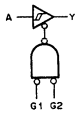

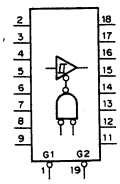

G1	G2	A	Y
0	0	0	0
0	0	1	1
1	X	X	HI-Z
X	1	X	HI-Z

0 ; LOW LEVEL
1 ; HIGH LEVEL
X ; DON'T CARE
HI-Z ; HIGH IMPEDANCE

74F574SJ (NS) FLAT PACKAGE

TTL 3-STATE D-TYPE EDGE-TRIGGERED FLIP-FLOP
– TOP VIEW –

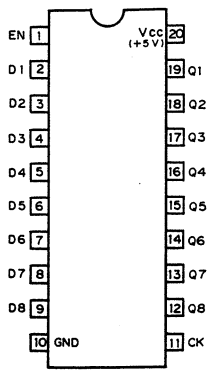

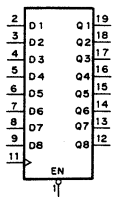

EACH FLIP-FLOP

INPUTS			OUT
EN	CK	D	Q
0	↑	1	1
0	↑	0	0
0	0	X	Qo
1	X	X	HI-Z

0 ; LOW LEVEL
1 ; HIGH LEVEL
X ; DON'T CARE
HI-Z ; HIGH IMPEDANCE
Qo ; NO CHANGE

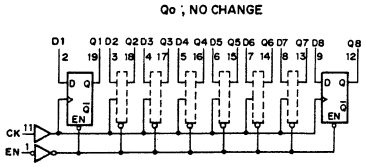

AM26LS30PC (ADVANCE MICRO DEVICES)

LINE DRIVER
– TOP VIEW –

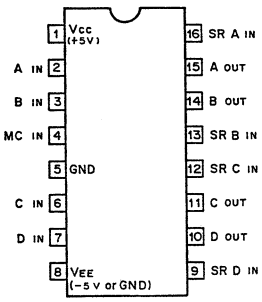

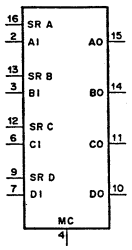

MC ; MODE CONTROL
SR ; SLEW RATE CONTROL

MC=1

MC=0

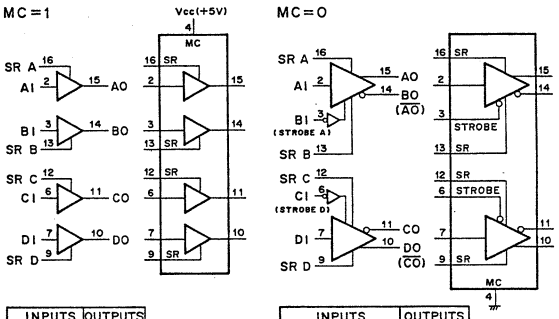

INPUTS		OUTPUTS	
MC	A TO D	A TO D	
1	0	0	
1	1	1	

0 ; LOW LEVEL
1 ; HIGH LEVEL
X ; DON'T CARE
HI-Z ; HIGH IMPEDANCE

INPUTS			OUTPUTS	
MC	STROBE	A & D	A & D	B & C
0	0	0	0	1
0	0	1	1	0
0	1	X	HI-Z	HI-Z

AM26LS31CNS (TI) FLAT PACKAGE
AM26LS31PC (ADVANCE MICRO DEVICES)

HIGH SPEED DIFFERENTIAL LINE DRIVER
– TOP VIEW –

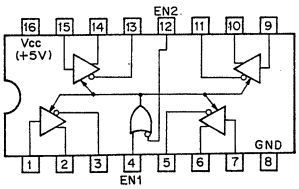

FUNCTION TABLE

EN2	EN1	OUTPUT
0	0	ENABLE
0	1	ENABLE
1	0	HI-Z
1	1	ENABLE

0 ; LOW LEVEL
1 ; HIGH LEVEL
HI-Z ; HIGH IMPEDANCE

AM26LS32ACNS (TI) FLAT PACKAGE
AM26LS32PC (ADVANCE MICRO DEVICES)

HIGH SPEED DIFFERENTIAL LINE RECEIVER
– TOP VIEW –

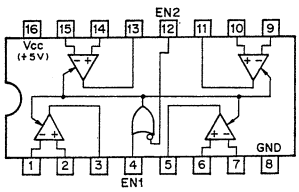

FUNCTION TABLE

EN2	EN1	OUTPUT
0	0	ENABLE
0	1	ENABLE
1	0	HI-Z
1	1	ENABLE

0 ; LOW LEVEL
1 ; HIGH LEVEL
HI-Z ; HIGH IMPEDANCE

	SENSE	INPUT VOLT
LS32	±200mV	±7V
LS33	±500mV	±15V

CXD1160AQ (SONY)

C-MOS DIGITAL AUDIO SIGNAL PROCESSOR
– TOP VIEW –

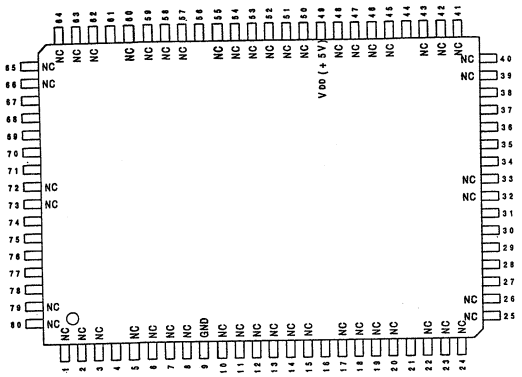

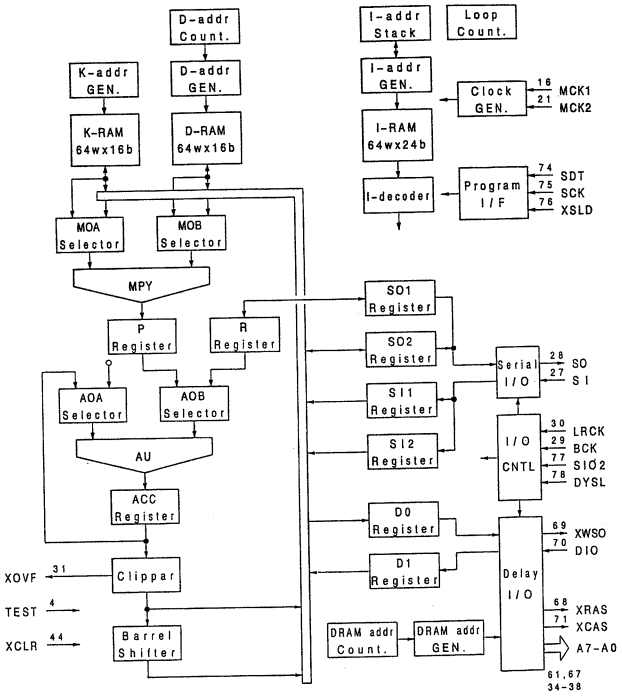

PIN NO.	I/O	SYMBOL	PIN NO.	I/O	SYMBOL	PIN NO.	I/O	SYMBOL	PIN NO.	I/O	SYMBOL
1	–	NC	21	I	MCK2	41	–	NC	61	O	A2
2	–	NC	22	–	NC	42	–	NC	62	–	NC
3	–	NC	23	–	NC	43	–	NC	63	–	NC
4	I	TST	24	–	NC	44	I	XCLR	64	–	NC
5	–	NC	25	–	NC	45	–	NC	65	–	NC
6	–	NC	26	–	NC	46	–	NC	66	–	NC
7	–	NC	27	I	SI	47	–	NC	67	O	A0
8	–	NC	28	O	SO	48	–	NC	68	O	XRAS
9	–	GND	29	I	BCK	49	–	VDD(+5V)	69	O	XWSO
10	–	NC	30	I	LRCK	50	–	NC	70	I/O	DIO
11	–	NC	31	O	XOVF	51	–	NC	71	O	XCAS
12	–	NC	32	–	NC	52	–	NC	72	–	NC
13	–	NC	33	–	NC	53	–	NC	73	–	NC
14	–	NC	34	O	A6	54	–	NC	74	I	SDT
15	–	NC	35	O	A3	55	–	NC	75	I	SCK
16	I	MCK1	36	O	A4	56	O	A1	76	I	XSLD
17	–	NC	37	O	A5	57	–	NC	77	I	SIO2
18	–	NC	38	O	A7	58	–	NC	78	I	DYSL
19	–	NC	39	–	NC	59	–	NC	79	–	NC
20	–	NC	40	–	NC	60	–	NC	80	–	NC

INPUT

BCK ;SERIAL BIT CLOCK FOR SERIAL INPUT DATA (SI) AND SERIAL OUTPUT DATA (SO)
DYSL ;DELAY I/O MODE SELECT
LRCK ;SAMPLING FREQ. CLOCK
MCK1 ;MASTER CLOCK 1
MCK2 ;MASTER CLOCK 2
SCK ;SERIAL CLOCK FOR SDT
SDT ;SERIAL DATA FROM CPU
SI ;SERIAL DATA (2' s COMPLEMENT)
SIO2 ;BCK CLOCK MODE SELECT (L (GND):32 BIT CLOCK MODE, H (+5V):24 BIT CLOCK MODE)
TST ;FOR TEST
XCLR ;FOR TEST
XSLD ;LATCH FOR SDT(SERIAL DATA) ACTIVE LOW

OUTPUT

A0-A7 ;ADDRESS FOR EXT.DRAM
SO ;SERIAL DATA (2' s COMPLEMENT)
XCAS ;COLUMN ADDRESS STROBE FOR EXT.DRAM
XOVF ;OVERFLOW DETECT
XRAS ;ROW ADDRESS STROBE FOR EXT.DRAM

INPUT/OUTPUT

DIO ;SERIAL DATA INPUT(DYSL=L) OR DATA INPUT/OUTPUT FOR EXT.DRAM (DYSL=H)

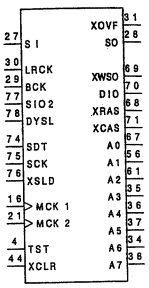

CX23065A (SONY)

N-MOS PHASE COMPARATOR WITH INVERSION AMPLIFIER
– PRINTED SIDE VIEW –

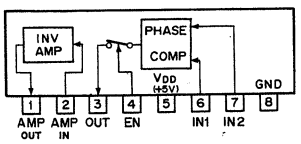

EN	OUT
1	ACTIVE
O	HIGH IMPEDANCE

1; HIGH LEVEL
O; LOW LEVEL

TIMING CHART

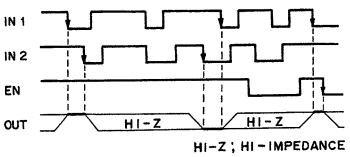

HI-Z ; HI-IMPEDANCE

CXD2705AQ (SONY) FLAT PACKAGE

C-MOS DIGITAL AUDIO SIGNAL PROCESSOR

– TOP VIEW –

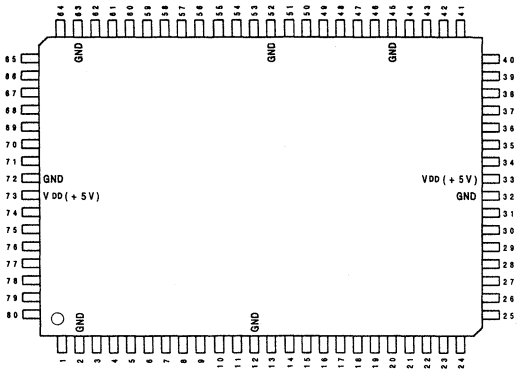

PIN NO.	I/O	SYMBOL	PIN NO.	I/O	SYMBOL	PIN NO.	I/O	SYMBOL	PIN NO.	I/O	SYMBOL
1	O	EA0	21	O	TRDT	41	I	LRK0	61	I/O	ED8
2	–	GND	22	I	RVDT	42	I	LRK1	62	I/O	ED9
3	O	EA1	23	I	SCK	43	I	BCK0	63	–	GND
4	O	EA2	24	I	XLAT	44	I	BCK1	64	I/O	ED10(GND)
5	O	EA3	25	I	TA5	45	–	GND	65	I/O	ED11(GND)
6	O	EA4	26	I	TA4	46	O	D2BK	66	O	XOE
7	O	EA5	27	O	BFOT	47	O	D2LR	67	O	CAS
8	O	EA6	28	O	CLKO	48	O	D4BK	68	I/O	ED12
9	O	EA7	29	I	CLKI	49	O	D4LR	69	I/O	ED13
10	O	EA8	30	I	TA3	50	I/O	ED0	70	I	TD15
11	I	TA7	31	I	TA2	51	I	TST1	71	I	TD14
12	–	GND	32	–	GND	52	–	GND	72	–	GND
13	I	TA6	33	–	VDD(+5V)	53	I	TST0	73	–	VDD(+5V)
14	I	XRST	34	I	TA1	54	I/O	ED1	74	I	TD13
15	O	SP0	35	I	TA0	55	I/O	ED2	75	I	TD12
16	O	SP1	36	O	SOC	56	I/O	ED3	76	I/O	ED14
17	O	SP2	37	O	SOB	57	I/O	ED4	77	I/O	ED15
18	O	MOVF	38	O	SOA	58	I/O	ED5	78	O	XWE
19	O	AOVF	39	O	SIB	59	I/O	ED6	79	O	RAS
20	O	REDY	40	O	SIA	60	I/O	ED7	80	O	EA9

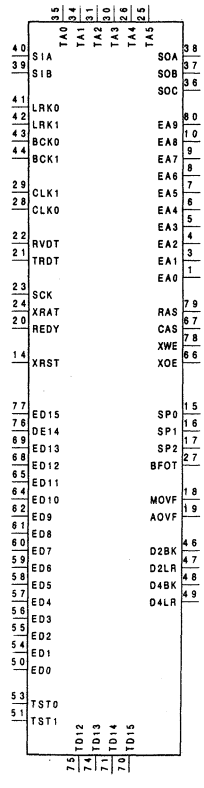

INPUT

BCK0,BCK1 ;BIT CLOCK
CLKI ;CLOCK
LRK0,LRK1 ;LR CLOCK
RVDT ;DATA FOR HC I/F
SCK ;SIFT CLOCK FOR HC I/F
SIA,SIB ;SERIAL DATA
TA0-TA7 ;TEST
TD12-TD15 ;TEST
TST0,TST1 ;TEST(NORMAL "L")
XLAT ;MODE PARTITION SIGNAL
XRST ;RESET

OUTPUT

AOVF ;ALU OVERFLOW SIGNAL
BFOT ;CLOCK BUFFER
CAS ;COLUMN-ADDRESS STROBE FOR EXT. DATA RAM
CLKO ;CLOCK
D2BK ;1/2 BIT CLOCK
D2LR ;1/2 LR CLOCK
D4BK ;1/4 BIT CLOCK
D4LR ;1/4 LR CLOCK
EA0-EA9 ;ADDRESS FOR EXT. DATA RAM
MOVF ;MAC OVERFLOW SIGNAL
RAS ;ROW-ADDRESS STROBE FOR EXT. DATA RAM
REDY ;READY SIGNAL FOR HC I/F
SOA-SOC ;SERIAL DATA
SP0-SP2 ;STATIC PORT 0,1,2
TRDT ;DATA FOR HC I/F
XOE ;OUTPUT ENABLE FOR EXT. DATA RAM
XWE ;WRITE ENABLE FOR EXT. DATA RAM

INPUT/OUTPUT

ED0-ED15 ;DATA INPUT/OUTPUT FOR EXT. DATA RAM

CXD8014G (SONY)

32 × 32 MATRIX SWITCH

– BOTTOM VIEW –

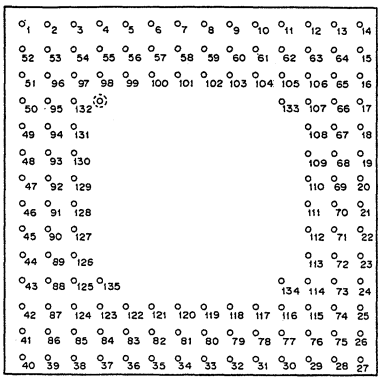

(VDD = 5V)

PIN NO.	I/O	SYMBOL	PIN NO.	I/O	SYMBOL	PIN NO.	I/O	SYMBOL	PIN NO.	I/O	SYMBOL	PIN NO.	I/O	SYMBOL
1	I	IN19	28	I	IN10	55	O	O21	82	O	O7	109	–	NC
2	I	IN20	29	O	SO12	56	O	O22	83	O	O6	110	–	GND
3	O	SO20	30	O	SO13	57	O	O23	84	O	O5	111	–	VDD
4	O	SO21	31	O	SO14	58	I	IN23	85	O	O4	112	I	A3
5	O	SO22	32	O	SO15	59	I	IN25	86	I	IN5	113	I	A4
6	O	SO23	33	I	IN8	60	O	O31	87	O	O3	114	–	GND
7	I	IN22	34	I	IN6	61	O	O30	88	O	O2	115	I	WT
8	I	IN24	35	O	SO7	62	O	O29	89	O	O1	116	–	NC
9	O	SO31	36	O	SO6	63	O	O28	90	O	O0	117	–	NC
10	O	SO30	37	O	SO5	64	I	IN29	91	I	IN1	118	–	NC
11	O	SO29	38	O	SO4	65	O	O27	92	I	IN7	119	–	GND
12	O	SO28	39	I	IN4	66	O	O26	93	O	O16	120	–	VDD
13	I	IN26	40	I	IN3	67	O	O25	94	O	O17	121	I	D5
14	I	IN27	41	I	IN2	68	O	O24	95	O	O18	122	I	D4
15	I	IN28	42	O	SO3	69	I	IN31	96	O	O19	123	–	GND
16	O	SO27	43	O	SO2	70	I	IN15	97	I	A2	124	I	D3
17	O	SO26	44	O	SO1	71	O	O8	98	I	A5	125	I	D2
18	O	SO25	45	O	SO0	72	O	O9	99	–	NC	126	I	D1
19	O	SO24	46	I	IN0	73	O	O10	100	–	NC	127	I	D0
20	I	IN30	47	I	IN16	74	O	O11	101	–	GND	128	–	GND
21	I	IN14	48	O	SO16	75	I	IN13	102	–	VDD	129	–	VDD
22	O	SO8	49	O	SO17	76	O	O12	103	–	NC	130	I	A0
23	O	SO9	50	O	SO18	77	O	O13	104	–	NC	131	I	A1
24	O	SO10	51	O	SO19	78	O	O14	105	–	GND	132	–	GND
25	O	SO11	52	I	IN18	79	O	O15	106	I	SEL1	133	I	SILA
26	I	IN12	53	I	IN21	80	I	IN9	107	I	SEL2	134	I	RST
27	I	IN11	54	O	O20	81	I	IN7	108	–	NC	135	I	DTLA

A0-A5 ; ADDRESS BUS INPUTS
D0-D5 ; DATA BUS INPUTS
DTLA ; DATA LATCH INPUT
IN0-IN31 ; INPUT DATA INPUTS
O0-O31 ; OUTPUT DATA OUTPUTS
RST ; RESET INPUT
SEL1 ; SYNC OR NOT SYNC SELECT OF O0-O31
SEL2 ; COMPLEMENT OUTPUT DATA OR OUTPUT PIN CONTROL SELECT OF SO0-SO31
(1 : COMPLEMENT OUTPUT DATA, 0 : OUTPUT PIN CONTORL)
SILA ; SIGNAL LATCH INPUT
SO0-SO31 ; COMPLEMENT OUTPUT DATA/OUTPUT PIN CONTROL OUTPUTS
WT ; WRITE INPUT

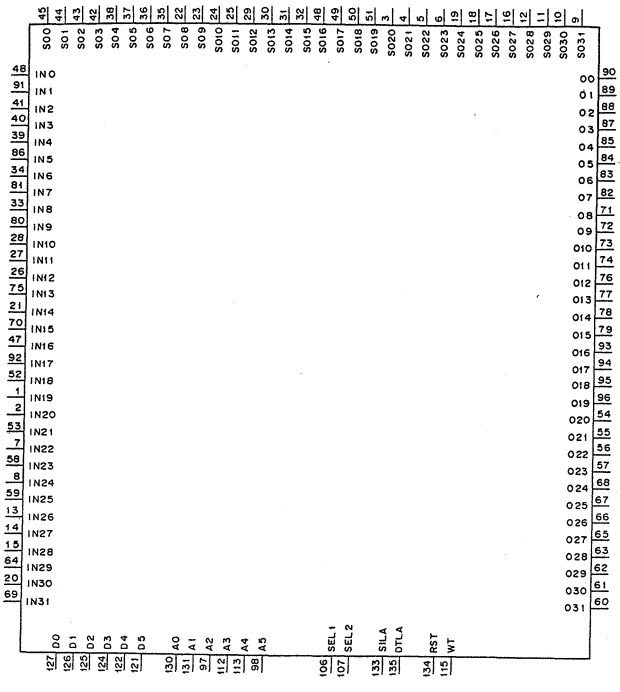

CXD8025Q (SONY) FLAT PACKAGE

32-BIT SERIAL-PARALLEL/PARALLEL-SERIAL CONVERTER

– TOP VIEW –

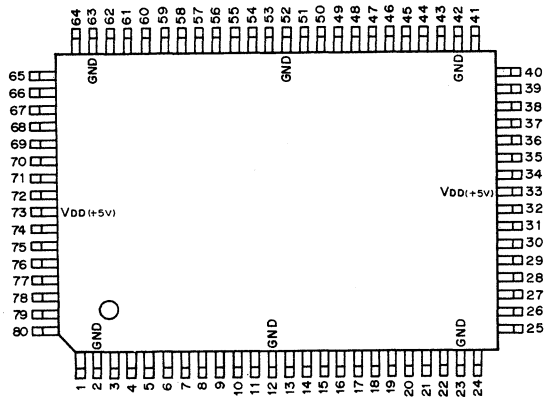

PIN No.	I/O	SIGNAL	PIN No.	I/O	SIGNAL	PIN No.	I/O	SIGNAL	PIN No.	I/O	SIGNAL
1	O	SOA	21	I/O	SDLC	41	I/O	SDRD	61	I	SIB
2	–	GND	22	I/O	SDRC	42	–	GND	62	O	SOB
3	I	SIA	23	–	GND	43	I/O	SDLD	63	–	GND
4	I/O	Q0	24	I	MODA	44	I/O	Q31	64	I	CRCD
5	I/O	Q1	25	I	MODB	45	I/O	Q30	65	I	POEB
6	I/O	Q2	26	I	THRC	46	I/O	Q29	66	I	PIEB
7	I/O	Q3	27	I	DFFC	47	I/O	Q28	67	I	PSLB
8	I/O	Q4	28	I	DIRC	48	I/O	Q27	68	I	CRCP
9	I/O	Q5	29	I	LDC	49	I/O	Q26	69	I	CRCC
10	I/O	Q6	30	I	RCKC	50	I/O	Q25	70	I	RCKB
11	I/O	Q7	31	I	SCKC	51	I/O	Q24	71	I	SCKB
12	–	GND	32	I	SCLC	52	–	GND	72	I	SCLB
13	I/O	Q8	33	–	VDD (+5V)	53	I/O	Q23	73	–	VDD (+5V)
14	I/O	Q9	34	I	SCLD	54	I/O	Q22	74	I	SCLA
15	I/O	Q10	35	I	SCKD	55	I/O	Q21	75	I	SCKA
16	I/O	Q11	36	I	RCKD	56	I/O	Q20	76	I	RCKA
17	I/O	Q12	37	I	LDD	57	I/O	Q19	77	I	PSLA
18	I/O	Q13	38	I	DIRD	58	I/O	Q18	78	I	PIEA
19	I/O	Q14	39	I	DFFD	59	I/O	Q17	79	I	POEA
20	I/O	Q15	40	I	THRD	60	I/O	Q16	80	O	CRCE

INPUT

CRCC ; CLOCK INPUT FOR CRC CHECKER/GENERATOR
CRCD ; DATA INPUT FOR CRC CHECKER/GENERATOR
CRCP ; PRESET INPUT FOR CRC CHECKER/GENERATOR
DFFC ; DFF MODE SET FOR C BLOCK (MODE = 0)
PARALLEL LOAD CONTROL FOR A BLOCK SHIFT REGISTOR (MODE = 2)
DFFD ; DFF MODE SET FOR D BLOCK (MODE = 0)
PARALLEL LOAD CONTROL FOR B BLOCK SHIFT REGISTOR (MODE = 2) DISABLE (MODE 1, 3)
DIRC ; SHIFT DIRECTION SET FOR C BLOCK SHIFT REGISTER
DIRD ; SHIFT DIRECTION SET FOR D BLOCK SHIFT REGISTER
LDC ; PARALLEL LOAD CONTROL FOR C BLOCK SHIFT REGISTER
LDD ; PARALLEL LOAD CONTROL FOR D BLOCK SHIFT REGISTER
MODA, MODB ; MODE (0, 1, 2, 3) SET
PIEA ; PARALLEL IN ENABLE FOR AC BLOCK
PIEB ; PARALLEL IN ENABLE FOR BD BLOCK
POEA ; PARALLEL OUT ENABLE FOR AC BLOCK
POEB ; PARALLEL OUT ENABLE FOR BD BLOCK
PSLA ; PARALLEL DATA SELECT FOR AC BLOCK
PSLB ; PARALLEL DATA SELECT FOR BD BLOCK
RCKA ; CLOCK FOR A BLOCK DFF
RCKB ; CLOCK FOR B BLOCK DFF
RCKC ; CLOCK FOR C BLOCK DFF
RCKD ; CLOCK FOR D BLOCK DFF
SCKA ; CLOCK FOR A BLOCK SHIFT REGISTER
SCKB ; CLOCK FOR B BLOCK SHIFT REGISTER
SCKC ; CLOCK FOR C BLOCK SHIFT REGISTER
SCKD ; CLOCK FOR D BLOCK SHIFT REGISTER
SCLA ; ASYNCHRONOUS CLEAR FOR A BLOCK SHIFT REGISTER
SCLB ; ASYNCHRONOUS CLEAR FOR B BLOCK SHIFT REGISTER
SCLC ; ASYNCHRONOUS CLEAR FOR C BLOCK SHIFT REGISTER
SCLD ; ASYNCHRONOUS CLEAR FOR D BLOCK SHIFT REGISTER
SIA ; SERIAL DATA OUTPUT FOR A BLOCK SHIFT REGISTER
SIB ; SERIAL DATA OUTPUT FOR B BLOCK SHIFT REGISTER
THRC ; THOROUGH SET FOR C BLOCK DFF (L : THOROUGH)
THRD ; THOROUGH SET FOR D BLOCK DFF (L : THOROUGH)

OUTPUT

CRCE ; CHECK OUTPUT FOR CRC CHECKER/GENERATOR
SOA ; SERIAL DATA OUTPUT FOR A BLOCK SHIFT REGISTER
SOB ; SERIAL DATA OUTPUT FOR B BLOCK SHIFT REGISTER

INPUT/OUTPUT

Q0 – Q7 ; PARALLEL DATA FOR AC BLOCK
Q8 – Q15 ; PARALLEL DATA FOR AC BLOCK (MODE 0, 2, 3)
PARALLEL DATA FOR BD BLOCK (MODE = 1)
Q23 – Q16 ; PARALLEL DATA FOR BD BLOCK
Q31 – Q24 ; PARALLEL DATA FOR BD BLOCK
SDLC ; SERIAL DATA (L SIDE) FOR C BLOCK SHIFT REGISTER
SDRC ; SERIAL DATA (R SIDE) FOR C BLOCK SHIFT REGISTER
SDLD ; SERIAL DATA (L SIDE) FOR D BLOCK SHIFT REGISTER
SDRD ; SERIAL DATA (R SIDE) FOR D BLOCK SHIFT REGISTER

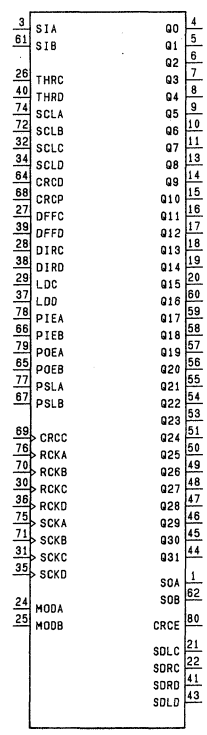

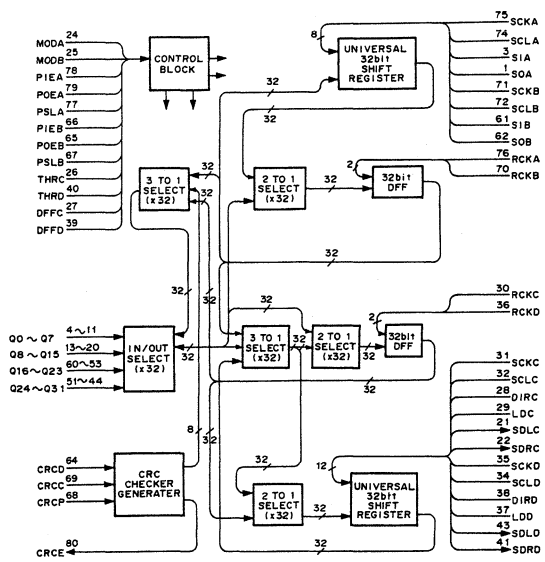

CXD8125Q (SONY)

C-MOS I/O PORT EXPANDER

– TOP VIEW –

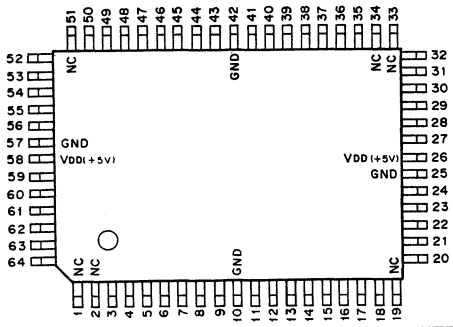

(VDD = + 5V)

PIN NO.	I/O	SIGNAL	PIN NO.	I/O	SIGNAL	PIN NO.	I/O	SIGNAL	PIN NO.	I/O	SIGNAL
1	–	NC	17	I/O	PC6	33	–	NC	49	I/O	PX0
2	–	NC	18	I/O	PC7	34	–	NC	50	I/O	PX1
3	I/O	PB1	19	–	NC	35	I/O	D3	51	–	NC
4	I/O	PB2	20	I/O	PD0	36	I/O	D4	52	I/O	PX2
5	I/O	PB3	21	I/O	PD1	37	I/O	D5	53	I/O	PX3
6	I/O	PB4	22	I/O	PD2	38	I/O	D6	54	I/O	PA0
7	I/O	PB5	23	I/O	PD3	39	I/O	D7	55	I/O	PA1
8	I/O	PB6	24	I/O	PD4	40	I	CLR	56	I/O	PA2
9	I/O	PB7	25	–	GND	41	I	RST	57	–	GND
10	–	GND	26	–	VDD	42	–	GND	58	–	VDD
11	I/O	PC0	27	I/O	PD5	43	I	WR	59	I/O	PA3
12	I/O	PC1	28	I/O	PD6	44	I	RD	60	I/O	PA4
13	I/O	PC2	29	I/O	PD7	45	I	CS	61	I/O	PA5
14	I/O	PC3	30	I/O	D0	46	I/O	A0	62	I/O	PA6
15	I/O	PC4	31	I/O	D1	47	I/O	A1	63	I/O	PA7
16	I/O	PC5	32	I/O	D2	48	I/O	A2	64	I/O	PB0

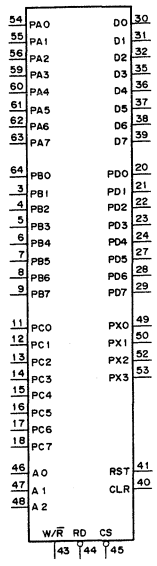

INPUT

A0 – A2 : ADDRESS
CLR : CLEAR
$\overline{CS}$: CHIP SELECT
$\overline{RD}$: READ STROBE
RST : RESET
W/$\overline{R}$: WRITE ENABLE

INPUT/OUTPUT

D0 – D7 : DATA
PA0 – PA7 : PORT A
PB0 – PB7 : PORT B
PC0 – PC7 : PORT C
PD0 – PD7 : PORT D
PX0 – PX7 : PORT X

CXD8307Q (SONY) FLAT PACKAGE

DUAL 32INPUTS 32BITS MSB FIRST SERIAL ADDER

– TOP VIEW –

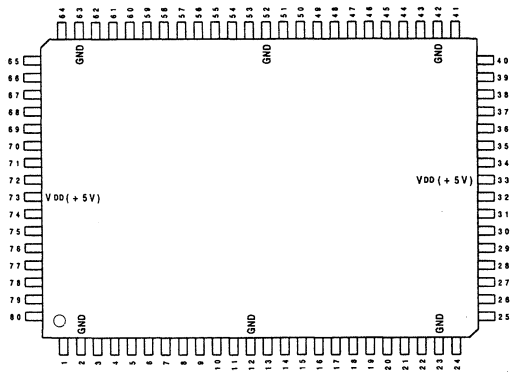

PIN NO.	I/O	SYMBOL	PIN NO.	I/O	SYMBOL	PIN NO.	I/O	SYMBOL	PIN NO.	I/O	SYMBOL
1	O	WCK	21	I	IN18A	41	I	$\overline{RES}$	61	I	IN18B
2	–	GND	22	I	IN19A	42	–	GND	62	I	IN19B
3	I	IN1A	23	–	GND	43	I	IN1B	63	–	GND
4	I	IN2A	24	I	IN20A	44	I	IN2B	64	I	IN20B
5	I	IN3A	25	I	IN21A	45	I	IN3B	65	I	IN21B
6	I	IN4A	26	I	IN22A	46	I	IN4B	66	I	IN22B
7	I	IN5A	27	I	IN23A	47	I	IN5B	67	I	IN23B
8	I	IN6A	28	I	IN24A	48	I	IN6B	68	I	IN24B
9	I	IN7A	29	I	IN25A	49	I	IN7B	69	I	IN25B
10	I	IN8A	30	I	IN26A	50	I	IN8B	70	I	IN26B
11	I	IN9A	31	I	IN27A	51	I	IN9B	71	I	IN27B
12	–	GND	32	I	FS256	52	–	GND	72	I	TEST
13	I	IN10A	33	–	VDD(+5V)	53	I	IN10B	73	–	VDD(+5V)
14	I	IN11A	34	I	LRCK	54	I	IN11B	74	O	$\overline{OVF}$
15	I	IN12A	35	I	IN28A	55	I	IN12B	75	I	IN28B
16	I	IN13A	36	I	IN29A	56	I	IN13B	76	I	IN29B
17	I	IN14A	37	I	IN30A	57	I	IN14B	77	I	IN30B
18	I	IN15A	38	I	IN31A	58	I	IN15B	78	I	IN31B
19	I	IN16A	39	I	IN32A	59	I	IN16B	79	I	IN32B
20	I	IN17A	40	O	OUTA	60	I	IN17B	80	O	OUTB

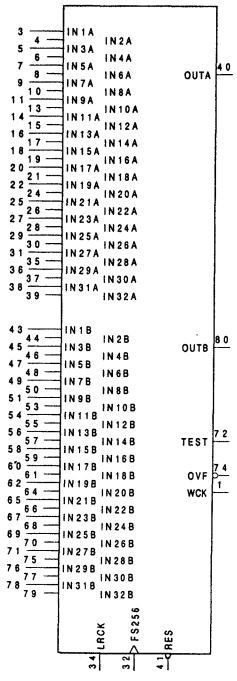

INPUT

FS256 ;MASTER CLOCK(256FS)
IN1A–IN32A ;A CH DATA INPUTS(1 TO 32)
IN1B–IN32B ;B CH DATA INPUTS(1 TO 32)
LRCK ;PHASE REGULATION SIGNAL
TEST ;TEST
$\overline{RES}$;RESET

OUTPUT

OUTA ;A CH SERIAL ADDER DATA
OUTB ;B CH SERIAL ADDER DATA
WCK ;SIFT CLOCK FOR $\overline{OVF}$
$\overline{OVF}$;OVERFLOW MONITOR(NEGATIVE PULSE)

CXD8277Q (TI) FLAT PACKAGE

CMOS DIGITAL AUDIO (AES/EBU) ENCODER

– TOP VIEW –

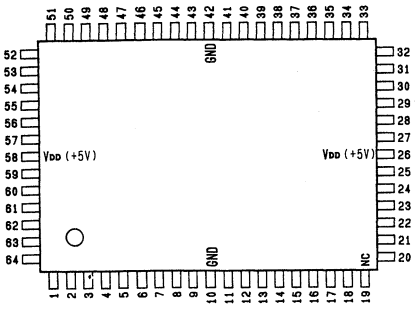

(VDD = + 5V)

PIN No.	I/O	SIGNAL	PIN No.	I/O	SIGNAL	PIN No.	I/O	SIGNAL	PIN No.	I/O	SIGNAL
1	I	BIPHCLK	17	O	MONIT4	33	I	DATA6	49	I	TFSID0
2	I	LRPOLL	18	O	MONIT5	34	I	DATA7	50	I	TFSID1
3	I	LRCKO	19	–	NC	35	I	$\overline{WR}$	51	I	TFSID2
4	I	BCKPOLL	20	I	AD0	36	I	$\overline{CS}$	52	I	$\overline{RESET}$
5	I	BCKO	21	I	AD1	37	I	CPU AUTO	53	I	CSEL
6	I	TDATAI	22	I	AD2	38	I	TBITLN0	54	I	TEST0
7	I	VIN	23	I	AD3	39	I	TBITLN1	55	I	TEST1
8	I	UIN	24	I	AD4	40	I	TBITLN2	56	O	MONIT2
9	I	CIN	25	I	AD5	41	I	TMONO	57	O	MONIT3
10	–	GND	26	–	VDD	42	–	GND	58	–	VDD
11	I	TxBLKID	27	I	DATA0	43	I	TEMP0A	59	I	TEST5
12	I	BLKIDSEL	28	I	DATA1	44	I	TEMP1A	60	I	TEST2
13	I	DTMODE0	29	I	DATA2	45	I	TEMP2A	61	I	TEST3
14	I	DTMODE1	30	I	DATA3	46	I	TEMP0B	62	I	POS
15	I	DTMODE2	31	I	DATA4	47	I	TEMP1B	63	O	MONIT1
16	I	DTMODE3	32	I	DATA5	48	I	TEMP2B	64	O	TxDATA

INPUT

AD0 – AD5	; ADDRESS BUS FOR WRITING CHANNEL STATUS DATA FROM EXTERNAL CPU TO CHANNEL STATUS REGISTER
BCKO	; BIT CLOCK (64Fs, 32Fs) FOR TDATAI
BCKPOLL	; POLARITY SWITCHING OF BCKO (PIN No.5)
BIPHCLK	; 128Fs FOR DO OUTPUT
BLKIDSEL	; BLOCK ID EXTERNAL/INTERNAL SELECTION ("H" : INTERNAL MODE)
CIN	; SERIAL INPUT OF EACH SUB FRAME CHANNEL STATUS
CPU AUTO	; SWITCHING SIGNAL OF CPU AND AUTO MODE ("H" : AUTO MODE)
$\overline{CS}$	; CHIP SELECT SIGNAL FROM EXTERNAL CPU TO CHANNEL STATUS REGISTER ("L" : SELECT, "H" : UNSELECT)
CSEL	; SELECTS THE USE OF CIN (EXTERNAL INPUT) OR INTERNAL REGISTER FOR CHANNEL STATUS DATA. ("H" : INTERNAL REGISTER)
DATA0 – DATA7	; DATA BUS FOR WRITING CHANNEL STATUS DATA FROM EXTERNAL CPU TO CHANNEL STATUS REGISTER
DTMODE0 – 3	; DECISION OF DIGITAL AUDIO SIGNAL INPUT FORMAT
LRCKO	; L/R CLOCK FOR DIGITAL AUDIO SIGNAL OUTPUT
LRPOLL	; POLARITY SWITCHING OF LRCKO (PIN No.3)
POS	; FORCIBLY SETS PREAMBLE TO BE POSITIVE POLARITY ("H" : ACTIVE)
$\overline{RESET}$	; SETS TxDATA OUTPUT (AUDIO DATA, AND VALIDITY BIT, USER DATA AND CHANNEL STATUS DATA) TO BE "0". ("L" : ACTIVE)
TBITLN0 – 2	; SUBFRAME A/B CHANNEL STATUS SETTING (DATA BIT LENGTH)
TDATAI	; DIGITAL AUDIO SIGNAL INPUT
TEMP0A – 2A	; SUBFRAME A EMP INFORMATION
TEMP0B – 2B	; SUBFRAME B EMP INFORMATION
TEST0	; TEST RESET (CONNECTION TO GND)
TEST1	; TEST RESET (CONNECTION TO GND)
TEST2	; TEST
TEST3	; TEST
TEST5	; CONTROL SIGNAL OF MONIT1 TO 5
TFSID0 – 2	; SUBFRAME A/B Fs INFORMATION
TMONO	; SUBFRAME A/B CHANNEL STATUS SETTING (MONOPHONIC/TWO CHANNEL MODE)
TxBLKID	; EXTERNAL BLOCK ID SIGNAL
UNI	; SERIAL INPUT OF EACH SUB FRAME USER DATA
VIN	; SERIAL INPUT OF EACH SUB FRAME VALIDITY BIT
$\overline{WR}$	; CHANNEL STATUS DATA WRITING FROM EXTERNAL CPU TO CHANNELSTATUS REGISTER

OUTPUT

MONIT1 – 5	; MONITOR
TxDATA	; AES/EBU FORMAT DIGITAL AUDIO OUTPUT

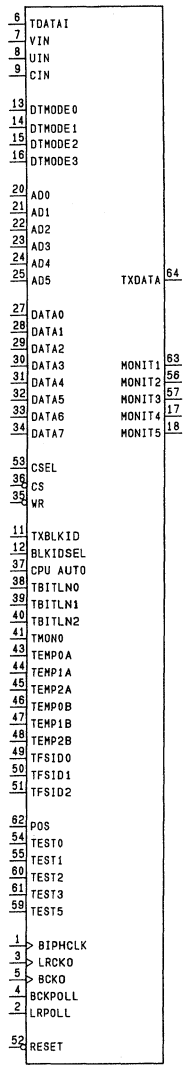

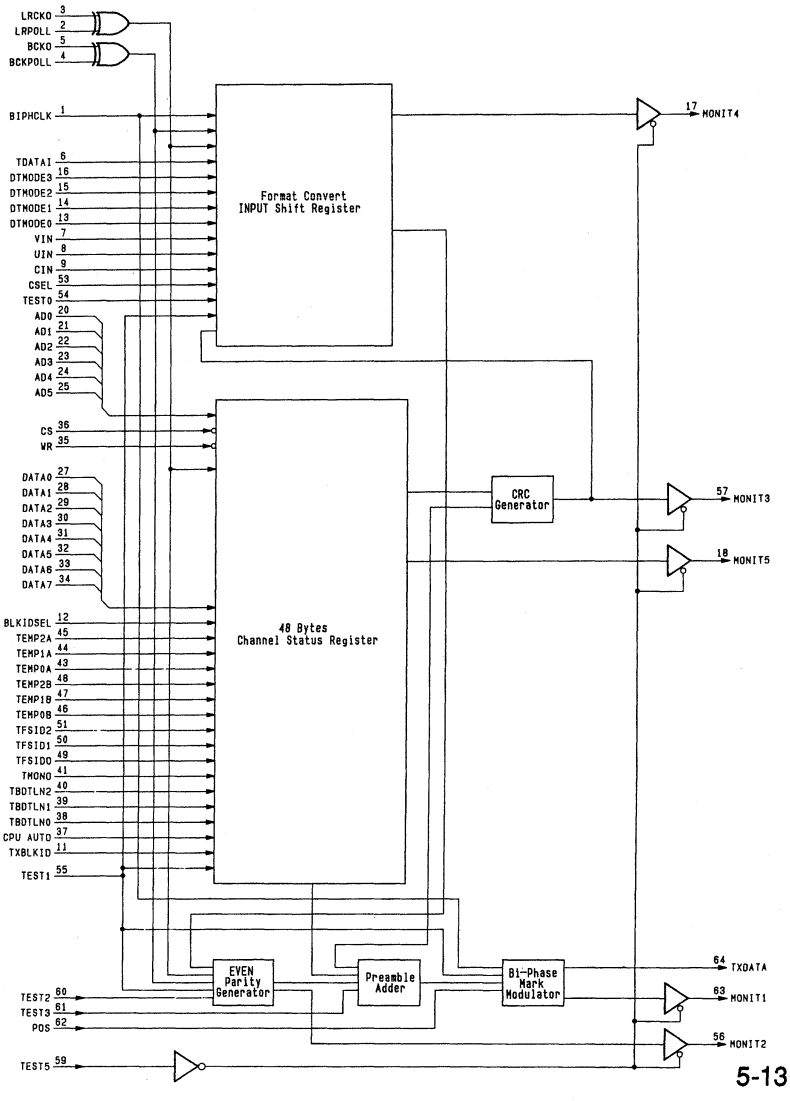

CXD8278AQ (SONY)

C-MOS DIGITAL AUDIO SIGNAL (AES/EBU) DECODER
– TOP VIEW –

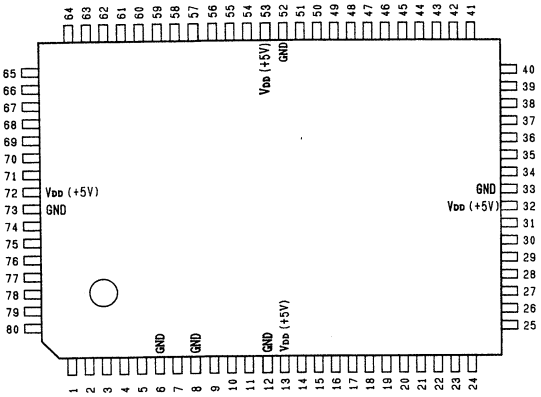

Pin No.	I/O	SIGNAL	Pin No.	I/O	SIGNAL	Pin No.	I/O	SIGNAL	Pin No.	I/O	SIGNAL
1	O	$\overline{\text{NOSGNL}}$	21	I/O	FM12 TS4	41	I/O	RD LN2	61	I	BCKPOL
2	O	$\overline{\text{UNLOCK}}$	22	I/O	FIXDPLLZ	42	I	$\overline{\text{CS}}$	62	O	RXLR
3	O	$\overline{\text{SYNCERR}}$	23	I/O	F128 TS2	43	O	$\overline{\text{INT}}$	63	I	LRCKI
4	I	RXDATA	24	I	TST3	44	I	CPU_AUTO	64	I	LRPOL
5	I	CLKIN	25	I/O	AD0 CON	45	I	TST1	65	O	RXBLKID
6	–	GND	26	I/O	AD1 NOA	46	O	SLIP0	66	O	CSAVLDT
7	O	CLKOUT	27	I/O	AD2 FS0	47	O	SLIP1	67	O	CSBVLDT
8	–	GND	28	I/O	AD3 FS1	48	I	DTMODE0	68	O	CRCA
9	O	FMASTER	29	I/O	AD4 FS2	49	I	DTMODE1	69	O	CRCB
10	I	PLLSEL	30	I/O	AD5 EOA	50	I	DTMODE2	70	I	MUTE0
11	O	PLLVAR	31	O	D0 E1A	51	I	DTMODE3	71	I	MUTE1
12	–	GND	32	–	VDD	52	–	GND	72	–	VDD
13	–	VDD	33	–	GND	53	–	VDD	73	–	GND
14	O	PLLREF	34	O	D1 E2A	54	O	COUT	74	I	$\overline{\text{MUTEON}}$
15	I/O	LOCKPH0	35	O	D2 E0B	55	O	UOUT	75	O	$\overline{\text{VE3A}}$
16	I/O	LOCKPH1	36	O	D3 E1B	56	O	VOUT	76	O	$\overline{\text{VE3B}}$
17	I/O	LOCKPH2	37	O	D4 E2B	57	O	ERROR	77	O	$\overline{\text{VE1A}}$
18	I/O	LOCKPH3	38	O	D5 MON	58	O	RDATA	78	O	$\overline{\text{VE1B}}$
19	I/O	LOCKPH4	39	O	D6 LN0	59	O	RXBCK	79	O	$\overline{\text{PE1}}$
20	I/O	LOCKPH5	40	O	D7 LN1	60	I	BCKI	80	O	$\overline{\text{PE3}}$

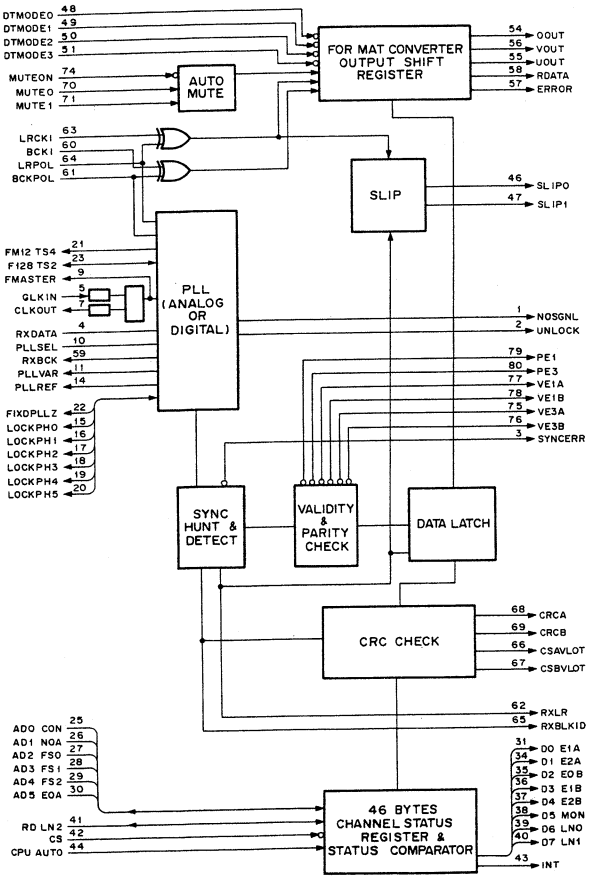

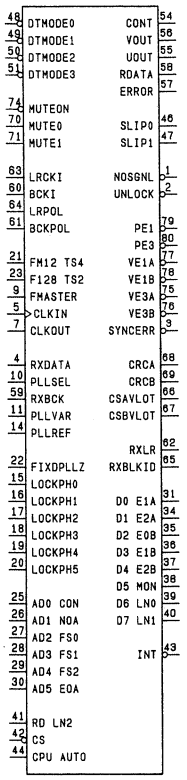

INPUT

BCKI ; REFERENCE BIT CLOCK (64/32Fs)
BCKPOL ; POLARITY SWITCHING SIGNAL OF BCKI (PIN NO.60) AND RXBCK (PIN NO.59)
CLKIN ; MASTER CLOCK OSCILLATOR INPUT AT DIGITAL PLL
CPU AUTO ; SELECTS CPU INTERFACE OR AUTO INTERFACE.
("H" : AUTO INTERFACE, "L" : CPU INTERFACE)
$\overline{\text{CS}}$; CHIP SELECT SIGNAL (INPUT FOR CHANNEL STATUS RESISTER) ("L" : SELECT)
DTMODE0 – 3 ; OUTPUT FORMAT SPECIFYING CODE OF RDATA SIGNAL (PIN NO.58)
LRCKI ; REFERENCE L/R CLOCK INPUT (Fs PERIOD)
LRPOL ; POLARITY SWITCHING SIGNAL OF LRCKI (PIN NO.63) AND RXLR (PIN NO.62)
MUTE0,1 ; RDATA (PIN NO.58) MUTE PERIOD SETTING CODE
$\overline{\text{MUTEON}}$; "L" : AUDIO OUTPUT BE FORCIBLY MUTE ON FOR A CERTAIN PERIOD
PLLSEL ; "L" : ANALOG PLL, "H" : DIGITAL PLL
RXDATA ; AES/EBU INPUT
TST1 ; TEST INPUT (NORMALLY FIXED TO "L".)
TST3 ; TEST PIN (FIXED TO "L".)

OUTPUT

CLKOUT ; MASTER CLOCK OSCILLATOR OUTPUT AT DIGITAL PLL
COUT ; C BIT STATUS SIGNAL EXTRACTED FROM AES/EBU INPUT SIGNAL.
CRCA, CRCB ; OUTPUTS THE RESULT OF CHANNEL STATUS CRC CHECK OF SUBFRAME A AND B AT ERROR OCCURRING
CSAVLDTY, CSBVLDTY ; SUBFRAME A AND B CHANNEL STATUS
D0 E1A ; SUBFRAME A CHANNEL STATUS (CPU AUTO : "H")
D1 E2A ; SUBFRAME A CHANNEL STATUS (CPU AUTO : "H")
D2 E0B ; SUBFRAME B CHANNEL STATUS (CPU AUTO : "H")
D3 E1B ; SUBFRAME B CHANNEL STATUS (CPU AUTO : "H")
D4 E2B ; SUBFRAME B CHANNEL STATUS (CPU AUTO : "H")
D5 MON ; SUBFRAME A CHANNEL STATUS (CPU AUTO : "H")
D6 LN0 ; SUBFRAME A/B CHANNEL STATUS (CPU AUTO : "H")
D7 LN1 ; SUBFRAME A/B CHANNEL STATUS (CPU AUTO : "H")
ERROR ; ERROR INFORMATION OUTPUT (PARITY, SLIP ERROR, etc.) IN SERIAL.
FMASTER ; MASTER CLOCK OUTPUT
$\overline{\text{INT}}$; INTERRUPTION SIGNAL OUTPUT
$\overline{\text{NOSGNL}}$; NO SIGNAL DETECTION
$\overline{\text{PE1}}$; PARITY ERROR DETECTION OUTPUT (1 SUBFRAM)
$\overline{\text{PE3}}$; PARITY ERROR DETECTION OUTPUT (3 SUBFRAMS CONTINUOUSLY)
PLLREF ; RXDATA SYNC DETECTION
PLLVAR ; ANALOG PLL MASTER CLOCK 1/256 (2Fs) SIGNAL
RDATA ; AES/EBU INPUT SIGNAL DEMODULATED SIGNAL OUTPUT
RXBCK ; BIT CLOCK OUTPUT GENERATED FROM AES/EBU INPUT SIGNAL
RXBLKID ; BLOCK ID SIGNAL
RXLR ; REFERENCE L/R CLOCK OUTPUT (Fs PERIOD)
SLIP0, SLIP1 ; DATA SLIP DETECTION
$\overline{\text{SYNCERR}}$; SYNC ERROR DETECTION OUTPUT.
$\overline{\text{UNLOCK}}$; DIGITAL PLL UNLOCK DETECTION OUTPUT.
UOUT ; U BIT (USER DATA BIT) STATUS SIGNAL EXTRACTED FROM RXDATA SIGNAL
$\overline{\text{VE1A}}$; VALIDITY ERROR DETECTION OUTPUT (ONE SUBFRAM A).
$\overline{\text{VE1B}}$; VALIDITY ERROR DETECTION OUTPUT (ONE SUBFRAM B).
VE3A ; VALIDITY ERROR DETECTION OUTPUT
(3FRAMS CONTINUOUSLY FOR SUBFRAM A)
VE3B ; VALIDITY ERROR DETECTION OUTPUT
(3FRAMS CONTINUOUSLY FOR SUBFRAM B)
VOUT ; V BIT (VALIDITY BIT) STATUS SIGNAL EXTRACTED FROM RXDATA SIGNAL

INPUT/OUTPUT

AD0 CON ; CHANNEL STATUS (CPU AUTO : "H")
AD1 NOA ; CHANNEL STATUS (CPU AUTO : "H")
AD2 FS0 ; CHANNEL STATUS (CPU AUTO : "H")
AD3 FS1 ; CHANNEL STATUS (CPU AUTO : "H")
AD4 FS2 ; CHANNEL STATUS (CPU AUTO : "H")
AD5 EOA ; SUBFRAME A CHANNEL STATUS (CPU AUTO : "H")
F128 TS2 ; OUTPUTS 128Fs OF DIGITAL PLL.
FIXDPLL ; PLLSEL : "H",
DIGITAL PLL OPERATION MODE SELECTION SIGNAL
("N" : NARROW MODE, "H" : WIDE MODE)
FM12 TS4 ; 1/2 MCK OUTPUT
LOCKPH0 – 5 ; PLLSEL : "H", FIXDPLL : "H"
OPERATION PERIOD SETTING DATA INPUT AT NARROW MODE
(DIGITAL PLL MODE)
RD LN2 ; SUBFRAME A/B CHANNEL STATUS (CPU AUTO ; "H")

DF1760P (BURR-BROWN)

20-BIT A/D CONVERSION SYSTEM
– TOP VIEW –

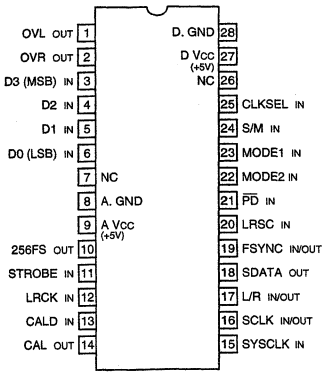

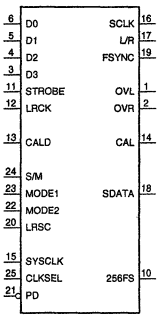

INPUT

CALD	; CALIBLATION (L: EFFECTIVE)
CLKSEL	; SYSTEM CLOCK SELECT
D0 - D3	; DATA INPUTS
LRCK	; L/R CLOCK
LRSC	; L/R SELECT (H: Lch)
MODE1, 2	; OUTPUT DATA FORMAT SELECT
STROBE	; DATA STROBE
SYSCLK	; SESTEM CLOCK
S/M	; SLAVE/MASTER MODE SELECT (H: SLAVE)
$\overline{PD}$	; POWER DOWN MODE (L: POWER DOWN)

OUTPUT

CAL	; CALIBLATION (H: EXECUTION)
OVL	; Lch OVERFLOW DETECTION (H: DETECTION)
OVR	; Rch OVERFLOW DETECTION (H: DETECTION)
SDATA	; SERIAL DATA
256FS	; SYSTEM CLOCK

INPUT/OUTPUT

FSYNC	; FRAME SYNCHRO CLOCK
L/R	; L/R CHANNEL DISCRIMINATE CLOCK
SCLK	; DATA CLOCK

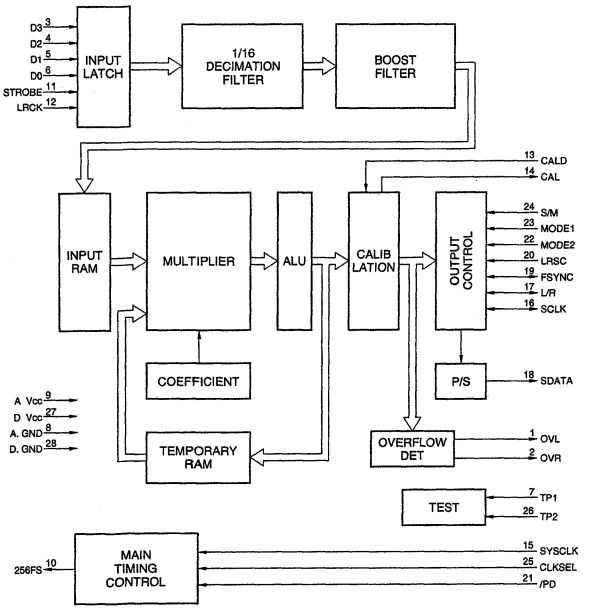

DS1643-150 (DALLAS)

C-MOS 64K (8192 × 8)-BIT NONVOLATILE TIMEKEEPING S-RAM WITH REAL TIME CLOCK
– TOP/SIDE VIEW –

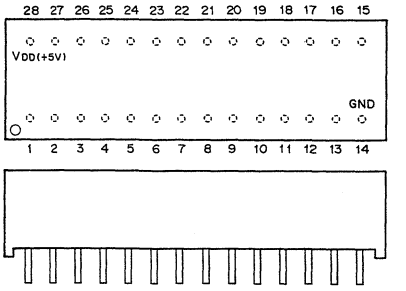

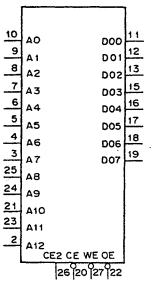

PIN No.	I/O	SIGNAL	PIN No.	I/O	SIGNAL
1	–	NC	15	I/O	DO3
2	I	A12	16	I/O	DO4
3	I	A7	17	I/O	DO5
4	I	A6	18	I/O	DO6
5	I	A5	19	I/O	DO7
6	I	A4	20	I	$\overline{CE}$
7	I	A3	21	I	A10
8	I	A2	22	I	$\overline{OE}$
9	I	A1	23	I	A11
10	I	A0	24	I	A9
11	I/O	DO0	25	I	A8
12	I/O	DO1	26	I	CE2
13	I/O	DO2	27	I	$\overline{WE}$
14	–	GND	28	–	V_{DD} (+5V)

INPUT

A0 – A12	; ADDRESS INPUTS
$\overline{CE}$, CE2	; CHIP ENABLES
$\overline{OE}$	; OUTPUT ENABLE
$\overline{WE}$	; WRITE ENABLE

INPUT/OUTPUT

DO0 – DO7 ; DATA INPUT/OUTPUT

TRUTH TABLE DS1643 TABLE1

V_{DD}	$\overline{CE}$	CE2	$\overline{OE}$	$\overline{WE}$	MODE	DO	POWER
+5 V ± 10%	1	X	X	X	DESELECT	HIGH Z	STADBY
	X	0	X	X	DESELECT	HIGH Z	STADBY
	0	1	X	0	WRITE	DATA IN	ACTIVE
	0	1	0	1	READ	DATA OUT	ACTIVE
	0	1	1	1	READ	HIGH Z	ACTIVE
< + 4.5 V, > V_{BAT}	X	X	X	X	DESELECT	HIGH Z	C-MOS STANDBY
< V_{BAT}	X	X	X	X	DESELECT	HIGH Z	DATA RETENTION MODE

0 ; LOW LEVEL
1 ; HIGH LEVEL
X ; DON'T CARE
HIGH Z ; HIGH IMPEDANCE

DS1643 REGISTER MAP-BANK1 TABLE2

ADDRESS	DATA								FUNCTION	
	B7	B6	B5	B4	B3	B2	B1	B0		
1FFF	—	—	—	—	—	—	—	—	YEAR	00 – 99
1FFE	X	X	X	—	—	—	—	—	MONTH	01 – 12
1FFD	X	X	—	—	—	—	—	—	DATE	01 – 31
1FFC	X	FT	X	X	X	—	—	—	DAY	01 – 07
1FFB	X	X	—	—	—	—	—	—	HOUR	00 – 23
1FFA	X	—	—	—	—	—	—	—	MINUTES	00 – 59
1FF9	$\overline{OSC}$	—	—	—	—	—	—	—	SECONDS	00 – 59
1FF8	W	R	—	—	—	—	—	—	CONTROL A	

OSC : STOP BIT R : READ BIT FT : FREQUENCY TEST
W : WRITE BIT X : UNUSED

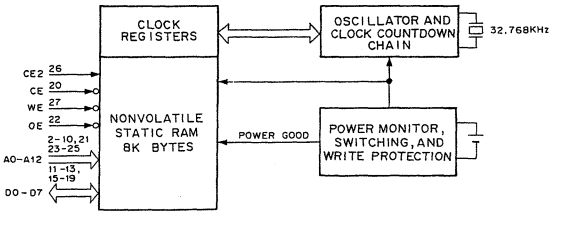

GAL16V8B-10LP (LATTICE)
GAL16V8B-25LP (LATTICE)

C-MOS ELECTRICALLY ERASABLE PROGRAMMABLE LOGIC DEVICE
– TOP VIEW –

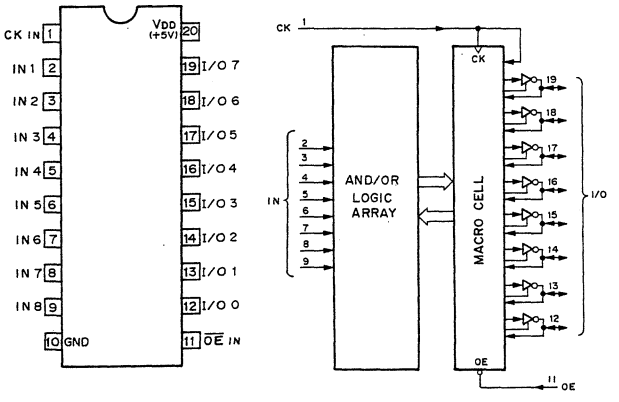

* ABOVE DIAGRAM SHOWS CONDITIONS BEFORE PROGRAMMING.

GAL22V10-15L (LATTICE)
GAL22V10B-15LP (LATTICE)

C-MOS ELECTRICALLY ERASABLE PROGRAMMABLE LOGIC DEVICE
– TOP VIEW –

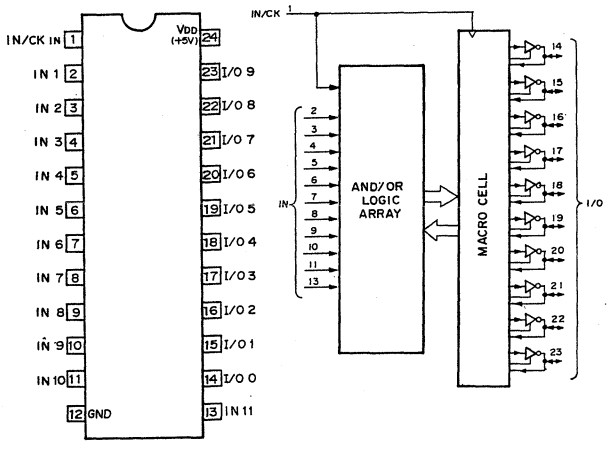

* ABOVE DIAGRAM SHOWS CONDITIONS BEFORE PROGRAMMING.

HD63265FP (HITACHI)

C-MOS FDC (FLOPPY DISK CONTROLLER)
– TOP VIEW –

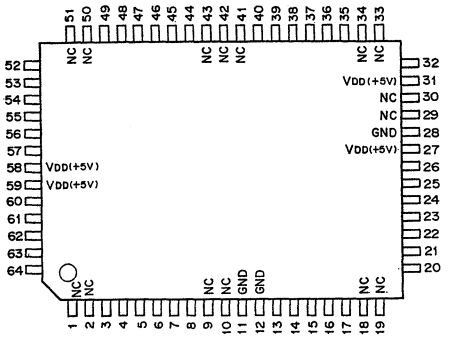

(V_{DD} = +5V)

PIN NO.	I/O	FUNCTION	PIN NO.	I/O	FUNCTION	PIN NO.	I/O	FUNCTION	PIN NO.	I/O	FUNCTION
1	–	NC	17	I/O	D4	33	–	NC	49	I	READY
2	–	NC	18	–	NC	34	–	NC	50	–	NC
3	I	RESET	19	–	NC	35	O	WGATE	51	–	NC
4	I	E($\overline{RD}$)	20	I/O	D5	36	O	WDATA	52	I	STEP
5	I	R/$\overline{W}$($\overline{WR}$)	21	I/O	D6	37	O	LATE	53	I	HDIR
6	I	CS	22	I/O	D7	38	O	EARLY	54	I	HSEL
7	I	DACK	23	O	DREQ	39	O	US1	55	I	HLOAD
8	I	RS	24	O	IRQ	40	O	US0	56	I	FRES
9	–	NC	25	I	DEND	41	–	NC	57	I	LCT
10	–	NC	26	–	V_{DD}	42	–	NC	58	–	V_{DD}
11	–	GND	27	I	CK	43	–	NC	59	–	V_{DD}
12	–	GND	28	–	GND	44	I	INDEX	60	I	NUM1
13	I/O	D0	29	–	NC	45	I	TRK0	61	I	NUM2
14	I/O	D1	30	–	NC	46	I	FAULT	62	I	SFORM
15	I/O	D2	31	–	V_{DD}	47	I	DSIDE	63	I	IFS
16	I/O	D3	32	I	RDATA	48	I	WPRT	64	I	8"/5"

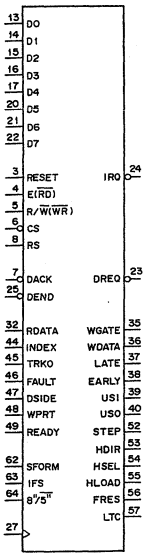

INPUT

8"/5"	; 8"/5" MODE SELECT
CS	; CHIP SELECT
DACK	; DMA ACKNOWLEDGE
DEND	; DMA END
DSIDE	; DOUBLE SIDED
E ($\overline{RD}$)	; ENABLE ($\overline{READ}$)
FRES	; FAULT RESET
HDIR	; HEAD DIRECTION
HLOAD	; HEAD LOAD
HSEL	; HEAD SELECT
IFS	; INTERFACE SELECT
LCT	; LOW CURRENT
NUM 1	; NOT USER MODE 1
NUM 2	; NOT USER MODE 2
R/$\overline{W}$	; READ/$\overline{WRITE}$
RDATA	; READ DATA
RS	; REGISTER SELECT
SFORM	; SELECT FORMATING DATA
TRK0	; TRACK 00
WPRT	; WRITE PROTECTED

OUTPUT

DREQ	; DMA REQUEST
IRQ	; INTERRUPT REQUEST
US 0	; UNIT SELECT 0
US 1	; UNIT SELECT 1
WDATA	; WRITE DATA
WGATE	; WRITE GATE

INPUT/OUTPUT

D0-D7	; DATA BUS 0-7

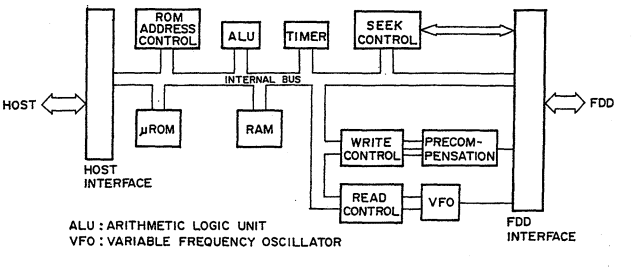

ALU : ARITHMETIC LOGIC UNIT
VFO : VARIABLE FREQUENCY OSCILLATOR

HD63484CP8 (HITACHI)

C-MOS ADVANCED CRT CONTROLLER

– TOP VIEW –

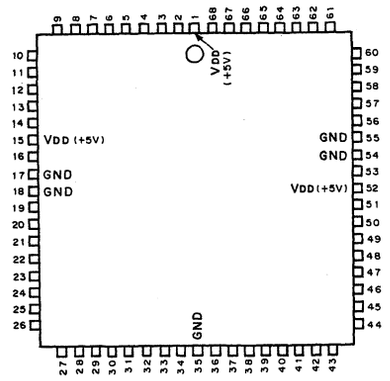

(VDD = + 5V)

PIN No.	I/O	SIGNAL	PIN No.	I/O	SIGNAL	PIN No.	I/O	SIGNAL	PIN No.	I/O	SIGNAL
1	–	VDD	18	–	GND	35	–	GND	52	–	VDD
2	O	CUD1	19	I/O	D0	36	O	RA4	53	I	2CK
3	O	CUD2	20	I/O	D1	37	O	MA19/RA3	54	–	GND
4	I	R/W	21	I/O	D2	38	O	MA18/RA2	55	–	GND
5	I	CS	22	I/O	D3	39	O	MA17/RA1	56	O	MCYC
6	I	RS	23	I/O	D4	40	O	MA16/RA0	57	O	AS
7	I	RES	24	I/O	D5	41	I/O	MAD15	58	O	DRAW
8	I/O	DONE	25	I/O	D6	42	I/O	MAD14	59	O	MRD
9	O	DREQ	26	I/O	D7	43	I/O	MAD13	60	O	CHR
10	I	DACK	27	I/O	D8	44	I/O	MAD12	61	I/O	MAD4
11	I	DTACK	28	I/O	D9	45	I/O	MAD11	62	I/O	MAD3
12	O	IRQ	29	I/O	D10	46	I/O	MAD10	63	I/O	MAD2
13	O	HSYNC	30	I/O	D11	47	I/O	MAD9	64	I/O	MAD1
14	O	VSYNC	31	I/O	D12	48	I/O	MAD8	65	I/O	MAD0
15	–	VDD	32	I/O	D13	49	I/O	MAD7	66	O	DISP2
16	I/O	EXSYNC	33	I/O	D14	50	I/O	MAD6	67	O	DISP1
17	–	GND	34	I/O	D15	51	I/O	MAD5	68	I	LPSTB

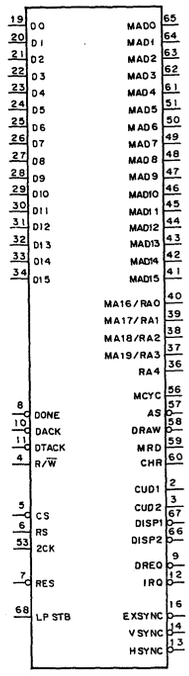

INPUT

2CK	; 2CLOCK
CS	; CHIP SELECT
DACK	; DMA ACKNOWLEDGE
DTACK	; DATA TRANSFER ACKNOWLEDGE
LPSTB	; LIGHT PEN STROBE
R/W	; READ/WRITE
RES	; RESET
RS	; REGISTER SELECT

OUTPUT

AS	; ADDRESS STROBE
CHR	; CHARACTER
CUD1, 2	; CURSOR DISPLAY 1, 2
DISP1, 2	; DISPLAY TIMING 1, 2
DRAW	; DRAW
DREQ	; DMA REQUEST
HSYNC	; HORIZONTAL SYNC
IRQ	; INTERRUPT REQUEST
MA16 – MA19	; MEMORY ADDRESS 16 – 19
MCYC	; MEMORY CYCLE
MRD	; MEMORY READ
RA0 – RA4	; RASTER ADDRESS
VSYNC	; VERTICAL SYNC

INPUT/OUTPUT

D0 – D15	; DATA BUS 0 – 15
DONE	; DONE
EXSYNC	; EXTERNAL SYNC
MAD0 – MAD15	; MEMORY ADDRESS/DATA 0 – 15

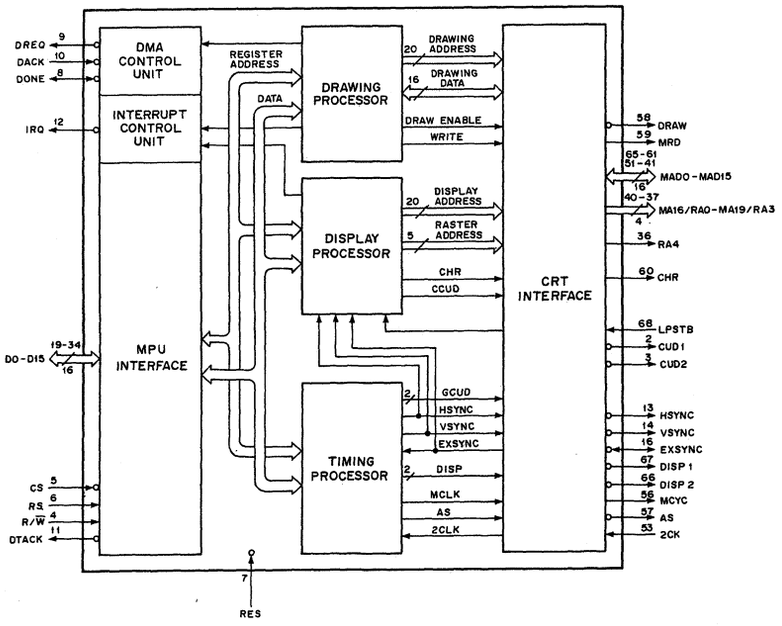

HD63487CP (HITACHI)

C-MOS MEMORY INTERFACE AND VIDEO ATTRIBUTE CONTROLLER

– TOP VIEW –

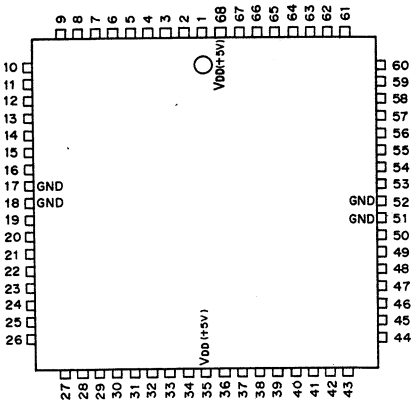

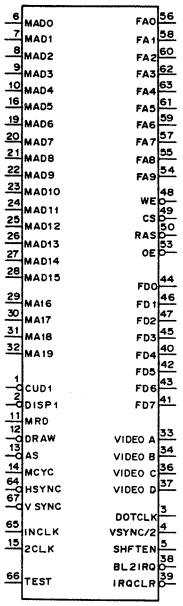

INPUT

AS	; ADDRESS STROBE
CUD1	; CURSOR DISPLAY 1
DISP1	; DISPLAY TIMING 1
DRAW	; DRAW
HSYNC	; HORIZONTAL SYNC
INCLK	; MASTER CLOCK
IRQCLR	; BL2IRQ CLEAR
MA16 – MA19	; MEMORY ADDRESS
MCYC	; MEMORY CYCLE
MRD	; MEMORY READ
TEST	; TEST
VSYNC	; VERTICAL SYNC

OUTPUT

2CLK	; 2CLK
BL2IRQ	; SETTED MA19
CS	; CHIP SELECT
DOTCLK	; VIDEO SIGNAL OUT CLOCK
FA0 – FA9	; FRAME BUFFER ADDRESS
OE	; OUTPUT ENABLE
RAS	; RAS TIMING FOR DRAM
SHFTEN	; VIDEO SIGNAL OUTPUT ENABLE
VIDEO A – VIDEO D	; VIDEO SIGNAL
VSYNC/2	; VSYNC 1/2
WE	; WRITE ENABLE

INPUT/OUTPUT

FD0 – FD7	; FRAME BUFFER DATA
MAD0 – MAD15	; MEMORY ADDRESS/DATA

(VDD = + 5V)

PIN No.	I/O	SIGNAL	PIN No.	I/O	SIGNAL	PIN No.	I/O	SIGNAL	PIN No.	I/O	SIGNAL
1	I	CUD1	18	–	GND	35	–	VDD V	52	–	GND
2	I	DISP1	19	I/O	MAD6	36	O	VIDEO C	53	O	OE
3	O	DOTCLK	20	I/O	MAD7	37	O	VIDEO D	54	O	FA9
4	O	VSYNC/2	21	I/O	MAD8	38	O	BL2IRQ	55	O	FA8
5	O	SHFTEN	22	I/O	MAD9	39	I	IRQCLR	56	O	FA0
6	I/O	MAD0	23	I/O	MAD10	40	I/O	FD4	57	O	FA7
7	I/O	MAD1	24	I/O	MAD11	41	I/O	FD7	58	O	FA1
8	I/O	MAD2	25	I/O	MAD12	42	I/O	FD5	59	O	FA6
9	I/O	MAD3	26	I/O	MAD13	43	I/O	FD6	60	O	FA2
10	I/O	MAD4	27	I/O	MAD14	44	I/O	FD0	61	O	FA5
11	I	MRD	28	I/O	MAD15	45	I/O	FD3	62	O	FA3
12	I	DRAW	29	I	MA16	46	I/O	FD1	63	O	FA4
13	I	AS	30	I	MA17	47	I/O	FD2	64	I	HSYNC
14	I	MCYC	31	I	MA18	48	O	WE	65	I	INCLK
15	O	2CLK	32	I	MA19	49	O	CS	66	I	TEST
16	I/O	MAD5	33	O	VIDEO A	50	O	RAS	67	I	VSYNC
17	–	GND	34	O	VIDEO B	51	–	GND	68	–	VDD

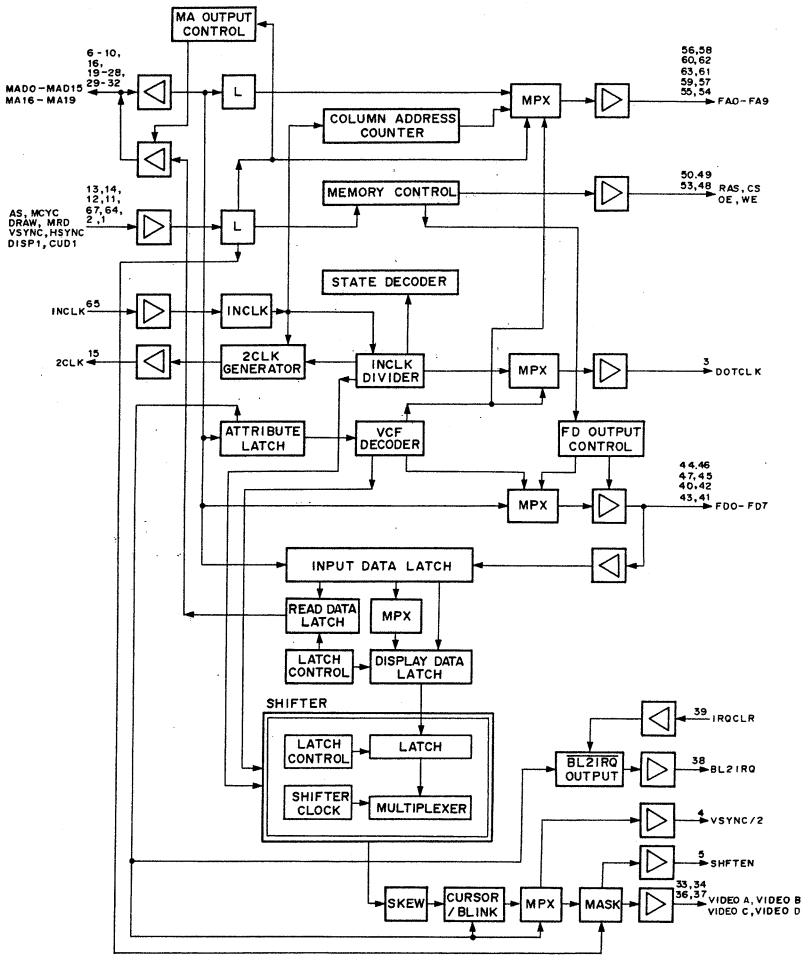

HM514402BZ-8 (HITACHI)

C-MOS 4M (1,048,576WORD × 4)-BIT MULTIPORT DYNAMIC RAM
– SIDE VIEW –

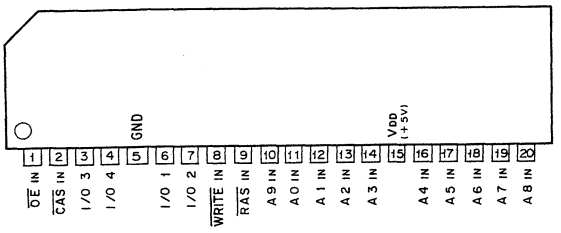

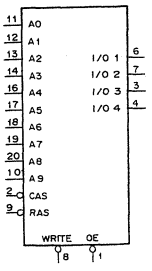

A0 – A9 ; ADDRESS INPUTS
CAS ; COLUMN ADDRESS STROBE INPUT
I/O1 – I/O4 ; DATA INPUTS/OUTPUTS
OE ; OUTPUT ENABLE INPUT
RAS ; ROW ADDRESS STROBE INPUT
WRITE ; READ/WRITE INPUT

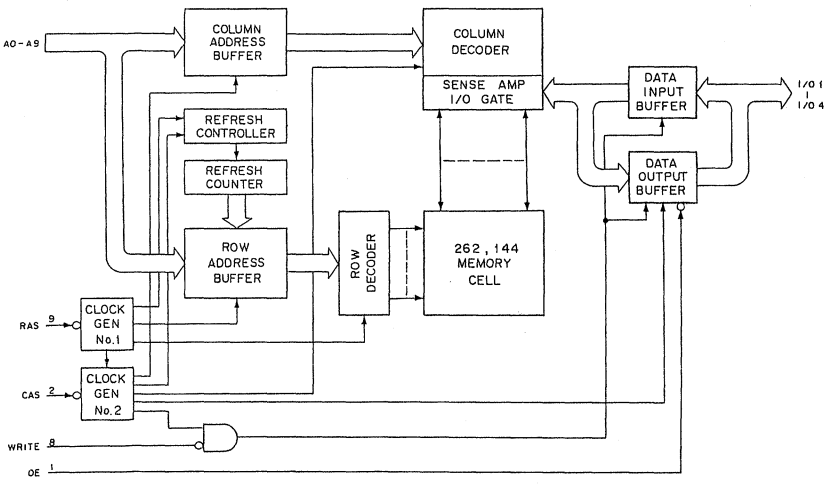

ICL7665ACSA (INTERSIL)
ICL7665SCPA (INTERSIL)

C-MOS MICROPOWER UNDER/OVER VOLTAGE DETECTOR
– TOP VIEW –

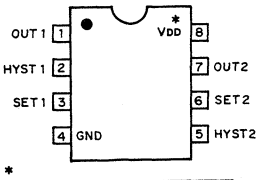

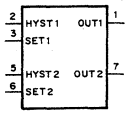

(HYST:HYSTERESIS)

*

TYPE	VDD
ICL7665ACPA ICL7665BCPA	+ 1.8 to + 10V
ICL7665ACSA ICL7665SCPA	+ 1.6 to + 16V

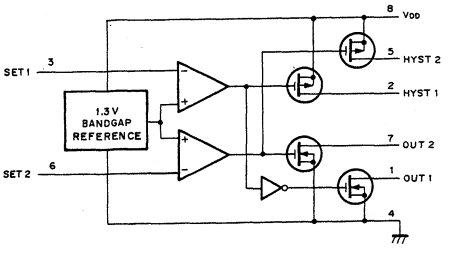

LM1881N (NS)

VIDEO SYNC SEPARATOR
– TOP VIEW –

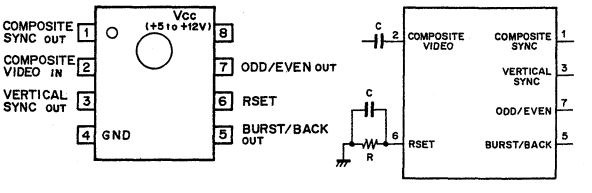

TIMING CHART

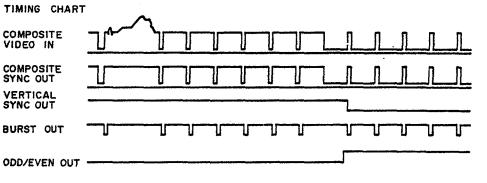

M27C256B-15F1 (SGS)

C-MOS 256K (32K × 8)-BIT UV ERASABLE PROM WITH 3-STATE OUTPUTS
– TOP VIEW –

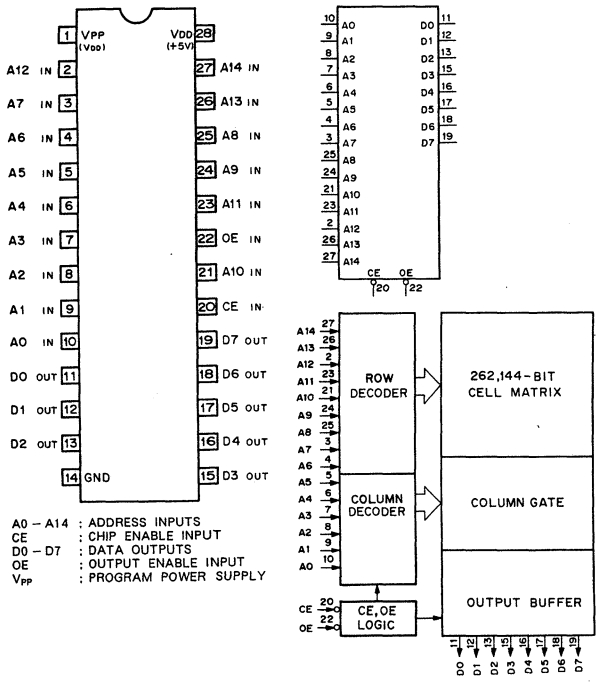

A0 – A14 : ADDRESS INPUTS
CE : CHIP ENABLE INPUT
D0 – D7 : DATA OUTPUTS
OE : OUTPUT ENABLE INPUT
V_{PP} : PROGRAM POWER SUPPLY

M27C4002-10F1 (SGS)
M27C4002-12F1 (SGS)

C-MOS 4M (256k × 16)-BIT UV EPROM
– TOP VIEW –

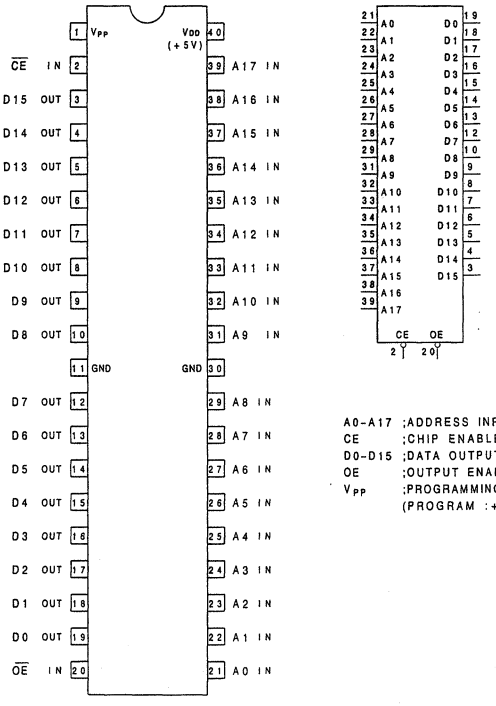

A0-A17 ;ADDRESS INPUTS
CE ;CHIP ENABLE
D0-D15 ;DATA OUTPUTS
OE ;OUTPUT ENABLE
V_{PP} ;PROGRAMMING VOLTAGE (PROGRAM :+12.75V)

An	CE	OE	VDD	Vpp	Dn	FUNCTION
An	0	0	+5V	+5V	DOUT	READ
An	0	1	+5V	+5V	HI-Z	OUTPUT DISABLE
X	1	X	+5V	+5V	HI-Z	STANDBY
An	0	1	+6V	+12.5V	DIN	PGM
An	1	0	+6V	+12.5V	DOUT	PGM VERIFY(1)
An	0	0	+6V	+12.5V	DOUT	PGM VERIFY(2)
X	1	1	+6V	+12.5V	HI-Z	PGM INH
A0	0	0	+5V	+5V	DEVICE CODE	ELECTRONIC SIGNATURE*

0:LOW LEVEL
1:HIGH LEVEL
X:DON'T CARE
HI-Z:HIGH IMPEDANCE

*SEE FOLLOWING DESCRIPTION.

ELECTRONIC SIGNATURE FOR P ROM WRITER

ADDRESS SETTINGS IN READ MODE

A1 – A8	A9	A10–A13	A14,Vpp
0	12V	0	1

	A0	CODE DATA D7	D6	D5	D4	D3	D2	D1	D0	
MAKER CODE	0	0	0	0	0	0	1	0	0	04H
DEVICE CODE	1	0	1	1	0	0	0	1	0	62H

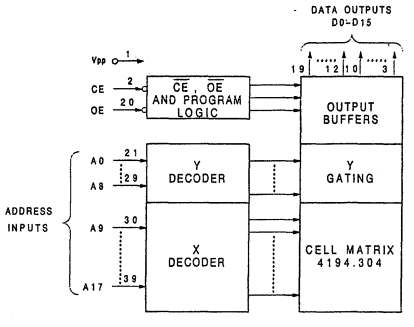

ABOVE DIAGRAM SHOWS CONDITIONS BEFORE PROGRAMMING.

CE	OE	A9	VPP	OUTPUT	FUNCTION
0	0	×	×	DOUT	READ
0	1	×	×	HI-Z	OUTPUT DISABLE
0	1	×	VPP	DIN	PROGRAM
1	0	×	VPP	DOUT	VERIFY
1	1	×	VPP	HI-Z	PROGRAM INHIBIT
1	×	×	×	HI-Z	STANDBY
0	0	VH	VDD	CODE	ELECTRONIC SIGNATURE

1 : HIGH LEVEL
0 : LOW LEVEL
× : DON'T CARE
HI-Z : HIGH IMPEDANCE
VH : 12.0 ± 0.5 V

MAX238CNG (MAXIM)

+5V POWER RS-232 DRIVERS/RECEIVERS

– TOP VIEW –

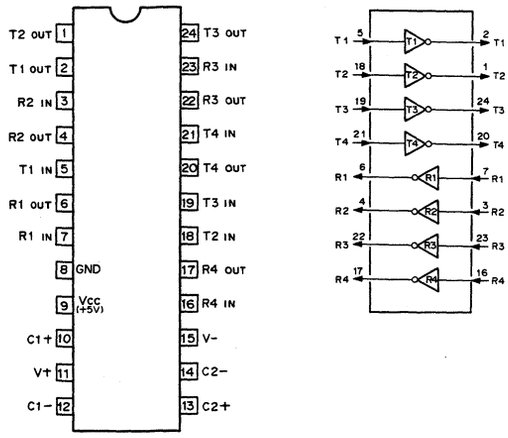

MC34051M (MOTOROLA)
MC34051P (MOTOROLA)

RS-422 DRIVER/RECEIVER

– TOP VIEW –

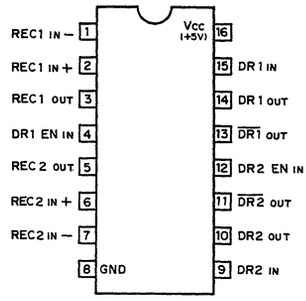

DR EN	MODE
0	DISABLE
1	ENABLE

0 ; LOW LEVEL
1 ; HIGH LEVEL

DR ; DRIVER
DR EN ; DRIVER ENABLE
REC ; RECEIVER

DRIVER CIRCUIT

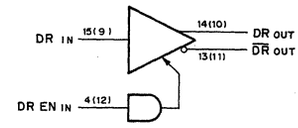

RECEIVER CIRCUIT

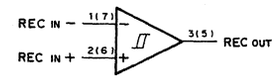

MB8421-90LPFQ (FUJITSU) (ACCESS TIME = 90nS) FLAT PACKAGE

C-MOS 16384 (2Kx8) BIT DUAL PORT STATIC RAM

– TOP VIEW –

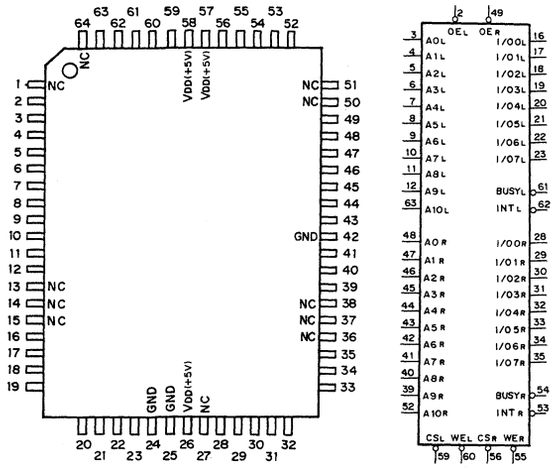

A0L – A10L, A0R – A10R : ADDRESS INPUTS
I/O0L – I/O7L, I/O0R – I/O7R : DATA INPUTS/OUTPUTS
CSL, CSR : CHIP SELECT INPUT
WEL, WER : WRITE ENABLE INPUT
OEL, OER : OUTPUT ENABLE INPUT
BUSYL, BUSYR : BUSY OUTPUT
INTL, INTR : INTERRUPT OUTPUT

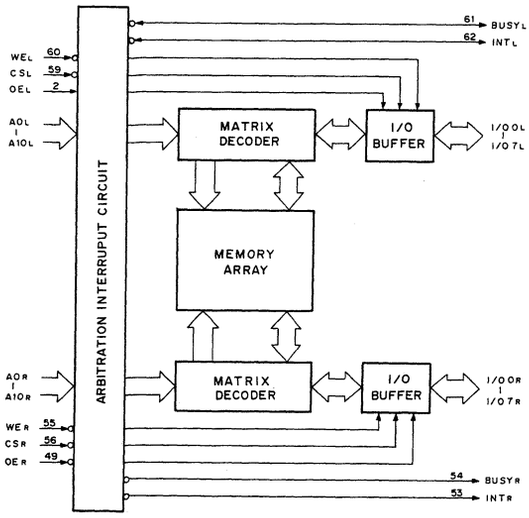

MC74F08M (MOTOROLA) FLAT PACKAGE

TTL 2-INPUT POSITIVE-AND GATE

– TOP VIEW –

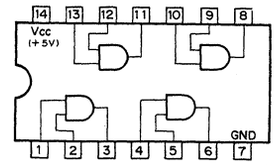

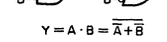

$Y = A \cdot B = \overline{\overline{A} + \overline{B}}$

A	B	Y
0	0	0
0	1	0
1	0	0
1	1	1

0; LOW LEVEL
1; HIGH LEVEL

MC74F21M (MOTOROLA) FLAT PACKAGE

TTL 4-INPUT POSITIVE AND GATE

– TOP VIEW –

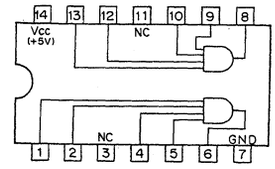

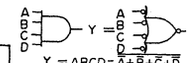

$Y = ABCD = \overline{\overline{A+B+C+D}}$

A	B	C	D	Y
0	0	0	0	0
0	0	0	1	0
0	0	1	0	0
0	0	1	1	0
0	1	0	0	0
⋮	⋮	⋮	⋮	⋮
1	1	0	1	0
1	1	1	0	0
1	1	1	1	1

0; LOW LEVEL
1; HIGH LEVEL

MB8431-90LPFQ (FUJITSU)

C-MOS 16K (2048x8)-BIT DUAL PORT STATIC RAM
– TOP VIEW –

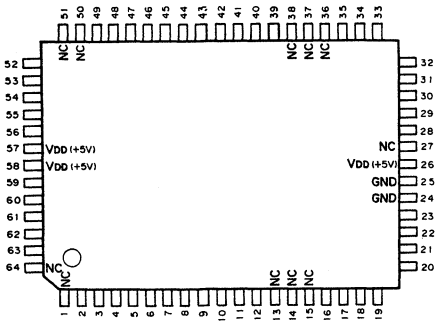

PIN No.	I/O	SIGNAL	PIN No.	I/O	SIGNAL	PIN No.	I/O	SIGNAL	PIN No.	I/O	SIGNAL
1	–	NC	17	I/O	I/O1L	33	I/O	I/O5R	49	I	OER
2	I	OEL	18	I/O	I/O2L	34	I/O	I/O6R	50	–	NC
3	I	A0L	19	I/O	I/O3L	35	I/O	I/O7R	51	–	NC
4	I	A1L	20	I/O	I/O4L	36	–	NC	52	I	A10R
5	I	A2L	21	I/O	I/O5L	37	–	NC	53	O	INTR
6	I	A3L	22	I/O	I/O6L	38	–	NC	54	I	BUSYR
7	I	A4L	23	I/O	I/O7L	39	I	A9R	55	I	WER
8	I	A5L	24	–	GND	40	I	A8R	56	I	CSR
9	I	A6L	25	–	GND	41	I	A7R	57	–	VDD
10	I	A7L	26	–	VDD	42	I	A6R	58	–	VDD
11	I	A8L	27	–	NC	43	I	A5R	59	I	CSL
12	I	A9L	28	I/O	I/O0R	44	I	A4R	60	I	WEL
13	–	NC	29	I/O	I/O1R	45	I	A3R	61	I	BUSYL
14	–	NC	30	I/O	I/O2R	46	I	A2R	62	O	INTL
15	–	NC	31	I/O	I/O3R	47	I	A1R	63	I	A10L
16	I/O	I/O0L	32	I/O	I/O4R	48	I	A0R	64	–	NC

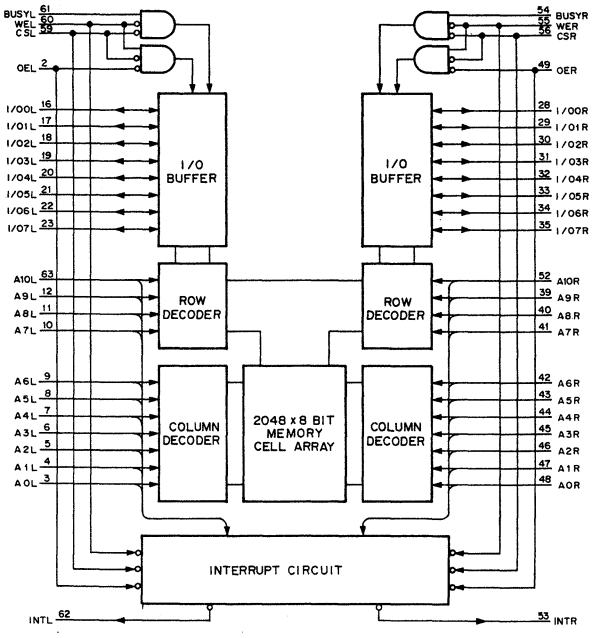

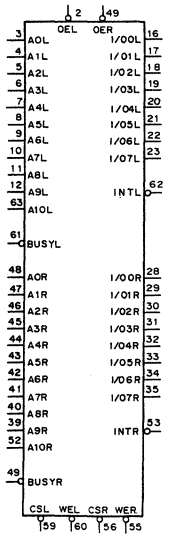

AOL – A10L,
AOR – A10R ; ADDRESS INPUTS
BUSYL, BUSYR ; BUSY INPUTS
CSL, CSR ; CHIP SELECT INPUTS
I/O0L – I/O10L,
I/O0R – I/O10R ; DATA INPUTS/OUTPUTS
INTL, INTR ; INTERRUPT OUTPUTS
OEL, OER ; OUTPUT ENABLE INPUTS
WEL, WER ; WRITE ENABLE INPUTS

MC74F803N (MOTOROLA)

TTL INVERTING D-TYPE FLIP FLOP
– TOP VIEW –

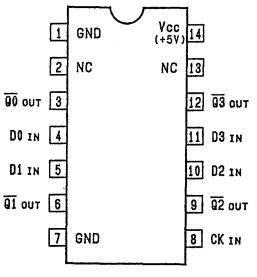

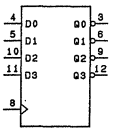

INPUTS		OUTPUTS
CK	D	Q
↑	0	1
	1	0

0;LOW LEVEL
1;HIGH LEVEL

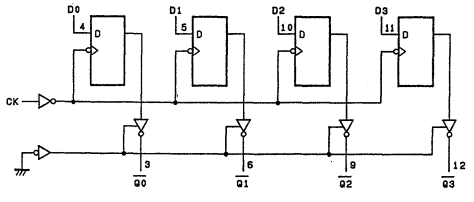

MC68302FC16 (MOTOROLA) FLAT PACKAGE
MC68302FC16C (MOTOROLA) FLAT PACKAGE

C-MOS INTEGRATED MULTIPROTOCOL PROCESSOR
– BOTTOM VIEW –

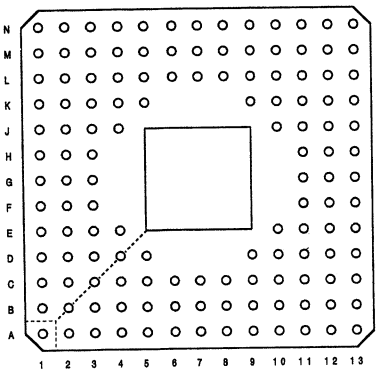

(VDD = +5V)

PIN NO.	I/O	SYMBOL	PIN NO.	I/O	SYMBOL	PIN NO.	I/O	SYMBOL	PIN NO.	I/O	SYMBOL
1A	I/O	A14	3H	I/O	FC1	7L	O	XTAL	11G	I/O	PA12
1B	I/O	A11	3J	–	GND	7M	–	GND	11H	I	$\overline{FRZ}$
1C	I/O	A10	3K	O	IAC	7N	I	EXTAL	11J	–	NC
1D	I/O	A7	3L	–	GND	8A	I/O	D9	11K	O	TXD1
1E	I/O	A6	3M	I/O	TIN2	8B	I/O	D8	11L	I/O	$\overline{BCLR}$
1F	–	GND	3N	I/O	$\overline{IACK1}$	8C	–	VDD	11M	I/O	$\overline{BGACK}$
1G	I/O	A1	4A	–	GND	8L	I	$\overline{IPL0}$	11N	I/O	$\overline{RESET}$
1H	I/O	FC0	4B	I/O	A20	8M	I	CLKO	12A	I/O	D3
1J	I/O	FC2	4C	–	GND	8N	–	VDD	12B	I	$\overline{CTS3}$
1K	O	$\overline{CS0}$	4D	I/O	A15	9A	I/O	D7	12C	I/O	RCLK2
1L	O	$\overline{CS2}$	4E	–	VDD	9B	I/O	D5	12D	–	GND
1M	O	$\overline{CS3}$	4J	I/O	PB8	9C	I/O	D4	12E	I/O	SDS2
1N	I/O	PB10	4K	I/O	PB9	9D	I/O	RXD2	12F	I/O	RCLK3
2A	I/O	A21	4L	I/O	$\overline{TOUT1}$	9K	I/O	$\overline{DTACK}$	12G	I/O	$\overline{DREQ}$
2B	I/O	A18	4M	–	VDD	9L	I/O	$\overline{AVEC}$	12H	I/O	$\overline{DONE}$
2C	I/O	A13	4N	–	GND	9M	I/O	$\overline{BERR}$	12J	–	NC
2D	–	GND	5A	I/O	D15	9N	I	$\overline{IPL1}$	12K	O	$\overline{RTS1}$
2E	I/O	A8	5B	–	VDD	10A	I/O	D6	12L	I/O	TCLK1
2F	I/O	A4	5C	I/O	A23	10B	I/O	D2	12M	I/O	$\overline{BG}$
2G	I/O	A3	5D	I/O	A16	10C	I/O	D1	12N	I/O	$\overline{HALT}$
2H	–	VDD	5K	I/O	$\overline{WDOG}$	10D	I	$\overline{CTS1}$	13A	I/O	RXD1
2J	O	$\overline{CS1}$	5L	I/O	$\overline{IACK6}$	10E	I/O	TXD2	13B	I	$\overline{CTS2}$
2K	O	$\overline{RMC}$	5M	I/O	$\overline{IACK7}$	10J	–	GND	13C	I/O	$\overline{RTS2}$
2L	I/O	PB11	5N	I/O	$\overline{UDS}$	10K	–	VDD	13D	–	VDD
2M	I/O	$\overline{TOUT2}$	6A	I/O	D12	10L	–	NC	13E	I/O	RXD3
2N	I/O	TIN1	6B	I/O	D13	10M	I/O	$\overline{BR}$	13F	I/O	TCLK3
3A	I/O	A22	6C	I/O	D14	10N	I	$\overline{IPL2}$	13G	–	GND
3B	I/O	A19	6L	I/O	LDS	11A	–	GND	13H	I/O	$\overline{DACK}$
3C	I/O	A17	6M	I/O	$\overline{AS}$	11B	I/O	D0	13J	I	DISCPU
3D	I/O	A12	6N	I/O	R/$\overline{W}$	11C	I	$\overline{CD1}$	13K	I	BUSW
3E	I/O	A9	7A	–	GND	11D	I/O	TCLK2	13L	I/O	$\overline{CD3}$
3F	I/O	A5	7B	I/O	D10	11E	I/O	$\overline{CD2}$	13M	O	$\overline{RTS3}$
3G	I/O	A2	7C	I/O	D11	11F	I/O	TXD3	13N	I/O	RCLK1

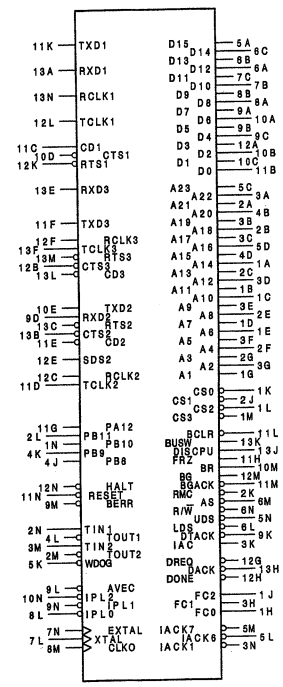

INPUT

BUSW	;BUS WIDTH SELECT
CD1	;CARRIER DETECT 1
$\overline{CTS1}$ - $\overline{CTS3}$	;CLEAR-TO-SEND 1-3
DISCPU	;DISABLE CPU
EXTAL	;EXTERNAL CLOCK/CRYSTAL INPUT
$\overline{FRZ}$	;FREEZE ACTIVITY
$\overline{IPL0}$ - $\overline{IPL2}$	;INTERRUPT CONTROL
RXD1	;RECEIVE DATA

OUTPUT

CLKO	;CLOCK OUT
$\overline{CS0}$ - $\overline{CS3}$	;CHIP SELECT 0-3
IAC	;INTERNAL ACCESS
$\overline{RMC}$	;READ-MODIFY-WRITE
$\overline{RTS1}$ - $\overline{RTS3}$	;REQUFST-TO-SEND 1-3
TXD1	;TRANSMIT DATA
XTAL	;CRYSTAL OUTPUT

INPUT/OUTPUT

A1-A23	;ADDRESS BUS
$\overline{AS}$	;ADDRESS STROBE
$\overline{AVEC}$	;AUTO VECTOR
$\overline{BCLR}$	;BUS CLEAR
$\overline{BERR}$	;BUS ERROR
$\overline{BG}$	;BUS GRANT
$\overline{BGACK}$	;BUS GRANT ACKNOWLEDGE
$\overline{BR}$	;BUS REQUEST
$\overline{CD2}$, $\overline{CD3}$	;CARRIER DETECT 2,3
$\overline{CTS2}$	;CLEAR-TO-SEND 2
D0-D15	;DATA BUS
$\overline{DACK}$	;DMA ACKNOWLEDGE
$\overline{DONE}$	;DONE
$\overline{DREQ}$	;DMA REQUEST
$\overline{DTACK}$	;DATA TRANSFER ACKNOWLEDGE
FC0-FC2	;FUNCTION CODES 0-2
$\overline{HALT}$	;HALT
$\overline{IACK1}$, $\overline{IACK6}$, $\overline{IACK7}$	;INTERRUPT ACKNOWLEDGE 1,6,7
$\overline{LDS}$	;LOWER DATA STROBE
PA12	;BIT 12 OF PORT A
PB8-PB11	;PARALLEL INPUT/OUTPUT
RCLK1-RCLK3	;RECEIVE CLOCK 1-3
$\overline{RESET}$	;RESET
R/$\overline{W}$	;READ/WRITE
RXD2,RXD3	;RECEIVE DATA
$\overline{RTS2}$	;REQUEST-TO-SEND 2
SDS2	;SERIAL DATA STROBE 2
TCLK1-TCLK3	;TRANSMIT CLOCK
TIN1,TIN2	;TIMER 1,2 INPUT
$\overline{TOUT1}$, $\overline{TOUT2}$	;TIMER 1,2 OUTPUT
TXD2,TXD3	;TRANSMIT 2,3 DATA
$\overline{UDS}$	;UPPER DATA STROBE
WDOG	;WATCH DOG OUTPUT

MC74HC259N (MOTOROLA)
SN74HC259AN (TI)
SN74HC259ANS (TI) FLAT PACKAGE

C-MOS 8-BIT ADDRESSABLE LATCHES
– TOP VIEW –

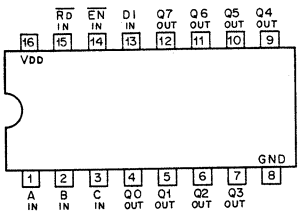

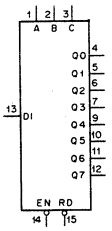

MODE SELECTION

CONTROL INPUTS		OUTPUT OF ADDRESSED LATCH	OUTPUT OF EACH OTHER LATCH
Ro	EN		
1	0	D1	Qno
1	1	Qno	Qno
0	0	D1	0
0	1	0	0

0 ; LOW LEVEL
1 ; HIGH LEVEL

LATCH SELECTION

CONTROL INPUTS			LATCH ADDRESSED
C	B	A	
0	0	0	0
0	0	1	1
0	1	0	2
0	1	1	3
1	0	0	4
1	0	1	5
1	1	0	6
1	1	1	7

NOTE :

TYPE	VDD
TC40H	+2 to +8V
OTHERS	+2 to +6V

MC74HC390F (MOTOROLA) FLAT PACKAGE
MC74HC390N (MOTOROLA)
TC74HC390P (TOSHIBA)

C-MOS DIVIDE-BY-2 AND DIVIDE-BY-5 COUNTER
– TOP VIEW –

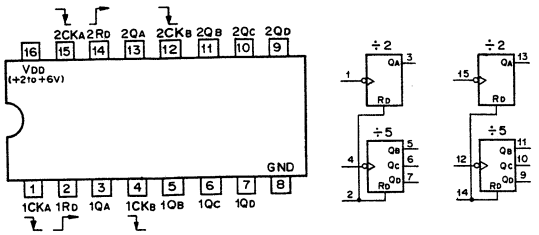

COUNT SEQUENCE
÷2 SECTION

COUNT	QA
0	0
1	1

÷5 SECTION

COUNT	QD	QC	QB
0	0	0	0
1	0	0	1
2	0	1	0
3	0	1	1
4	1	0	0

RESET/COUNT FUNCTION

RD	QD	QC	QB	QA
1	0	0	0	0
0	COUNT			

0 ; LOW LEVEL
1 ; HIGH LEVEL

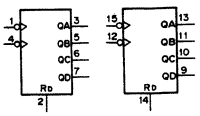

MC74HC4075N (MOTOROLA)
SN74HC4075AN (TI)

C-MOS 3-INPUT OR GATE
– TOP VIEW –

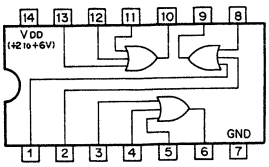

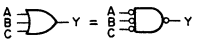

C	B	A	Y
0	0	0	0
X	X	1	1
X	1	X	1
1	X	X	1

0 ; LOW LEVEL
1 ; HIGH LEVEL
X ; DON'T CARE

MC74HC540N (MOTOROLA)
SN74HC540AN (TI)
SN74HC540ANS (TI) FLAT PACKAGE

C-MOS 3-STATE INVERTING BUFFER/LINE DRIVER/LINE RECEIVER
– TOP VIEW –

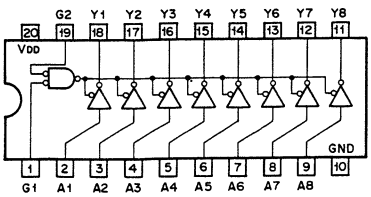

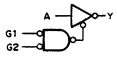

G1	G2	A	Y
0	0	0	1
0	0	1	0
1	X	X	HI-Z
X	1	X	HI-Z

0 ; LOW LEVEL
1 ; HIGH LEVEL
X ; DON'T CARE
HI-Z ; HIGH IMPEDANCE

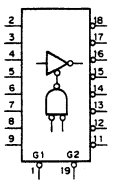

NOTE :

TYPE	VDD
ACT/HCT	+5V
TC74AC540 TYPE TC74VHC540	+2 to +5.5V
OTHER TYPES	+2 to +6V

MC7805CT (MOTOROLA) + 5V
MC7815CT (MOTOROLA) + 15V
UPC7805H (NEC) + 5V

POSITIVE VOLTAGE REGULATOR (1A)
– SIDE VIEW –

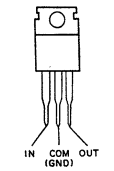

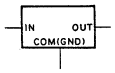

MC7915CT (MOTOROLA) – 15V
TA79005S (TOSHIBA) – 5V
TA79015S (TOSHIBA) – 15V

NEGATIVE VOLTAGE REGULATOR (1A)
– SIDE VIEW –

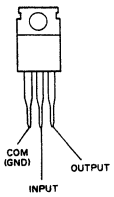

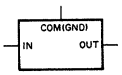

NE5532P (TI)

LOW NOISE OPERATIONAL AMPLIFIER
– TOP VIEW –

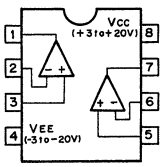

NJM7812FA (JRC) + 12V

POSITIVE VOLTAGE REGULATOR (500mA)
– FRONT VIEW –

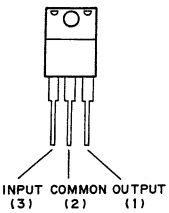

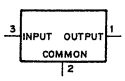

NJM78L05A (JRC) + 5V (100mA)

POSITIVE VOLTAGE REGULATOR

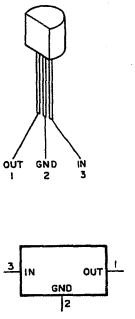

NJM7912FA (JRC)-12V

NEGATIVE VOLTAGE REGULATOR (500mA)

– FRONT VIEW –

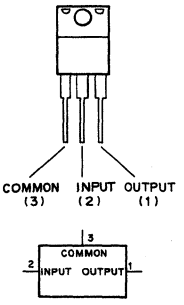

NJM79L05A (JRC) – 5V

NEGATIVE VOLTAGE REGULATOR (100mA)

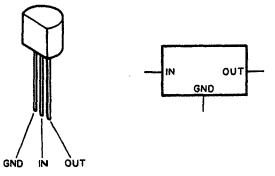

PCM1760P (BURR-BROWN)

20-BIT A/D CONVERSION SYSTEM

– TOP VIEW –

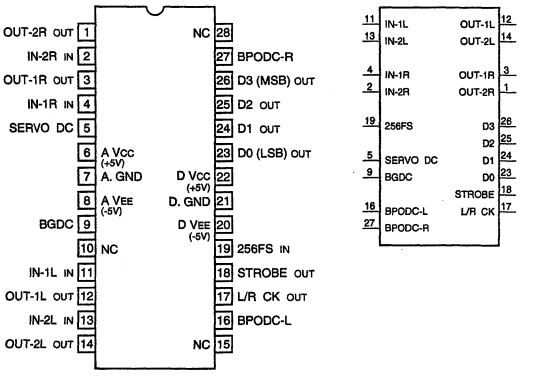

INPUT

IN-1L	; Lch FIRST STAGE AMP
IN-1R	; Rch FIRST STAGE AMP
IN-2L	; Lch SECOND STAGE AMP
IN-2R	; Rch SECOND STAGE AMP
256FS	; SYSTEM CLOCK

OUTPUT

D0 - D3	; DATA OUTPUTS
L/R CK	; L/R CLOCK (64FS)
STROBE	; DATA STROBE
OUT-1L	; Lch FIRST STAGE AMP
OUT-1R	; Rch FIRST STAGE AMP
OUT-2L	; Lch SECOND STAGE AMP
OUT-2R	; Rch SECOND STAGE AMP

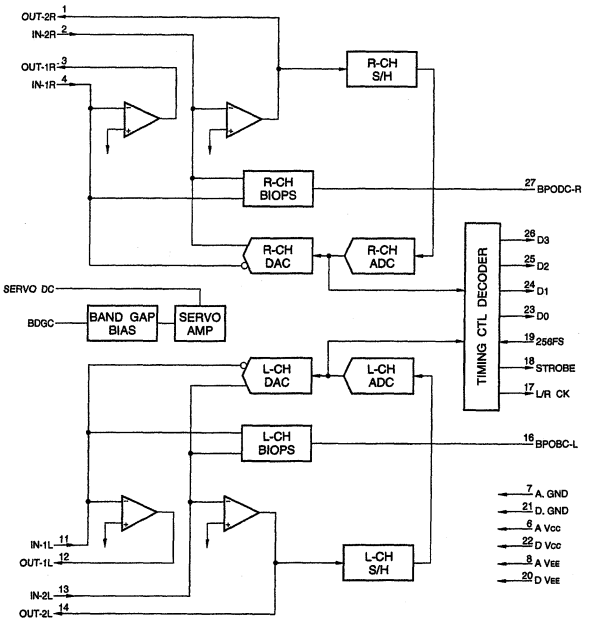

PCM63P-K (BURR-BROWN)

20-BIT SERIAL D/A CONVERTER
– TOP VIEW –

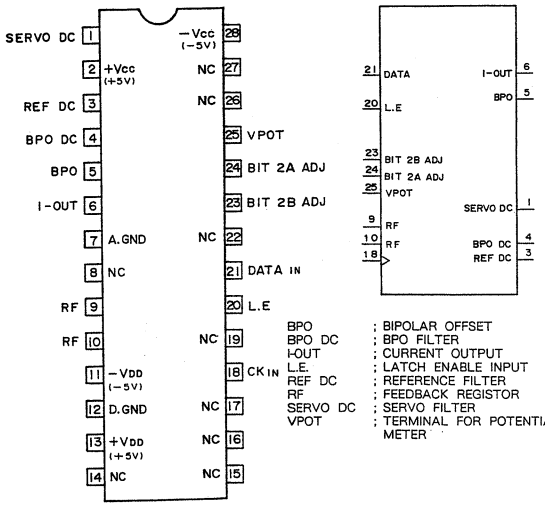

BPO ; BIPOLAR OFFSET
BPO DC ; BPO FILTER
I-OUT ; CURRENT OUTPUT
L.E. ; LATCH ENABLE INPUT
REF DC ; REFERENCE FILTER
RF ; FEEDBACK REGISTOR
SERVO DC ; SERVO FILTER
VPOT ; TERMINAL FOR POTENTIAL METER

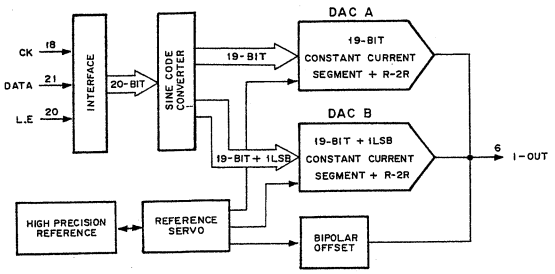

PCM69AP (BURR-BROWN)

C-MOS DUAL 18-BIT D/A CONVERTER
– TOP VIEW –

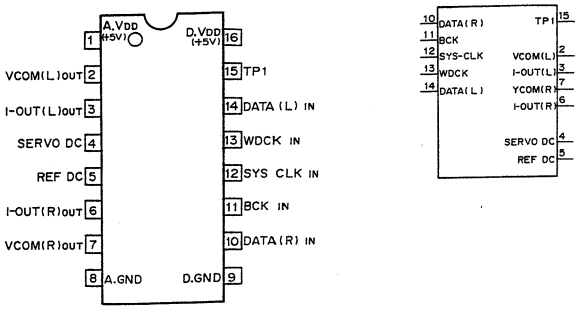

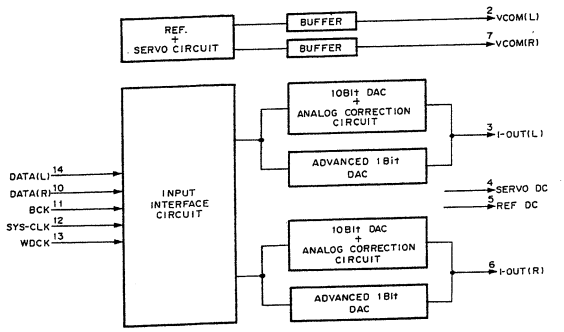

RC4558P (RAYTHEON)
UPC4558C (NEC)

DUAL OPERATIONAL AMPLIFIER
– TOP VIEW –

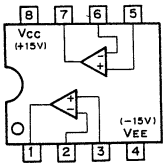

SM5813APT (NPC)

C-MOS AUDIO DIGITAL FILTER
– TOP VIEW –

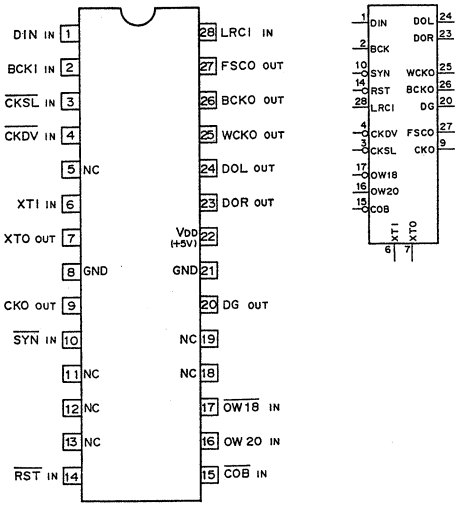

INPUT

BCKI ; INPUT DATA BIT CLOCK
CKDV, CKSL ; SYSTEM CLOCK SELECT
COB ; 2'S COMPLEMENT/COB SELECT (H : 2'S COMPLEMENT, L : COB)
DIN ; INPUT DATA
LRCI ; SYSTEM CLOCK (H : L-CH, L : R-CH)
OW18, 20 ; OUTPUT BIT NUMBER SELECT

OUTPUT BIT	16	18	20
OW18	H	L	H
OW20	H	H	L

RST ; SYSTEM RESET (H : NORMAL, L : SYSTEM RESET)
SYN ; JITTER FREE/FORCED SYNCHRONIZATION SELECT (H : JITTER FREE, L : FORCED SYNCHRONIZATION)
XTI ; OSCILLATOR

XTI	125fs	256fs	384fs	512fs
CKSL	H	L	H	L
CKDV	H	H	L	L

OUTPUT

BCKO ; OUTPUT DATA BIT CLOCK
CKO ; SYSTEM CLOCK
DG ; DEGLITCH CONTROL CLOCK
DOL, DOR ; L, R DATA
FSCO ; DATA SAMPLING CLOCK
WCKO ; OUTPUT WORD CLOCK
XTO ; OSCILLATOR

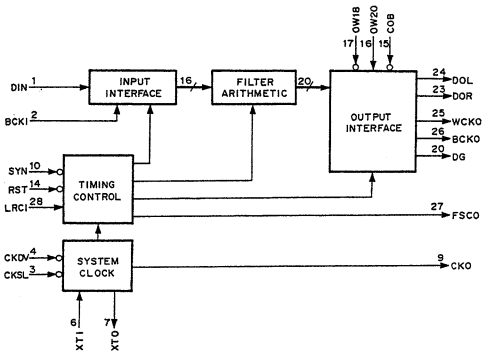

SM583AP1
SM5842APT (NPC)

C-MOS 8TIMES OVER SAMPLING DIGITAL FILTER FOR DIGITAL AUDIO
– TOP VIEW –

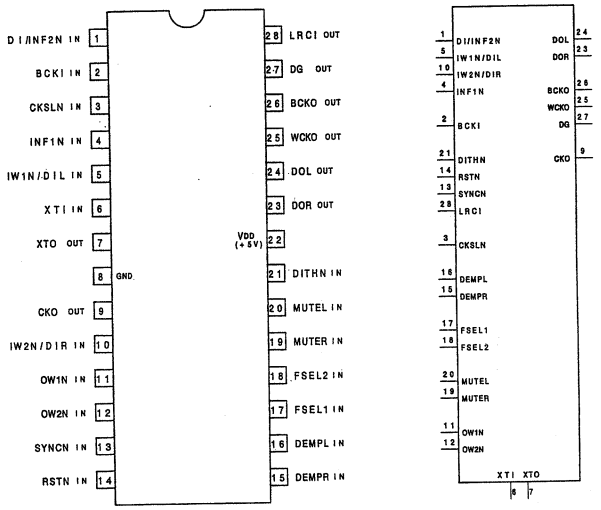

INPUT

BCKI ;INPUT BIT CLOCK
CKSLN ;OSCILLATE AND INPUT FREQUENCY SELECT (H;384 fs, L;256 fs)
DEMPL ;Lch DEEMPHASIS SIGNAL (L;OFF, H;ON)
DEMPR ;Rch DEEMPHASIS SIGNAL (L;OFF, H;ON)
DI/INF2N;INPUT DATA (INF1N=L)/INPUT FORMAT SELECT 2 (INF1N=H)
DITHN ;DITHER ON/OFF SELECT (L;ON, H;OFF)
FSEL1 ;DEEMPHASIS FILTER SELECT 1
FSEL2 ;DEEMPHASIS FILTER SELECT 2

fs(Hz)	32k	44.1k	48k
FSEL1	H	L	L
FSEL2	H	L	H

INF1N ;INPUT FORMAT SELECT 1

	TERMINAL	INPUT FORMAT		
		LR MUTUALLY BELOW STUFFING	LR MUTUALLY ABOVE STUFFING	LR SIMULTANEOUSLY ABOVE STUFFING
SETTING	INF1N	L	H	
	INF2N	DI TERMINAL	L	H
TERMINAL FUNCTION	NO.1	DI	INF2N	
	NO.5	IW1N	DIL	
	NO.10	IW2N	DIR	

IW1N/DIL;INPUT WORD LENGTH SELECT 1 (INF1N=L)/Lch DATA INPUT (INF1N=H)
IW2N/DIR;INPUT WORD LENGTH SELECT 2 (INF1N=L)/Rch INPUT DATA (INF1N=H)

INPUT FORMAT		LR MUTUALLY BELOW STUFFING				LR MUTUALLY ABOVE STUFFING	LR SIMULTANEOUSLY ABOVE STUFFING
INPUT WORD LENGTH(BIT)		16	18	20	24	24	
5	IW1N/DIL	H	L	H	L	(USED AS DIL TERMINAL)	
10	IW2N/DIR	H	H	L	L	(USED AS DIR TERMINAL)	
4	INF1N	L				H	
1	INF2N/DI	(USED AS DI TERMINAL)				L	H

MUTEL ;MUTE SIGNAL Lch (L;NORMAL OUTPUT,H;MUTING)
MUTER ;MUTE SIGNAL Rch (L;NORMAL OUTPUT,H;MUTING)
OW1N ;OUTPUT WORD LENGTH SELECT 1
OW2N ;OUTPUT WORD LENGTH SELECT 2

OUTPUT WORD LENGTH(BIT)		18	20	22	24
SETTING	OW1N	H	L	H	L
	OW2N	H	H	L	L

RSTN ;SYSTEM RESET (L;SYSTEM RESET, H;NORMAL OPERATION)
SYNCN ;SYNCHRONIZATION MODE SELECT
(L;FORCED SYNCHRONIZATION MODE, H;JITTER FREE MODE)
XTI ;OSCILLATOR INPUT TERMINAL

OUTPUT

BCKO ;OUTPUT BIT CLOCK
CKO ;OSCILLATOR BLOCK OUTPUT CLOCK
DG ;DEGLITCH OUTPUT
DOL ;Lch DATA OUTPUT
DOR ;Rch DATA OUTPUT
LRCI ;INPUT DATA SAMPLING RATE(fs) CLOCK
WCKO ;OUTPUT WORD CLOCK
XTO ;OSCILLATOR OUTPUT TERMINAL

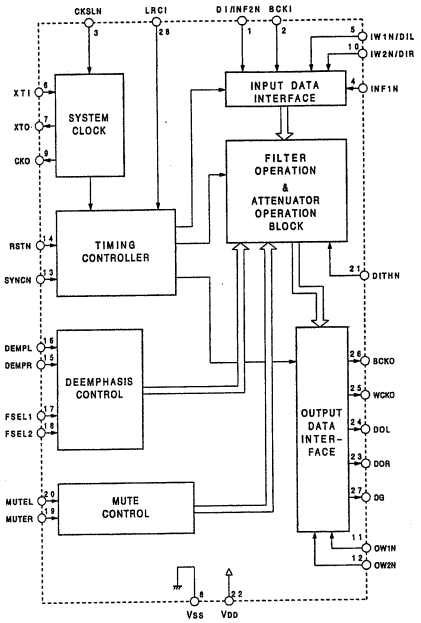

SN74HC00AN (TI)
SN74HC00ANS (TI) FLAT PACKAGE

C-MOS QUAD 2-INPUT NAND GATES
– TOP VIEW –

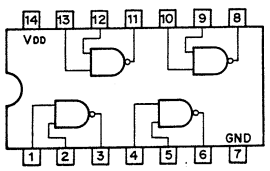

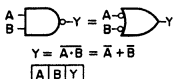

A	B	Y
0	0	1
0	1	1
1	0	1
1	1	0

0;LOW LEVEL
1;HIGH LEVEL

NOTE :

TYPE	VDD
TC74AC00 TYPE TC74VHC00	+2 to +5.5V
MC74HCT00N	+5V
74ACT00 TYPE	+4.5 to +5.5V
OTHER TYPES	+2 to +6V

SN74HC02ANS (TI) FLAT PACKAGE

C-MOS QUAD 2-INPUT NOR GATES
– TOP VIEW –

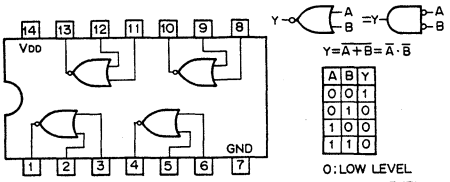

A	B	Y
0	0	1
0	1	0
1	0	0
1	1	0

0:LOW LEVEL
1;HIGH LEVEL

NOTE :

TYPE	VDD
TC74AC02F	+2 to +5.5V
74ACT02SJ TC74ACT02F	+4.5 to +5.5V
OTHER TYPES	+2 to +6V

SN74HC132ANS (TI) FLAT PACKAGE

C-MOS 2-INPUT NAND SCHMITT TRIGGER
– TOP VIEW –

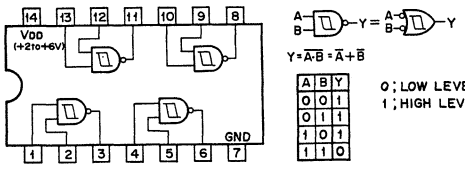

A	B	Y
0	0	1
0	1	1
1	0	1
1	1	0

0 ; LOW LEVEL
1 ; HIGH LEVEL

SN74HC10AN (TI)

C-MOS 3-INPUT NAND GATE
– TOP VIEW –

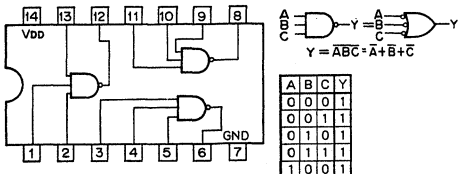

A	B	C	Y
0	0	0	1
0	0	1	1
0	1	0	1
0	1	1	1
1	0	0	1
1	0	1	1
1	1	0	1
1	1	1	0

0 ; LOW LEVEL
1 ; HIGH LEVEL

NOTE :

TYPE	VDD
TC40H	+ 2 to + 8V
OTHERS	+ 2 to + 6V

SN74HC138ANS (TI) FLAT PACKAGE

C-MOS 3-TO-8 LINE DECODER/DEMULTIPLEXER
– TOP VIEW –

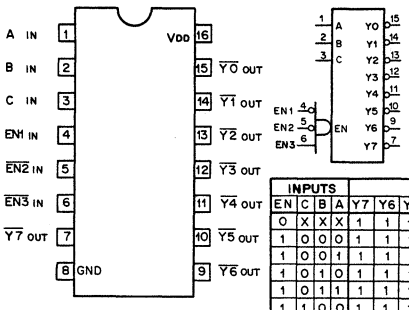

INPUTS				OUTPUTS							
EN	C	B	A	Y7	Y6	Y5	Y4	Y3	Y2	Y1	Y0
0	X	X	X	1	1	1	1	1	1	1	1
1	0	0	0	1	1	1	1	1	1	1	0
1	0	0	1	1	1	1	1	1	1	0	1
1	0	1	0	1	1	1	1	1	0	1	1
1	0	1	1	1	1	1	1	0	1	1	1
1	1	0	0	1	1	1	0	1	1	1	1
1	1	0	1	1	1	0	1	1	1	1	1
1	1	1	0	1	0	1	1	1	1	1	1
1	1	1	1	0	1	1	1	1	1	1	1

EN = $\overline{EN1}\cdot\overline{EN2}\cdot EN3$

0 ; LOW LEVEL
1 ; HIGH LEVEL
X ; DON'T CARE

NOTE :

TYPE	VDD
74HCT138 TYPE	+5V
74ACT138 TYPE	+4.5 to +5.5V
TC74AC138 TYPE TC74VHC138	+2 to +5.5V
OTHER TYPES	+2 to +6V

SN74HC125ANS (TI) FLAT PACKAGE

C-MOS BUS BUFFER GATES WITH 3-STATE OUTPUT
– TOP VIEW –

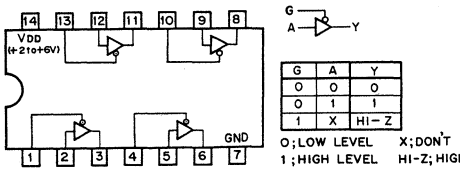

G	A	Y
0	0	0
0	1	1
1	X	HI-Z

0;LOW LEVEL X;DON'T CARE
1;HIGH LEVEL HI-Z;HIGH IMPEDANCE

SN74HC139ANS (TI) FLAT PACKAGE

C-MOS DUAL 2-TO-4 DECODER/DEMULTIPLEXER
– TOP VIEW –

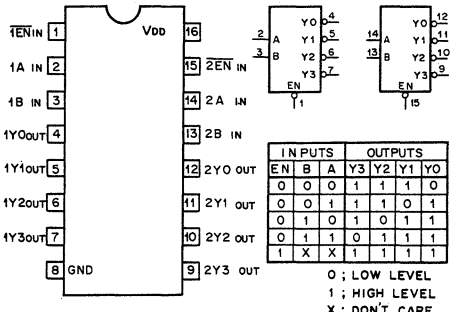

INPUTS			OUTPUTS			
EN	B	A	Y3	Y2	Y1	Y0
0	0	0	1	1	1	0
0	0	1	1	1	0	1
0	1	0	1	0	1	1
0	1	1	0	1	1	1
1	X	X	1	1	1	1

0 ; LOW LEVEL
1 ; HIGH LEVEL
X ; DON'T CARE

NOTE :

TYPE	VDD
74AC/74HC	+2 to +6V
74ACT	+5V
TC74AC139	+2 to +5.5V

SN74HC126ANS (TI) FLAT PACKAGE

C-MOS BUS BUFFER GATES WITH 3-STATE OUTPUT
– TOP VIEW –

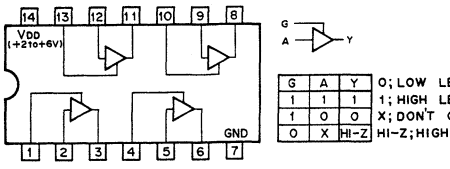

G	A	Y
1	1	1
1	0	0
0	X	HI-Z

0; LOW LEVEL
1; HIGH LEVEL
X; DON'T CARE
HI-Z; HIGH IMPEDANCE

SN74HC14AN (TI)
SN74HC14ANS (TI) FLAT PACKAGE

C-MOS HEX SCHMITT TRIGGER INVERTERS
– TOP VIEW –

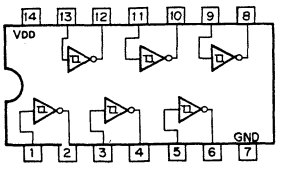

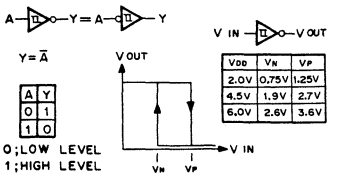

A	Y
0	1
1	0

0 ; LOW LEVEL
1 ; HIGH LEVEL

VDD	VN	VP
2.0V	0.75V	1.25V
4.5V	1.9V	2.7V
6.0V	2.6V	3.6V

NOTE :

TYPE	VDD
TC74AC14 TYPE	+2 to +5.5V
OTHER TYPES	+2 to +6V

SN74HC151ANS (TI) FLAT PACKAGE

C-MOS 8-LINE-TO-1-LINE DATA SELECTOR/MULTIPLEXER
– TOP VIEW –

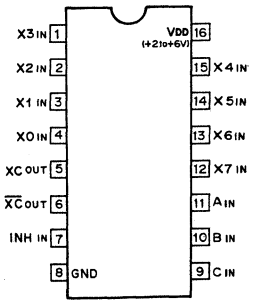

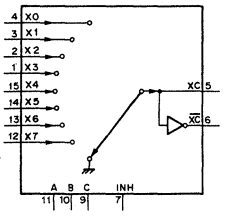

CONTROL INPUTS				ON CHANNEL
INH	C	B	A	
0	0	0	0	0
0	0	0	1	1
0	0	1	0	2
0	0	1	1	3
0	1	0	0	4
0	1	0	1	5
0	1	1	0	6
0	1	1	1	7
1	X	X	X	GND

0 ; LOW LEVEL
1 ; HIGH LEVEL
X ; DON'T CARE

SN74HC153ANS (TI) FLAT PACKAGE

C-MOS DUAL 4-LINE-TO-1-LINE DATA SELECTOR/MULTIPLEXER
– TOP VIEW –

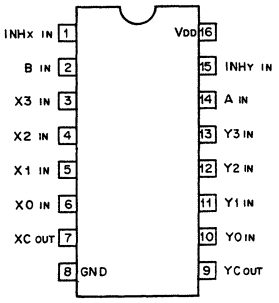

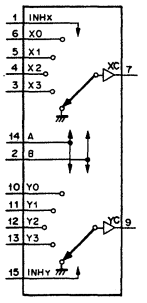

TYPE	VDD
EXCEPT FOL. TYPE	+2 to +6V
74ACT153PC 74ACT153SJ	+5V
TC74AC153P	+2 to +5.5V
TC40H	+2 to +8V

CONTROL IN			ON CHANNEL
INH	B	A	
0	0	0	0
0	0	1	1
0	1	0	2
0	1	1	3
1	X	X	GND

0 ; LOW LEVEL
1 ; HIGH LEVEL
X ; DON'T CARE

SN74HC157ANS (TI) FLAT PACKAGE

C-MOS QUAD 2-LINE-TO-1-LINE DATA SELECTOR/MULTIPLEXER
– TOP VIEW –

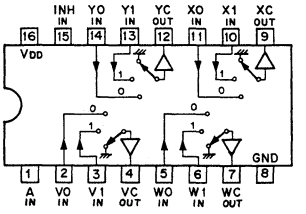

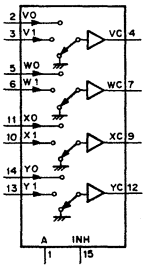

NOTE :

TYPE	VDD
74ACT157	+5V
TC74AC157P TC74AC157F	+2 to +5.5V
TC40H	+2 to +8V
OTHER TYPES	+2 to +6V

CONT. IN		ON CHANNEL
INH	A	
0	0	0
0	1	1
1	X	GND

0 ; LOW LEVEL
1 ; HIGH LEVEL
X ; DON'T CARE

SN74HC164ANS (TI) FLAT PACKAGE

C-MOS 8-BIT SERIAL-IN/PARALLEL-OUT SHIFT REGISTER
– TOP VIEW –

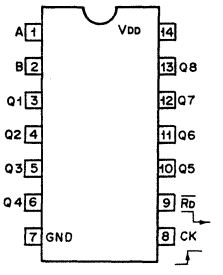

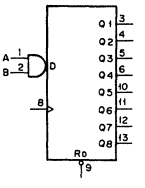

INPUTS				OUTPUTS			
RD	CK	A	B	Q1	Q2	----	Q8
0	X	X	X	0	0	0	0
1	0	X	X	Q1o	Q2o	----	Q8o
1	↑	1	1	1	Q1n	----	Q7n
1	↑	0	X	0	Q1n	----	Q7n
1	↑	X	0	0	Q1n	----	Q7n

0;LOW LEVEL
1;HIGH LEVEL
X;DON'T CARE

NOTE :

TYPE	VDD
TC74AC164 TYPE	+2 to +5.5V
OTHER TYPES	+2 to +6V

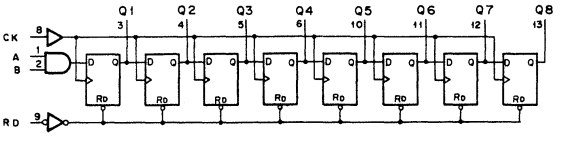

SN74HC165ANS (TI) FLAT PACKAGE

C-MOS SERIAL- OR PARALLEL-INPUT SHIFT REGISTER
– TOP VIEW –

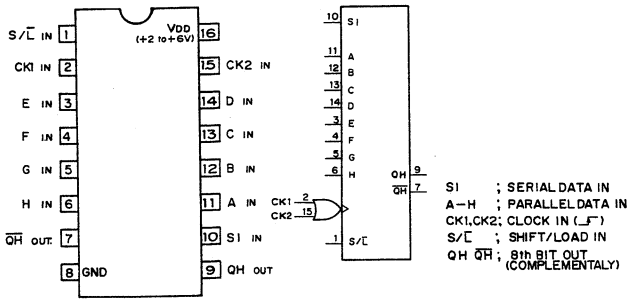

INPUTS				CONTENTS		OUTPUT	OPERATION
S/L	CK1+CK2	SI	A------H	QA	QB----	QH	
0	X	X	a------h	a	b-----	h	PARALLEL LOAD
1	↑	0	X	0	QAo---	QGo	RIGHT SHIFT
1	↑	1	X	1	QAo---	QGo	
1	↓	X	X	QAo	QBo---	QHo	
1	0	X	X	QAo	QBo---	QHo	NO COUNT
1	1	X	X	QAo	QBo---	QHo	

0 ; LOW LEVEL 1 ; HIGH LEVEL X ; DON'T CARE
a – h ; LEVEL OF INPUTS A–H
QAo–QHo ; LEVEL OF QA–QH BEFORE THE INDICATED INPUT CONDITIONS WERE ESTABLISHED

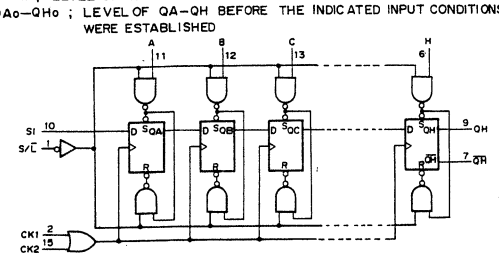

SN74HC21ANS (TI) FLAT PACKAGE
TC74HC21AF (TOSHIBA) FLAT PACKAGE

C-MOS DUAL 4-INPUT POSITIVE AND GATE
– TOP VIEW –

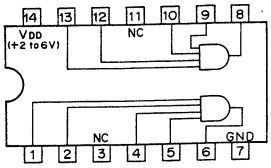

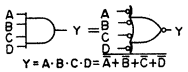

A	B	C	D	Y
0	0	0	0	0
0	0	0	1	0
0	0	1	0	0
0	0	1	1	0
0	1	0	0	0
⋮	⋮	⋮	⋮	⋮
1	1	0	1	0
1	1	1	0	0
1	1	1	1	1

0 ; LOW LEVEL
1 ; HIGH LEVEL

SN74HC240ANS (TI) FLAT PACKAGE

C-MOS 3-STATE INVERTER/LINE DRIVER
– TOP VIEW –

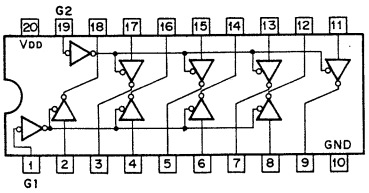

G	A	Y
0	0	1
0	1	0
1	X	HI-Z

0 ; LOW LEVEL
1 ; HIGH LEVEL
X ; DON'T CARE
HI-Z ; HIGH IMPEDANCE

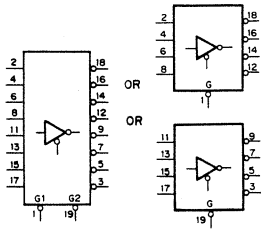

NOTE :

TYPE	VDD
74AC/74HC	+2 to +6V
74ACT/74HCT TC74BC240F TC74BC240P	+5V
TC74AC240F TC74AC240P TC74VHC240	+2 to +5.5V

SN74HC245AN (TI)
SN74HC245ANS (TI) FLAT PACKAGE

C-MOS BILATERAL BUS TRANSCEIVERS WITH 3-STATE OUTPUTS
– TOP VIEW –

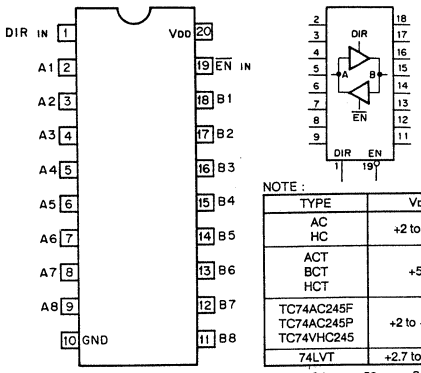

EN	DIR	OPERATION
0	0	B to A
0	1	A to B
1	X	HI-Z

0 ; LOW LEVEL
1 ; HIGH LEVEL
X ; DON'T CARE
HI-Z ; HIGH IMPEDANCE

NOTE :

TYPE	VDD
AC HC	+2 to +6V
ACT BCT HCT	+5V
TC74AC245F TC74AC245P TC74VHC245	+2 to +5.5V
74LVT	+2.7 to +3.6V

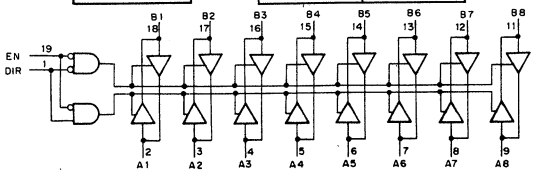

SN74HC251ANS (TI) FLAT PACKAGE

C-MOS 8-LINE-TO-1-LINE DATA SELECTOR/MULTIPLEXER WITH 3-STATE OUTPUT
– TOP VIEW –

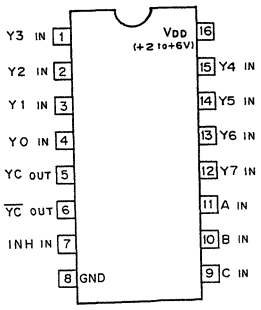

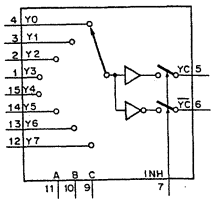

CONTROL IN				OUTPUT	
C	B	A	INH	YC	$\overline{YC}$
X	X	X	1	HI-Z	HI-Z
0	0	0	0	Y0	$\overline{Y0}$
0	0	1	0	Y1	$\overline{Y1}$
0	1	0	0	Y2	$\overline{Y2}$
0	1	1	0	Y3	$\overline{Y3}$
1	0	0	0	Y4	$\overline{Y4}$
1	0	1	0	Y5	$\overline{Y5}$
1	1	0	0	Y6	$\overline{Y6}$
1	1	1	0	Y7	$\overline{Y7}$

0 ; LOW LEVEL
1 ; HIGH LEVEL
HI-Z ; HIGH IMPEDANCE

SN74HC27AN (TI)

C-MOS 3-LINE POSITIVE-NOR GATE
– TOP VIEW –

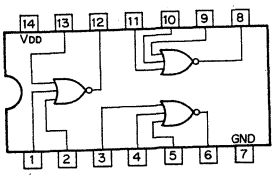

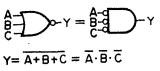

A	B	C	Y
0	0	0	1
0	0	1	0
0	1	0	0
0	1	1	0
1	0	0	0
1	0	1	0
1	1	0	0
1	1	1	0

0 ; LOW LEVEL
1 ; HIGH LEVEL

NOTE :

TYPE	VDD
TC40H	+ 2 to + 8V
OTHERS	+ 2 to + 6V

SN74HC32ANS (TI) FLAT PACKAGE

C-MOS QUAD 2-INPUT OR GATES
– TOP VIEW –

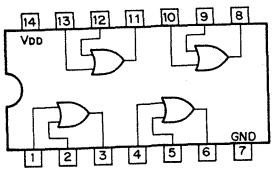

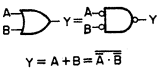

A	B	Y
0	0	0
0	1	1
1	0	1
1	1	1

0;LOW LEVEL
1;HIGH LEVEL

NOTE :

TYPE	VDD
TC74AC32 TYPE TC74VHC32	+2 to +5.5V
OTHER TYPES	+2 to +6V

SN74HC365ANS (TI) FLAT PACKAGE

C-MOS 3-STATE BUS DRIVER
– TOP VIEW –

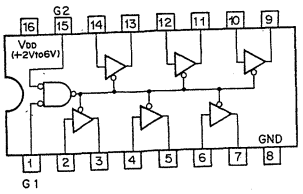

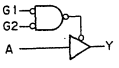

G1	G2	A	Y
0	0	0	0
0	0	1	1
0	1	X	HI-Z
1	0	X	HI-Z
1	1	X	HI-Z

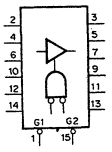

0;LOW LEVEL
1;HIGH LEVEL
X;DON'T CARE
HI-Z;HIGH IMPEDANCE

SN74HC377ANS (TI)
TC74HC377AF (TOSHIBA) FLAT PACKAGE

C-MOS OCTAL D-TYPE FLIP-FLOPS WITH ENABLE
– TOP VIEW –

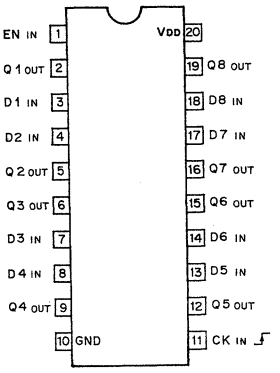

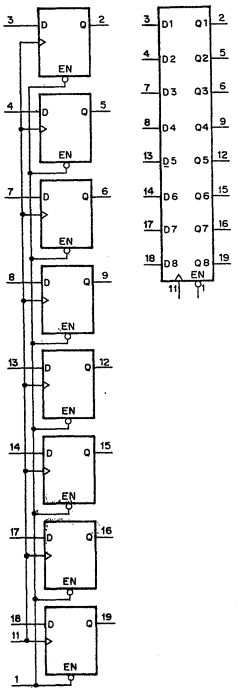

EACH FLIP-FLOP

INPUTS			OUT
EN	CK	D	Q
1	X	X	Qo
0	↑	1	1
0	↑	0	0
X	0	X	Qo

0; LOW LEVEL
1; HIGH LEVEL
X; DON'T CARE

TYPE	VDD
74ACT TYPES 74FCT TYPES	+ 5V
OTHER TYPES	+ 2V to + 6V

SN74HC393ANS (TI) FLAT PACKAGE

C-MOS DUAL 4-BIT BINARY COUNTER
– TOP VIEW –

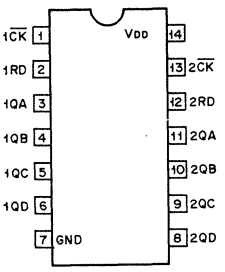

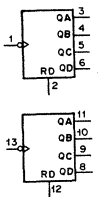

COUNT SEQUENCE

COUNT	QD	QC	QB	QA
0	0	0	0	0
1	0	0	0	1
2	0	0	1	0
3	0	0	1	1
4	0	1	0	0
5	0	1	0	1
6	0	1	1	0
7	0	1	1	1
8	1	0	0	0
9	1	0	0	1
10	1	0	1	0
11	1	0	1	1
12	1	1	0	0
13	1	1	0	1
14	1	1	1	0
15	1	1	1	1

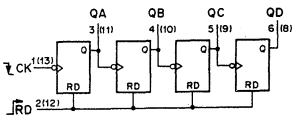

RESET/COUNT FUNCTION

RD	QD	QC	QB	QA
1	0	0	0	0
0	COUNT			

0;LOW LEVEL
1;HIGH LEVEL

NOTE :

TYPE	VDD
74AC	+2 to 5.5V
74HC	+2 to 6V

SN74HC4040ANS (TI) FLAT PACKAGE

C-MOS 12-STAGE RIPPLE CARRY BINARY COUNTER/DRIVER
– TOP VIEW –

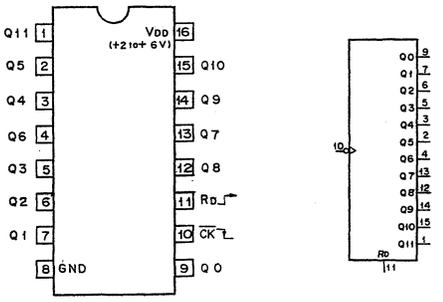

COUNT	Q11	Q10	Q9	Q8	Q7	Q6	Q5	Q4	Q3	Q2	Q1	Q0
0	0	0	0	0	0	0	0	0	0	0	0	0
1	0	0	0	0	0	0	0	0	0	0	0	1
2	0	0	0	0	0	0	0	0	0	0	1	0
3	0	0	0	0	0	0	0	0	0	0	1	1
⋮	⋮	⋮	⋮	⋮	⋮	⋮	⋮	⋮	⋮	⋮	⋮	⋮
4095	1	1	1	1	1	1	1	1	1	1	1	1

RD	Q11 ····· Q0
1	ALL LOW
0	COUNT

0; LOW LEVEL
1; HIGH LEVEL

SN74LS145NS (TI) FLAT PACKAGE

TTL BCD-TO-DECIMAL DECODER/DRIVER
– TOP VIEW –

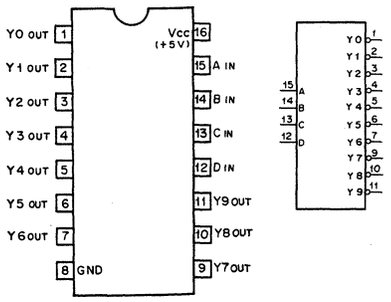

STATE	INPUTS				OUTPUTS									
	D	C	B	A	Y0	Y1	Y2	Y3	Y4	Y5	Y6	Y7	Y8	Y9
0	0	0	0	0	0	1	1	1	1	1	1	1	1	1
1	0	0	0	1	1	0	1	1	1	1	1	1	1	1
2	0	0	1	0	1	1	0	1	1	1	1	1	1	1
3	0	0	1	1	1	1	1	0	1	1	1	1	1	1
4	0	1	0	0	1	1	1	1	0	1	1	1	1	1
5	0	1	0	1	1	1	1	1	1	0	1	1	1	1
6	0	1	1	0	1	1	1	1	1	1	0	1	1	1
7	0	1	1	1	1	1	1	1	1	1	1	0	1	1
8	1	0	0	0	1	1	1	1	1	1	1	1	0	1
9	1	0	0	1	1	1	1	1	1	1	1	1	1	0
INVALID	1	0	1	0	1	1	1	1	1	1	1	1	1	1
	1	0	1	1	1	1	1	1	1	1	1	1	1	1
	1	1	0	0	1	1	1	1	1	1	1	1	1	1
	1	1	0	1	1	1	1	1	1	1	1	1	1	1
	1	1	1	0	1	1	1	1	1	1	1	1	1	1
	1	1	1	1	1	1	1	1	1	1	1	1	1	1

0; LOW LEVEL
1; HIGH LEVEL

SN74LS14NS (TI) FLAT PACKAGE

TTL SCHMITT TRIGGER INVERTER
– TOP VIEW –

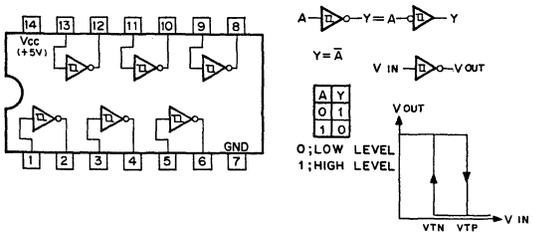

TYPE	VTN	VTP
7414 74F14	0.9V	1.7V
74LS14	0.8V	1.6V

SN74LS156NS (TI) FLAT PACKAGE

TTL DUAL 2-TO-4-LINE DECODER/DEMULTIPLEXER WITH OPEN-COLLECTOR
– TOP VIEW –

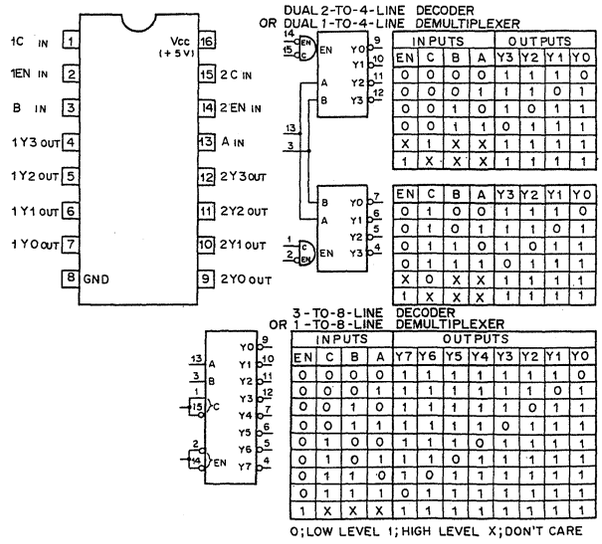

INPUTS				OUTPUTS			
EN	C	B	A	Y3	Y2	Y1	Y0
0	0	0	0	1	1	1	0
0	0	0	1	1	1	0	1
0	0	1	0	1	0	1	1
0	0	1	1	0	1	1	1
X	1	X	X	1	1	1	1
1	X	X	X	1	1	1	1

EN	C	B	A	Y3	Y2	Y1	Y0
0	1	0	0	1	1	1	0
0	1	0	1	1	1	0	1
0	1	1	0	1	0	1	1
0	1	1	1	0	1	1	1
X	0	X	X	1	1	1	1
1	X	X	X	1	1	1	1

INPUTS				OUTPUTS							
EN	C	B	A	Y7	Y6	Y5	Y4	Y3	Y2	Y1	Y0
0	0	0	0	1	1	1	1	1	1	1	0
0	0	0	1	1	1	1	1	1	1	0	1
0	0	1	0	1	1	1	1	1	0	1	1
0	0	1	1	1	1	1	1	0	1	1	1
0	1	0	0	1	1	1	0	1	1	1	1
0	1	0	1	1	1	0	1	1	1	1	1
0	1	1	0	1	0	1	1	1	1	1	1
0	1	1	1	0	1	1	1	1	1	1	1
1	X	X	X	1	1	1	1	1	1	1	1

0; LOW LEVEL 1; HIGH LEVEL X; DON'T CARE

SN74LS624NS (TI) FLAT PACKAGE

TTL VOLTAGE CONTROLLED OSCILLATOR
– TOP VIEW –

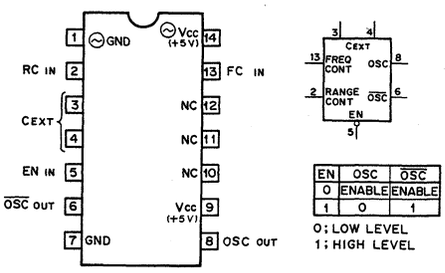

EN	OSC	$\overline{OSC}$
0	ENABLE	ENABLE
1	0	1

0; LOW LEVEL
1; HIGH LEVEL

SN75123N (TI)
SN75123NS (TI)

DUAL LINE DRIVER AND TRIPLE LINE RECEIVER
– TOP VIEW –

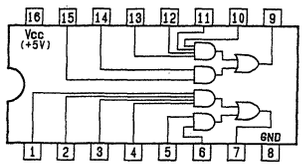

SN75124N (TI)
SN75124NS (TI)

TRIPLE LINE RECEIVER
– TOP VIEW –

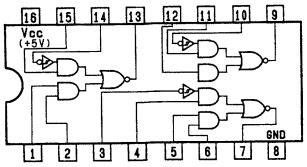

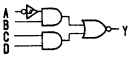

A	B	C	D	Y
X	X	1	1	0
0	1	X	X	0
1	X	0	X	1
X	0	0	X	1
1	X	X	0	1
X	0	X	0	1

0 ; LOW LEVEL
1 ; HIGH LEVEL
X; DON'T CARE

SN75158PS (TI)
DUAL DIFFERENTIAL LINE DRIVE
– TOP VIEW –

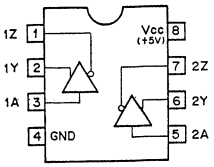

SSM-2017P (PMI)

SELF-CONTAINED AUDIO PREAMPLIFIER
– TOP VIEW –

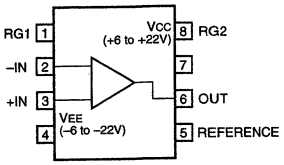

SSM-2142P (PMI)
BALANCED LINE DRIVER
– TOP VIEW –

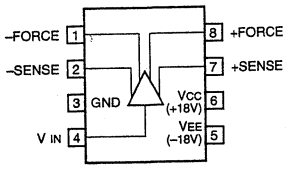

TA7805S (TOSHIBA) + 5V
TA7812S (TOSHIBA) + 12V
TA7815S (TOSHIBA) + 15V

POSITIVE VOLTAGE REGULATOR (0.5A)
– SIDE VIEW –

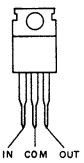

TC4011UBP (TOSHIBA)
C-MOS 2-INPUT NAND GATE
– TOP VIEW –

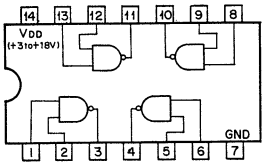

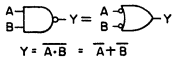

A	B	Y
0	0	1
0	1	1
1	0	1
1	1	0

0:LOW LEVEL
1:HIGH LEVEL

TC514256BZ-60 (TOSHIBA) (ACCESS TIME = 60nS)
C-MOS 1M (262,144WORDx4)-BIT MULTIPORT DYNAMIC RAM
– TOP VIEW –

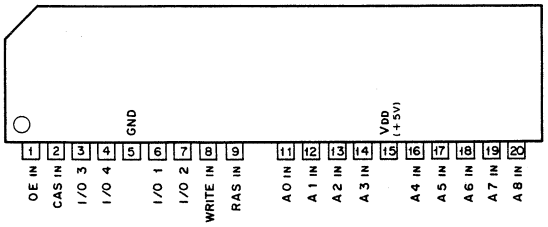

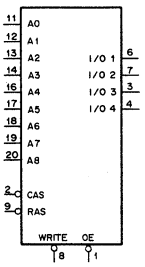

A0 – A8 : ADDRESS INPUTS
CAS : COLUMN ADDRESS STROBE INPUT
I/O1 – I/O4 : DATA INPUTS/OUTPUTS
OE : OUTPUT ENABLE INPUT
RAS : ROW ADDRESS STROBE INPUT
WRITE : READ/WRITE INPUT

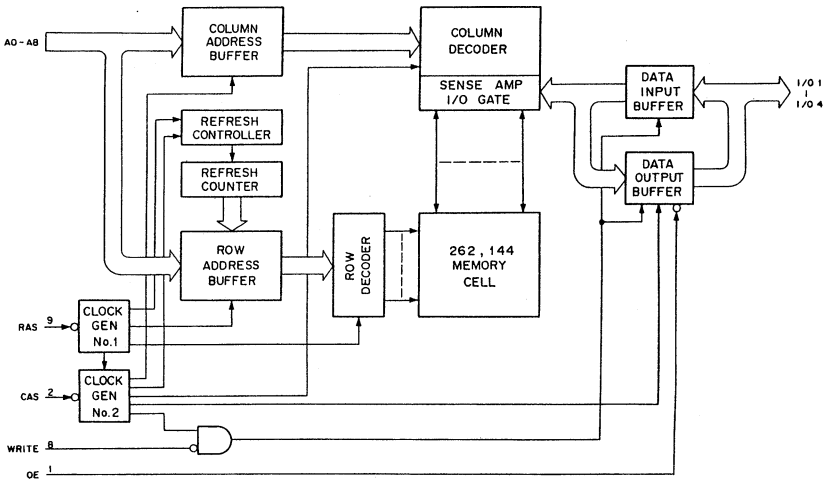

TC74AC175F (TOSHIBA) FLAT PACKAGE
TC74AC175P (TOSHIBA)

C-MOS QUAD D-TYPE FLIP-FLOPS WITH RESET
– TOP VIEW –

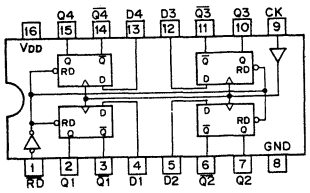

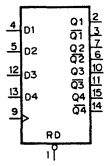

RD	CK	D	Q	Q̄
0	X	X	0	1
1	↑	1	1	0
1	↑	0	0	1
1	0	X	Q_0	$\bar{Q}_0$

0 ; LOW LEVEL
1 ; HIGH LEVEL
X ; DON'T CARE
Q_0 ; NO CHANGE
$\bar{Q}_0$; NO CHANGE

NOTE :

TYPE	VDD
AC TYPE	+2 to +5.5 V
74ACT175 TYPE	+4.5V to 5.5 V
OTHER TYPES	+2 to +6 V

TC74HC07AF (TOSHIBA) FLAT PACKAGE
TC74HC07AP (TOSHIBA)

C-MOS BUFFER/DRIVER WITH OPEN-COLLECTOR
– TOP VIEW –

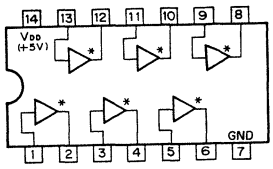

A	Y
0	0
1	1

0 ; LOW LEVEL
1 ; HIGH LEVEL
* ; OPEN COLLECTOR

TC74HC123AF (TOSHIBA) FLAT PACKAGE
TC74HC123AP (TOSHIBA)

C-MOS DUAL RETRIGGERABLE MONOSTABLE MULTIVIBRATORS
– TOP VIEW –

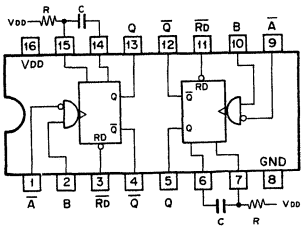

INPUT			OUTPUT	
RD	A	B	Q	Q̄
0	X	X	0	1
1	1	X	0	1
1	X	0	0	1
1	0	↓	↓	↑
1	↑	1	↓	↑
↓	0	1	↓	↑

0 ; LOW LEVEL
1 ; HIGH LEVEL
X ; DON'T CARE

OUTPUT PULSE WIDTH = 0.46CR

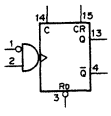

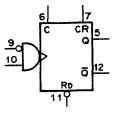

NOTE :

TYPE	VDD
TC74HCT123AF	+5V
OTHER TYPES	+2 to +6V

TC74HC238AF (TOSHIBA) FLAT PACKAGE

C-MOS 3-TO-8 LINE DECODER/DEMULTIPLEXER
– TOP VIEW –

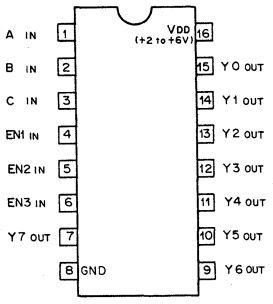

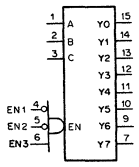

INPUT				OUTPUT							
EN	C	B	A	Y7	Y6	Y5	Y4	Y3	Y2	Y1	Y0
0	X	X	X	0	0	0	0	0	0	0	0
1	0	0	0	0	0	0	0	0	0	0	1
1	0	0	1	0	0	0	0	0	0	1	0
1	0	1	0	0	0	0	0	0	1	0	0
1	0	1	1	0	0	0	0	1	0	0	0
1	1	0	0	0	0	0	1	0	0	0	0
1	1	0	1	0	0	1	0	0	0	0	0
1	1	1	0	0	1	0	0	0	0	0	0
1	1	1	1	1	0	0	0	0	0	0	0

$EN = \overline{EN1} \cdot \overline{EN2} \cdot EN3$

0 ; LOW LEVEL
1 ; HIGH LEVEL
X ; DON'T CARE

TC74HC4028AF (TOSHIBA)

C-MOS BCD TO DECIMAL DECODER
– TOP VIEW –

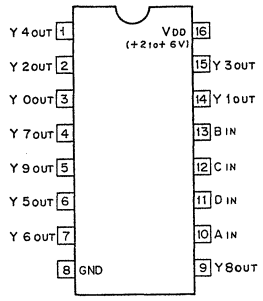

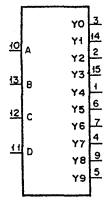

STATE	INPUTS				OUTPUTS									
	D	C	B	A	Y0	Y1	Y2	Y3	Y4	Y5	Y6	Y7	Y8	Y9
0	0	0	0	0	1	0	0	0	0	0	0	0	0	0
1	0	0	0	1	0	1	0	0	0	0	0	0	0	0
2	0	0	1	0	0	0	1	0	0	0	0	0	0	0
3	0	0	1	1	0	0	0	1	0	0	0	0	0	0
4	0	1	0	0	0	0	0	0	1	0	0	0	0	0
5	0	1	0	1	0	0	0	0	0	1	0	0	0	0
6	0	1	1	0	0	0	0	0	0	0	1	0	0	0
7	0	1	1	1	0	0	0	0	0	0	0	1	0	0
8	1	X	X	0	0	0	0	0	0	0	0	0	1	0
9	1	X	X	1	0	0	0	0	0	0	0	0	0	1

0;LOW LEVEL
1;HIGH LEVEL
X;DON'T CARE

TC74HC4072AP (TOSHIBA)

C-MOS 4-INPUT OR GATE
– TOP VIEW –

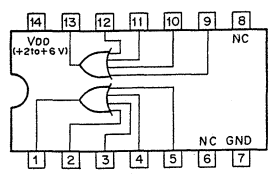

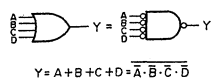

D	C	B	A	Y
0	0	0	0	0
X	X	X	1	1
X	X	1	X	1
X	1	X	X	1
1	X	X	X	1

0;LOW LEVEL
1;HIGH LEVEL
X;DON'T CARE

TC74HC688AF (TOSHIBA) FLAT PACKAGE

C-MOS 8-BIT EQUALITY DETECTOR
– TOP VIEW –

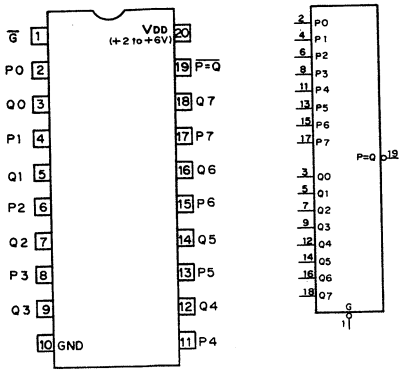

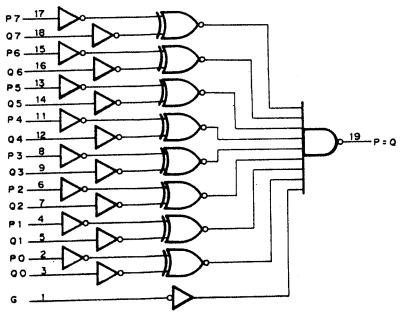

INPUTS		OUTPUT
P, Q	G	P = Q
P=Q	0	0
P>Q	0	1
P<Q	0	1
X	1	1

0; LOW LEVEL
1; HIGH LEVEL
X; DON'T CARE

TC9130P (TOSHIBA)

C-MOS 4 CHANNEL CYCLIC TYPE TOUCH SWITCH
– TOP VIEW –

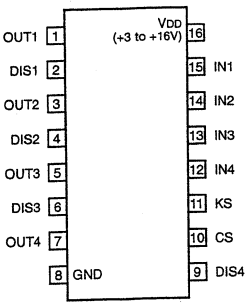

IN1–IN4; INPUTS
CS; INPUT SIGNAL INHIBITION INPUT
DIS1–DIS4; OUTPUT SIGNAL INPUT
OUT1–OUT4; OUTPUTS
KS; INPUT SIGNAL DETECTION OUTPUT

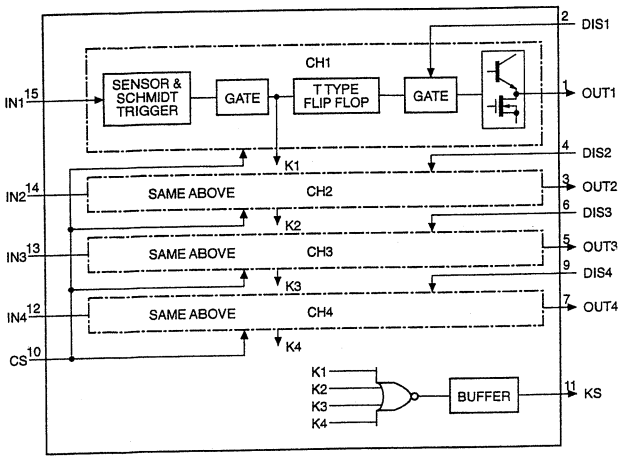

TD62381F (TOSHIBA) FLAT PACKAGE
TD62381P (TOSHIBA)

OCTAL LOW SATURATION DRIVER
– TOP VIEW –

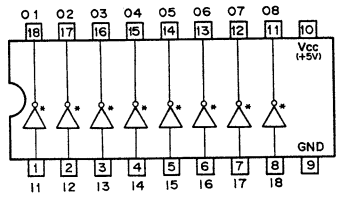

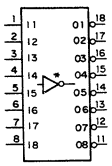

*; OPEN COLLECTOR

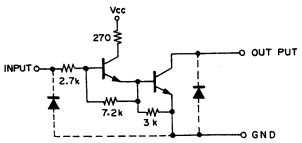

TD62783AF (TOSHIBA) FLAT PACKAGE
TD62783F (TOSHIBA) FLAT PACKAGE

OCTAL DRIVER
– TOP VIEW –

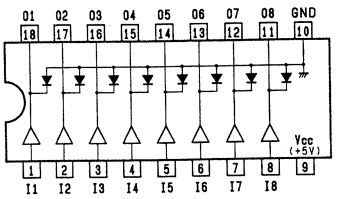

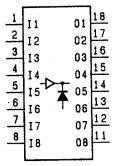

O1–O8 ; OUTPUTS
I1–I8 ; INPUTS

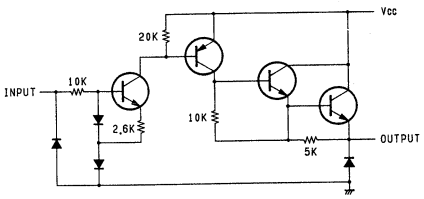

TL062CP (TI)
TL072CPS (TI)
TL082ACP (TI)
TL082CP (TI)

OPERATIONAL AMPLIFIER
(J FET-INPUT)
– TOP VIEW –

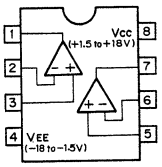

TL084CN (TI)

OPERATIONAL AMPLIFIER
(J FET-INPUT)
– TOP VIEW –

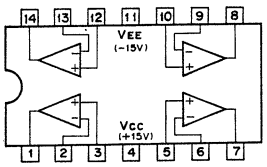

TMP82C79M-2 (TOSHIBA) FLAT PACKAGE

C-MOS PROGRAMABLE KEY-BOARD/DISPLAY INTERFACE DEVICE
– TOP VIEW –

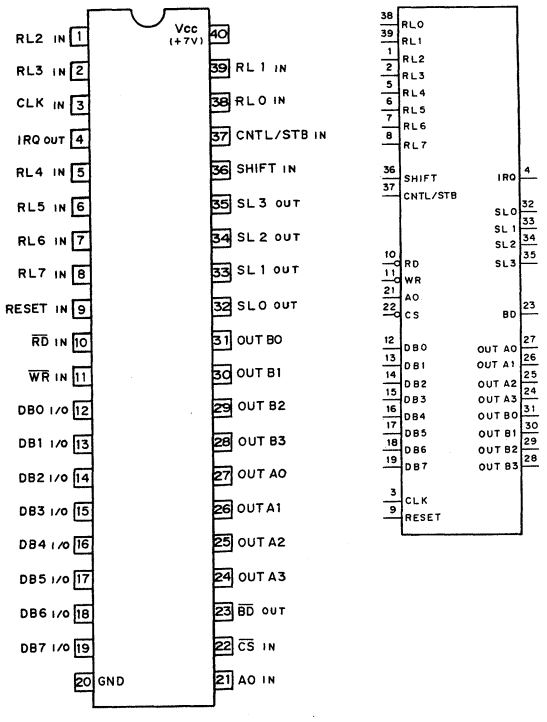

A0 ; COMMAND/DATA CONTROL INPUT
BD ; DISPLAY BLANKING OUTPUT
CLK ; CLOCK INPUT
CNTL/STB ; CONTROL/STROBE INPUT
CS ; CHIP SELECT INPUT
DB0-DB7 ; DATA BUS INPUT/OUTPUT
IRQ ; INTERRUPT REQUEST OUTPUT
OUT A0-A3
OUT B0-B3 ; 16x4 BIT EXPRESSION REFRESH REGISTER
RD ; READ STROBE INPUT
RESET ; RESET INPUT
RL0-RL7 ; RETURN LINE INPUT
SHIFT ; SHIFT INPUT
SL0-SL3 ; SCANNING LINE OUTPUT
WR ; WRITE STROBE INPUT

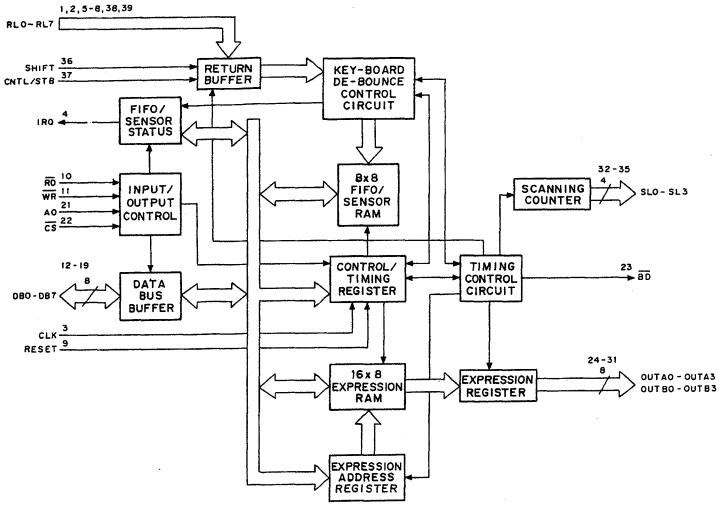

TMS27C210A-12JL (TI)

C-MOS 1M (64k × 16)-BIT ERASABLE PROM
– TOP VIEW –

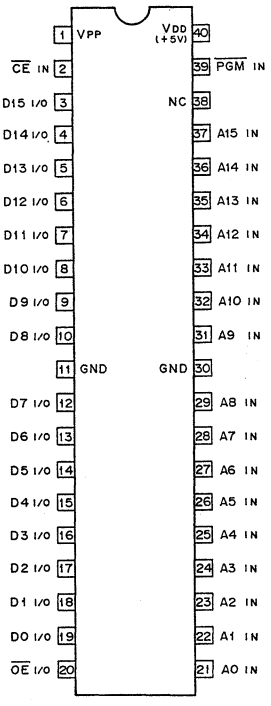

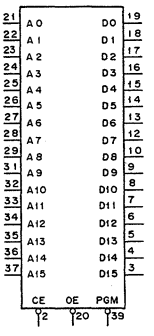

A0 – A15 ; ADDRESS INPUT
CE ; CHIP ENABLE INPUT
D0 – D15 ; DATA INPUT/OUTPUT
OE ; OUTPUT ENABLE INPUT
PGM ; PROGRAM ENABLE INPUT
VPP ; PROGRAM VOLTAGE INPUT
(NORMAL : +5V / PROGRAM : +13V)

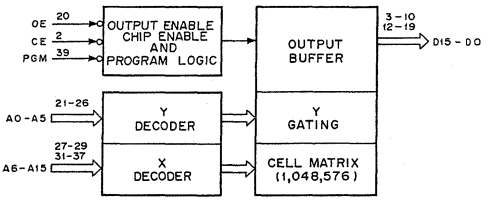

A0	A9	CE	OE	PGM	VPP	FUNCTION	
×	×	0	0	1	+5V	READ	
×	×	0	1	1	+5V	OUTPUT DISABLE	
×	×	1	×	×	+5V	STANDBY (TTL)	
×	×	+5V	×	×	+5V	STANDBY (C-MOS)	
×	×	0	×	0	+12.5V	PROGRAM	
×	×	0	0	1	+12.5V	PROGRAM VERIFY	
×	×	1	×	×	+12.5V	PROGRAM INHIBIT	
0	1	0	0	1	+5V	MANUFACTURER CODE	AUTO SELECT (NOTE)
1	1	0	0	1	+5V	DEVICE CODE	

0 : LOW LEVEL
1 : HIGH LEVEL
×: DON'T CARE
HI-Z: HIGH IMPEDANCE

NOTE : A1 – A8, A10 – A15 = LOW LEVEL

TL7705ACP (TI)
TL7705ACPS (TI) FLAT PACKAGE

POWER VOLTAGE SUPERVISOR
– TOP VIEW –

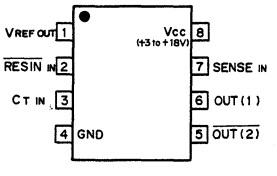

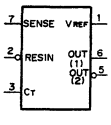

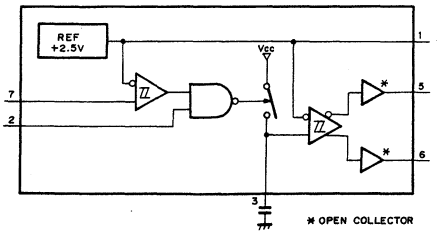

TMPZ84C011BF-6 (TOSHIBA)

C-MOS 8 BIT MICROPROCESSOR

– TOP VIEW –

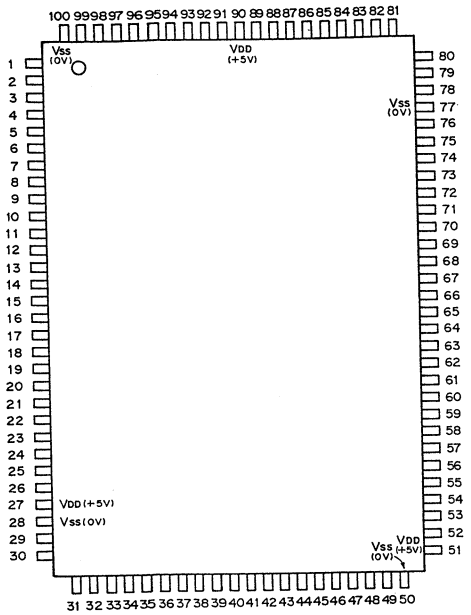

NO.	IN	OUT	SYMBOL	NO.	IN	OUT	SYMBOL
1	○		IEI	51			Vcc
2	○		CLK/TRG3	52		○	CLK
3	○		CLK/TRG2	53	○	○	PC7
4	○		CLK/TRG1	54	○	○	PC6
5	○		CLK/TRG0	55	○	○	PC5
6	○	○	D7	56	○	○	PC4
7	○	○	D6	57	○	○	PC3
8	○	○	D5	58	○	○	PC2
9	○	○	D4	59	○	○	PC1
10	○	○	D3	60	○	○	PC0
11	○	○	D2	61	○	○	PA7
12	○	○	D1	62	○	○	PA6
13	○	○	D0	63	○	○	PA5
14	○		$\overline{INT}$	64	○	○	PA4
15	○		EV	65	○	○	PA3
16		○	$\overline{HALT}$	66	○	○	PA2
17		○	$\overline{MREQ}$	67	○	○	PA1
18		○	$\overline{IORQ}$	68	○	○	PA0
19		○	$\overline{RD}$	69	○	○	PB7
20		○	$\overline{WR}$	70	○	○	PB6
21		○	$\overline{BUSACK}$	71	○	○	PB5
22	○		$\overline{WAIT}$	72	○	○	PB4
23	○		$\overline{BUSREQ}$	73	○	○	PB3
24	○		$\overline{RESET}$	74	○	○	PB2
25		○	$\overline{M1}$	75	○	○	PB1
26		○	$\overline{RFSH}$	76	○	○	PB0
27			Vcc	77			Vss
28			Vss	78	○	○	PE7
29		○	A0	79	○	○	PE6
30		○	A1	80	○	○	PE5
31		○	A2	81	○	○	PE4
32		○	A3	82	○	○	PE3
33		○	A4	83	○	○	PE2
34		○	A5	84	○	○	PE1
35		○	A6	85	○	○	PE0
36		○	A7	86	○		TEST
37		○	A8	87		○	IEO
38		○	A9	88	○	○	PD7
39		○	A10	89	○	○	PD6
40		○	A11	90			Vcc
41		○	A12	91	○	○	PD5
42		○	A13	92	○	○	PD4
43		○	A14	93	○	○	PD3
44		○	A15	94	○	○	PD2
45	○		$\overline{NMI}$	95	○	○	PD1
46	○		MS2	96	○	○	PD0
47	○		MS1	97		○	ZC/TO2
48		○	XTAL2	98		○	ZC/TO1
49	○		XTAL1	99		○	ZC/TO0
50			Vss	100			Vss

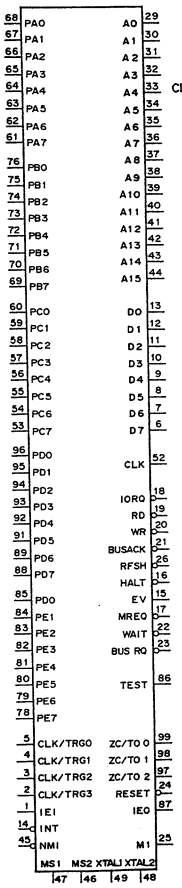

A0–A15 ; 3-STATE ADDRESS BUS OUTPUTS
BUSACK ; BUS ACKNOWLEDGE OUTPUT
BUS REQ ; BUS REQUEST INPUT
CLK ; CLOCK OUTPUT
CLK/TRG0–3 ; EXTERNAL CLOCK / TIMER TRIGGER0–3 INPUTS
D0–D7 ; 3-STATE DATA BUS INPUTS/OUTPUTS
EV ; EVALUATER INPUT
HALT ; HALT OUTPUT
IEI/IEO ; CTC INTERRUPT ENABLE INPUT/OUTPUT
INT ; MASKABLE INTERRUPT REQUEST INPUT
IORQ ; 3-STATE I/O REQUEST OUTPUT
M1 ; 3-STATE MACHINE CYCLE 1 OUTPUT
MREQ ; 3-STATE REQUEST OUTPUT
MS1/MS2 ; MODE SELECT 1/2 INPUTS
NMI ; NON-MASKABLE INTERRUPT REQUEST INPUT
PA0–PA7 ; PB0–PB7 ; PC0–PC7 ; PD0–PD7 ; PE0–PE7 ; } 3-STATE I/O PORT
RD ; 3-STATE READ OUTPUT
RESET ; RESET INPUT
RFSH ; REFRESH OUTPUT
TEST ; TEST INPUT
WAIT ; WAIT REQUEST INPUT
WR ; 3-STATE WRITE OUTPUT
ZC/TO0–2 ; ZERO COUNT/TIME OUT 0–2 OUTPUTS

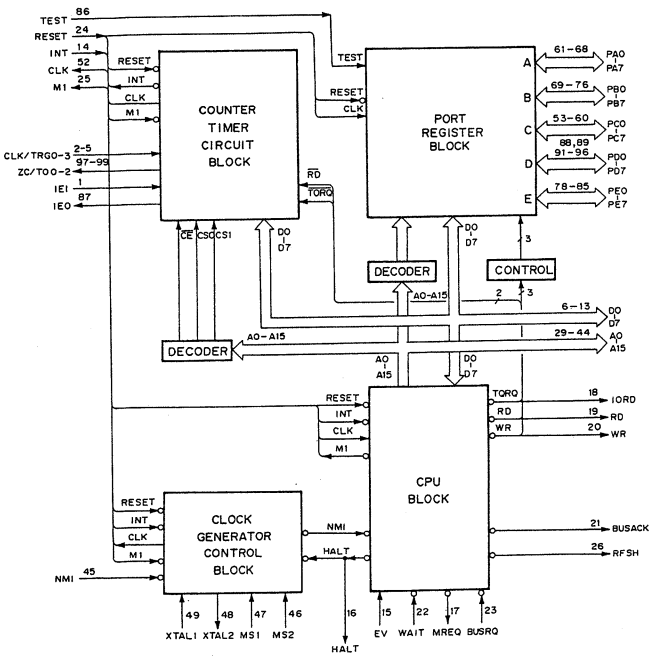

TMPZ84C015BF-6 (TOSHIBA) FLAT PACKAGE

C-MOS 8-BIT MICROPROCCESSOR

– TOP VIEW –

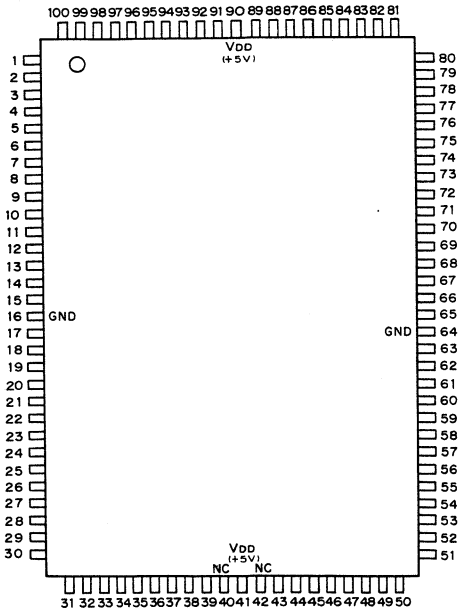

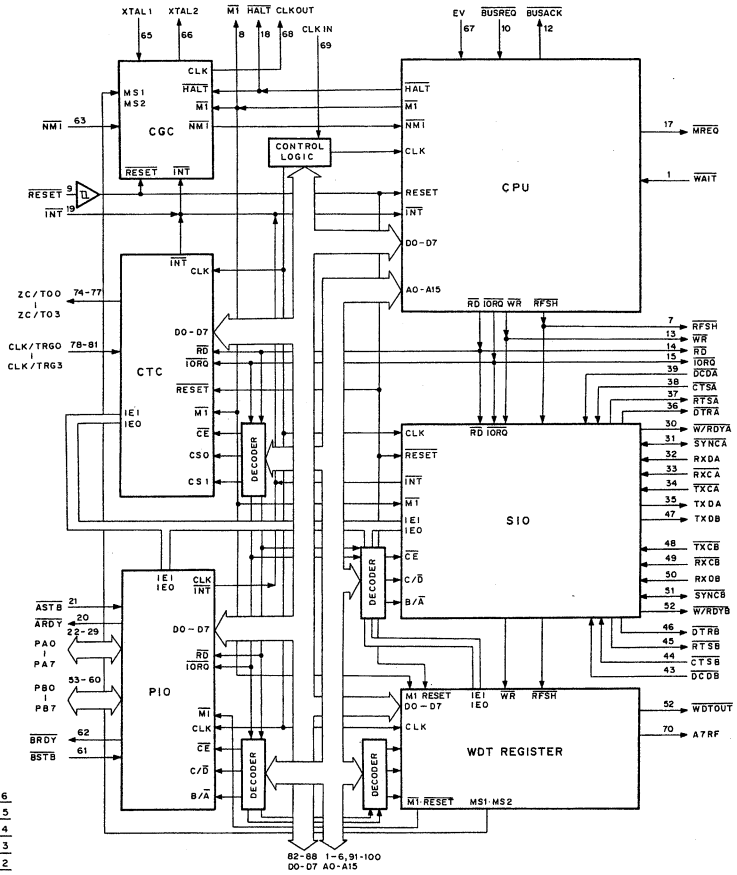

NO.	IN	OUT	SYMBOL	NO.	IN	OUT	SYMBOL
1		O	A5	51	O	O	SYNCB
2		O	A4	52		O	W/RDYB
3		O	A3	53	O	O	PB0
4		O	A2	54	O	O	PB1
5		O	A1	55	O	O	PB2
6		O	A0	56	O	O	PB3
7		O	RFSH	57	O	O	PB4
8		O	M1	58	O	O	PB5
9	O		REST	59	O	O	PB6
10	O		BUSREQ	60	O	O	PB7
11	O		WAIT	61	O		BSTB
12		O	BUSACK	62		O	BRDY
13		O	WR	63	O		NMI
14		O	RD	64			GND
15		O	IORQ	65	O		XTAL1
16			GND	66		O	XTAL2
17		O	MREQ	67	O		EV
18		O	HALT	68		O	CLKOUT
19	O		INT	69	O		CLKIN
20		O	ARDY	70		O	A7RF
21	O		ASTB	71		O	IEO
22	O	O	PA7	72	O		IEI
23	O	O	PA6	73		O	WDTOUT
24	O	O	PA5	74		O	ZC/TO0
25	O	O	PA4	75		O	ZC/TO1
26	O	O	PA3	76		O	ZC/TO2
27	O	O	PA2	77		O	ZC/TO3
28	O	O	PA1	78	O		CLK/TRG3
29	O	O	PA0	79	O		CLK/TRG2
30		O	W/RDYA	80	O		CLK/TRG1
31	O	O	SYNCA	81	O		CLK/TRG0
32	O		RXDA	82	O	O	D7
33	O		RXCA	83	O	O	D6
34	O		TXCA	84	O	O	D5
35		O	TXDA	85	O	O	D4
36		O	DTRA	86	O	O	D3
37		O	RTSA	87	O	O	D2
38	O		CTSA	88	O	O	D1
39	O		DCDA	89	O	O	D0
40			NC	90			VDD
41			VDD	91		O	A15
42			NC	92		O	A14
43	O		DCDB	93		O	A13
44	O		CTSB	94		O	A12
45		O	RTSB	95		O	A11
46		O	DTRB	96		O	A10
47		O	TXDB	97		O	A9
48	O		TXCB	98		O	A8
49	O		RXCB	99		O	A7
50	O		RXDB	100		O	A6

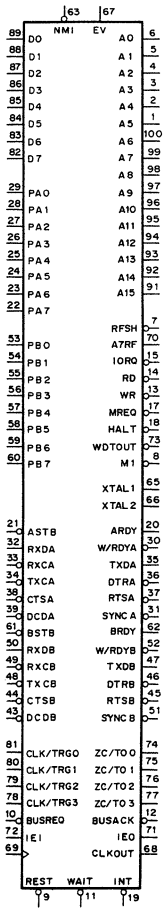

A0 – A15	; 3-STATE ADDRESS BUS OUTPUTS
$\overline{\text{BUSACK}}$	; BUS ACKNOWLEDGE OUTPUT
$\overline{\text{BUSREQ}}$	; BUS REQUEST INPUT
CLK/TRIG0 – 3	; EXTERNAL CLOCK/TIMER TRIGGER 0 – 3 INPUTS
D0 – D7	; 3-STATE DATA BUS INPUTS/OUTPUTS
EV	; EVALUATER INPUT
$\overline{\text{HALT}}$	; HALT OUTPUT
IEI/IEO	; CTC INTERRUPT ENABLE INPUT/OUTPUT
$\overline{\text{INT}}$	; MASKABLE INTERRUPT REQUEST/INPUT
$\overline{\text{IORQ}}$	; 3-STATE I/O REQUEST OUTPUT
$\overline{\text{MI}}$	; 3-STATE MACHINE CYCLE 1 OUTPUT
$\overline{\text{MREQ}}$	; 3-STATE MEMORY REQUEST OUTPUT
$\overline{\text{NMI}}$	; NON-MASKABLE INTERRUPT REQUEST INPUT
PA0 – PA7, PB0 – PB7	; 3-STATE I/O PORT
$\overline{\text{RD}}$	; 3-STATE READ OUTPUT
$\overline{\text{REST}}$	; RESET INPUT
$\overline{\text{RFSH}}$	; REFRESH OUTPUT
$\overline{\text{WAIT}}$	; WAIT REQUEST INPUT

$\overline{\text{WR}}$	; 3-STATE WRITE OUTPUT
ZC/TO0 – 3	; ZERO COUNT/TIME OUT 0 – 3 OUTPUTS
$\overline{\text{ASTB}}$	; PORT A STROBE PULSE INPUT
ARDY	; REGISTER A READY OUTPUT
$\overline{\text{BSTB}}$	; PORT B STROBE PULSE INPUT
BRDY	; REGISTER B READY OUTPUT
$\overline{\text{SYNCA}}$, $\overline{\text{SYNCB}}$	; SYNC INPUT/OUTPUT
W/RADYA, W/RADYB	; WAIT/READY OUTPUT
$\overline{\text{RXDA}}$, $\overline{\text{RXDB}}$	; SERIAL DATA INPUT
$\overline{\text{RXCA}}$, $\overline{\text{RXCB}}$	; RECEIVE CLOCK INPUT
$\overline{\text{TXCA}}$, $\overline{\text{TXCB}}$	; TRANSMISSION CLOCK INPUT
$\overline{\text{TXDA}}$, $\overline{\text{TXDB}}$	; SERIAL DATA OUTPUT
$\overline{\text{DTRA}}$, $\overline{\text{DTRB}}$	; DATA TERMINAL READY OUTPUT
$\overline{\text{RTSA}}$, $\overline{\text{RTSB}}$	; TRANSMISSION REQUEST OUTPUT
$\overline{\text{CTSA}}$, $\overline{\text{CTSB}}$	; TRANSMISSION ENABLE INPUT
$\overline{\text{DCDA}}$, $\overline{\text{DCDB}}$	; DATA CARRIER DETECT OUTPUT
$\overline{\text{WDTOUT}}$	; WATCH DOG TIMER OUTPUT

UPC1238H (NEC)

AUDIO POWER AMPLIFIER
– FRONT VIEW –

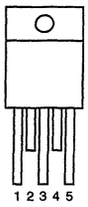

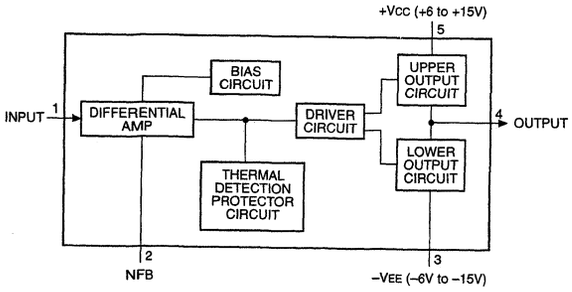

UPC814C (NEC)

TTL-DUAL OPERATIONAL AMPLIFIER
– TOP VIEW –

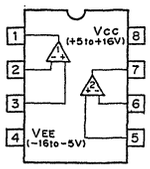

CXK581000AM-70LL (SONY) FLAT PACKAGE
UPD431000AGW-10LL (NEC) FLAT PACKAGE
UPD431000AGW-70L (NEC) FLAT PACKAGE
UPD431000AGW-70LL (NEC) FLAT PACKAGE

C-MOS 1M (128K × 8)-BIT STATIC RAM
– TOP VIEW –

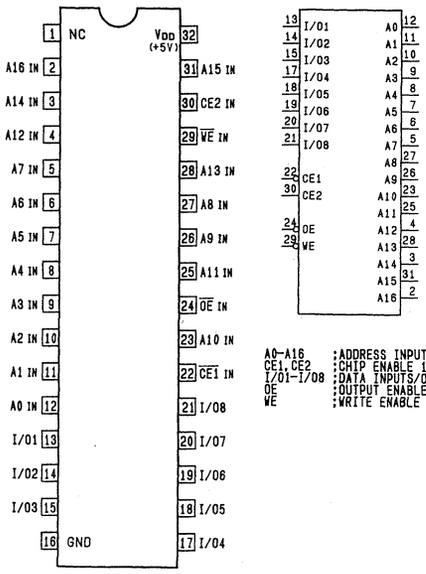

A0–A16 ;ADDRESS INPUTS
CE1,CE2 ;CHIP ENABLE 1,2 INPUTS
I/01–I/08 ;DATA INPUTS/OUTPUTS
OE ;OUTPUT ENABLE INPUT
WE ;WRITE ENABLE INPUT

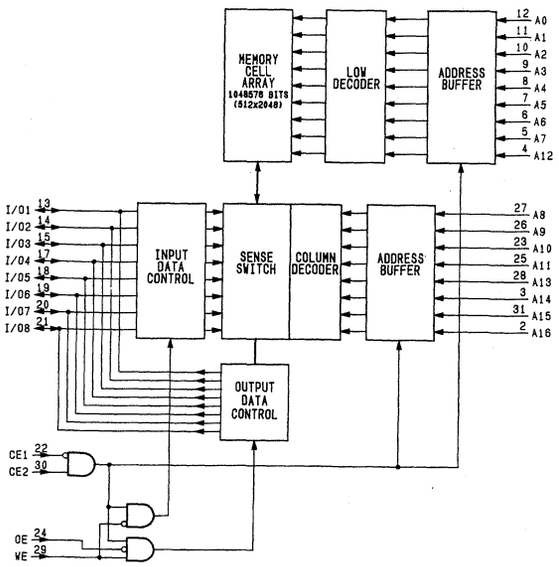

MODE :

CE1	CE2	OE	WE	MODE	DATA OUTPUT
1	X	X	X	NO SELECTION (POWER DOWN)	HI-Z
X	0	X	X		
0	1	1	1	OUTPUT DISABLE	
0	1	0	1	READ	D OUT
0	1	X	0	WRITE	D IN

0 : LOW LEVEL
1 : HIGH LEVEL
X : DON'T CARE
HI-Z: HIGH IMPEDANCE

UPD43256AGU-10L (NEC) FLAT PACKAGE
UPD43256AGU-10LL (NEC)
UPD43256AGU-12L (NEC) FLAT PACKAGE

C-MOS 262144-BIT (32768 × 8) STATIC RAM
– TOP VIEW –

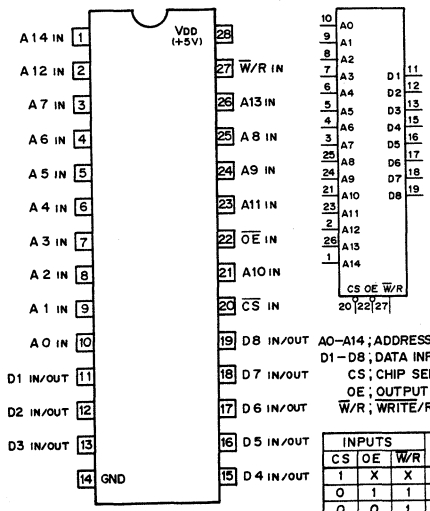

A0–A14 ; ADDRESS INPUTS
D1–D8 ; DATA INPUTS/OUTPUTS
CS ; CHIP SELECT INPUT
OE ; OUTPUT ENABLE INPUT
W/R ; WRITE/READ INPUT

INPUTS CS	OE	W/R	MODE	OUTPUT STATUS
1	X	X	NO SELECTION	HI–Z
0	1	1	OUTPUT DISABLE	
0	0	1	READ	D OUT
0	X	0	WRITE	D IN

0 ; LOW LEVEL X ; DON'T CARE
1 ; HIGH LEVEL HI–Z ; HIGH IMPEDANCE

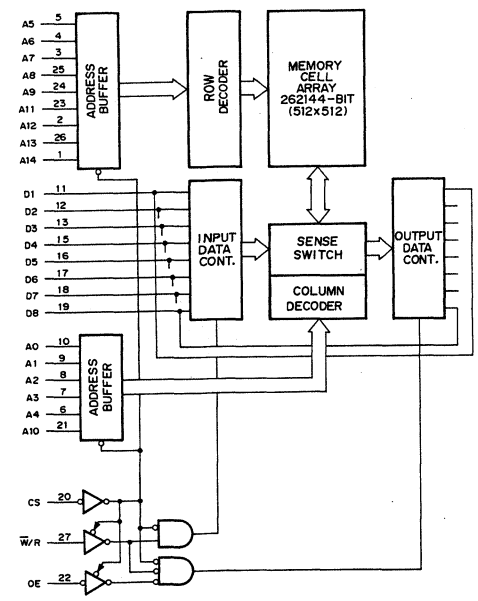

UPD5201C (NEC)

C-MOS QUAD SPST ANALOG SWITCH
– TOP VIEW –

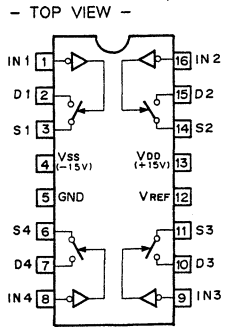

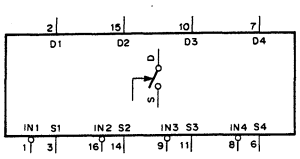

IN	SWITCH
0	ON
1	OFF

0 : LOW LEVEL
1 : HIGH LEVEL

D1–D4 : DRAIN
S1–S4 : SOURCE
SPST : SINGLE-POLE, SINGLE-THROW

UPD7004C (NEC)

C-MOS 10-BIT SUCCESSIVE COMPARATOR TYPE A/D CONVERTER
– TOP VIEW –

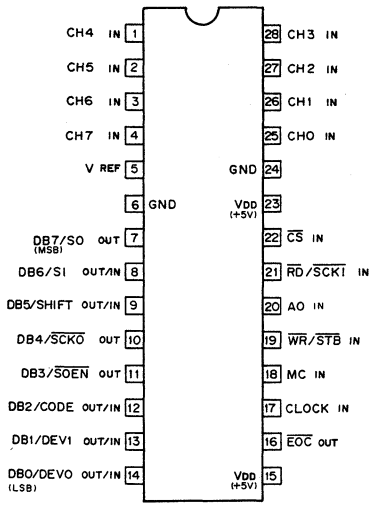

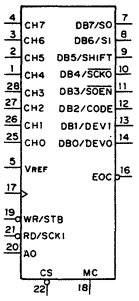

AO ; CONTROL ADDRESS INPUT
CH0~7 ; ANALOG INPUT
CODE ; CODE SELECT (2'S COMPLEMENT/ BINARY) INPUT
CS ; CHIP SELECT INPUT
DB0~7 ; DATA BUS INPUT/OUTPUT
DEVO, DEV1 ; CLOCK RATE SELECT INPUT
EOC ; CONVERSION ENDING SIGNAL OUTPUT
MC ; MODE SELECT INPUT
RD ; READ SIGNAL INPUT
SCKI ; SERIAL CLOCK INPUT
SCKO ; SERIAL CLOCK OUTPUT
SHIFT ; SHIFT SELECT (LSB FIRST/ MSB FIRST)
SI ; SERIAL INPUT
SO ; SERIAL OUTPUT
SOEN ; SERIAL OUTPUT ENABLE OUTPUT
STB ; ADDRESS WRITE STROBE SIGNAL INPUT
WR ; WRITE SIGNAL INPUT

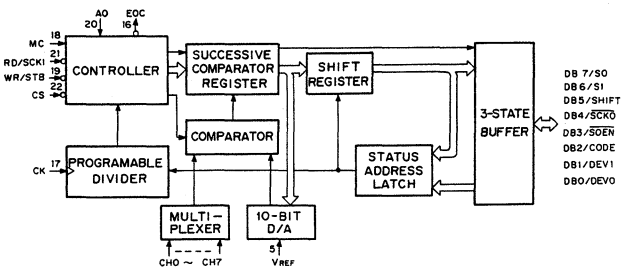

MC	MODE
0	SERIAL
1	PARALLEL

PARALLEL MODE

CS	WR	RD	AO	MODE
1	X	X	X	HIGH IMPEDANCE
0	1	1	X	HIGH IMPEDANCE
0	0	1	0	*1 ANALOG CHANNEL SELECT
0	0	1	1	*2 CODE SELECT/ *3 CLOCK RATE SELECT
0	1	0	0	*4 LOW-BYTE DATA OUTPUT
0	1	0	1	*4 HIGH-BYTE DATA OUTPUT
0	0	0	X	INHIBIT

0 ; LOW LEVEL X : DON'T CARE
1 ; HIGH LEVEL

*1 ANALOG CHANNEL

SEL2	SEL1	SEL0	MPX CHAN.
0	0	0	CH0
0	0	1	CH1
0	1	0	CH2
0	1	1	CH3
1	0	0	CH4
1	0	1	CH5
1	1	0	CH6
1	1	1	CH7

*2 CODE SELECT

CODE	CODE SELECT
0	BINARY DATA
1	2'S COMPLEMENT DATA

*3 CLOCK RATE SELECT

DEV1	DEV 0	CLOCK RATE
0	0	1
0	1	1/2
1	0	1/4
1	1	1/8

*4 LOW/HIGH-BYTE DATA

	DB7	DB 6	DB5	DB4	DB3	DB2	DB1	DB 0
HIGH-BYTE	MSB	2ND	3RD	4TH	5TH	6TH	7TH	8TH
LOW- BYTE	9TH	0	0	0	0	0	0	0

— TOP VIEW —

KV1460

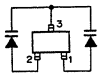

GL3E306 ; YELLOWISH GREEN

TOP VIEW (SCALE 2/1)

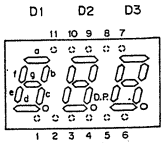

PIN. CONNECTIONS

PIN No.	FUNCTION
1	ANODE c
2	CATHODE D1
3	ANODE d
4	CATHODE D2
5	CATHODE D3
6	ANODE D.P.
7	ANODE b
8	ANODE f
9	ANODE a
10	ANODE e
11	ANODE g
–	–

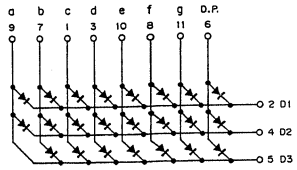

GL7E202 ; YELLOWISH GREEN

— TOP VIEW —

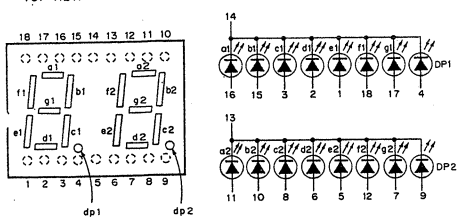

2SD1507M

74AC175SJ (NS) FLAT PACKAGE

C-MOS QUAD D-TYPE FLIP-FLOPS WITH RESET

– TOP VIEW –

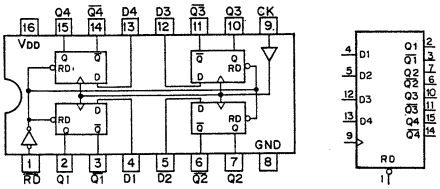

RD	CK	D	Q	$\overline{Q}$
0	X	X	0	1
1	↑	1	1	0
1	↑	0	0	1
1	0	X	Q_0	$\overline{Q}_0$

0 ; LOW LEVEL
1 ; HIGH LEVEL
X ; DON'T CARE
Q_0 ; NO CHANGE
$\overline{Q}_0$; NO CHANGE

NOTE :

TYPE	VDD
AC TYPE	+2 to +5.5 V
74ACT175 TYPE	+4.5V to 5.5 V
OTHER TYPES	+2 to +6 V

74F04SJ (NS) FLAT PACKAGE

TTL INVERTER

– TOP VIEW –

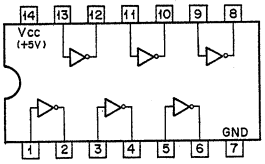

A—▷—Y = A—◁—Y

$Y = \overline{A}$

A	Y
0	1
1	0

0;LOW LEVEL
1;HIGH LEVEL

MAX232CWE (MAXIM)

RS-232 TRANSMITTER/RECEIVER

– TOP VIEW –

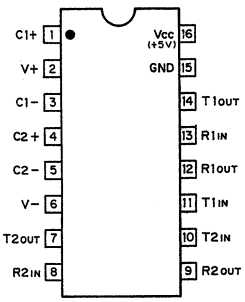

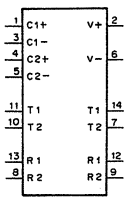

R1,2;RECEIVER 1,2
T1,2;TRANSMITTER 1,2

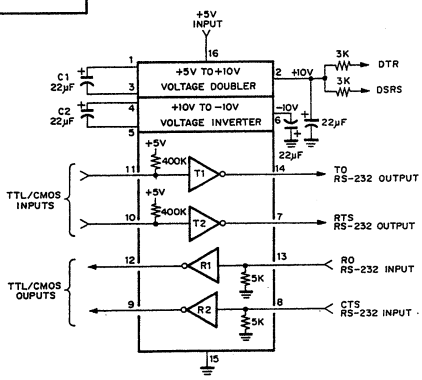

MB88346BPF (FUJITSU) FLAT PACKAGE

C-MOS 8-BIT D/A CONVERTER

– TOP VIEW –

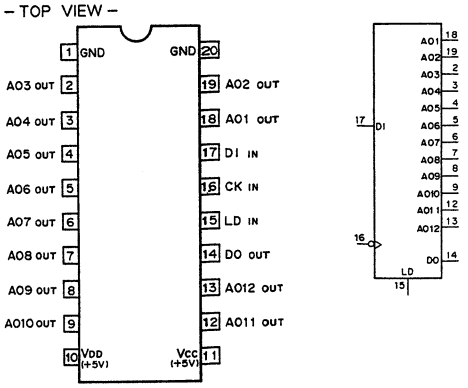

AO1 – AO12 : 8-BIT D/A OUTPUTS
CK : CLOCK INPUT
DI : SERIAL DATA INPUT
DO : DATA OUTPUT
LD : DATA LOAD CONTROL INPUT (H : LOAD)

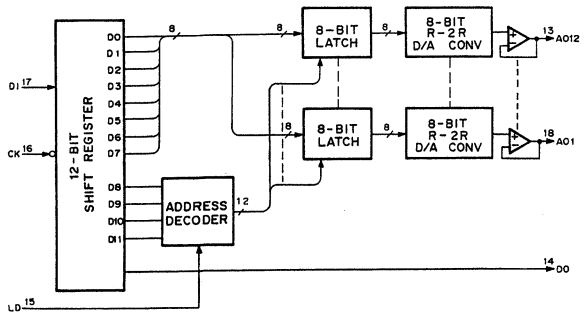

MC74F163AM (MOTOROLA) FLAT PACKAGE

TTL RESETTABLE SYNCHRONOUS 4-BIT BINARY COUNTER

– TOP VIEW –

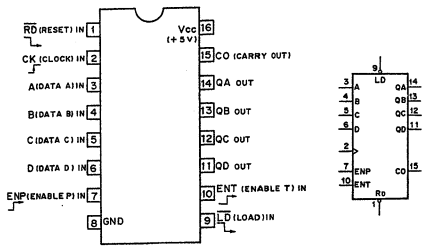

MODE SELECTION

CONTROL INPUTS				MODE
RD	LD	ENP	ENT	
0	X	X	X	RESET (SYNCHRONOUS)
1	0	X	X	PRESET (SYNCHRONOUS)
1	1	0	X	NO COUNT
1	1	X	0	NO COUNT
1	1	1	1	COUNT

0 ; LOW LEVEL
1 ; HIGH LEVEL
X ; DON'T CARE

CARRY OUTPUT "CO"

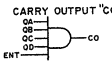

CO IS HIGH WHEN ENT INPUT IS HIGH AND COUNT IS "15".

COUNT SEQUENCE

COUNT	OUTPUTS			
	QD	QC	QB	QA
0	0	0	0	0
1	0	0	0	1
2	0	0	1	0
3	0	0	1	1
4	0	1	0	0
5	0	1	0	1
6	0	1	1	0
7	0	1	1	1
8	1	0	0	0
9	1	0	0	1
10	1	0	1	0
11	1	0	1	1
12	1	1	0	0
13	1	1	0	1
14	1	1	1	0
15	1	1	1	1

MC74F74M (MOTOROLA) FLAT PACKAGE

TTL D-TYPE FLIP FLOP WITH DIRECT SET/RESET

– TOP VIEW –

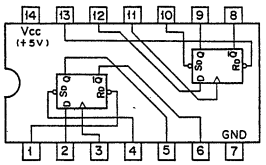

INPUTS				OUTPUTS	
$\overline{Sd}$	$\overline{Rd}$	CK	D	Qn+1	$\overline{Qn+1}$
0	1	X	X	1	0
1	0	X	X	0	1
0	0	X	X	1*	1*
1	1	↑	1	1	0
1	1	↑	0	0	1
1	1	0	X	Qn	$\overline{Qn}$

0 ; LOW LEVEL
1 ; HIGH LEVEL
X ; DON'T CARE
1* ; NONSTABLE

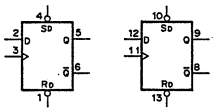

NJM7815FA (JRC) + 15V (1A)

POSITIVE VOLTAGE REGULATOR

– FRONT VIEW –

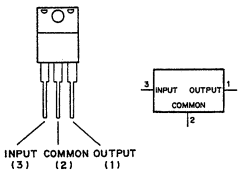

NJM7915FA (JRC) – 15V (1A)

NEGATIVE VOLTAGE REGULATOR

– FRONT VIEW –

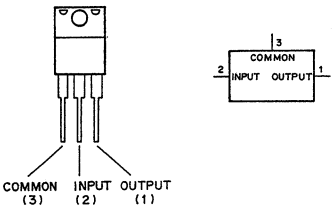

PC837 (SHARP)

PHOTOCOUNTER

– TOP VIEW –

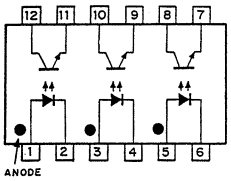

SN74HC51NS (TI) FLAT PACKAGE

C-MOS DUAL AND/OR INVERT GATE
– TOP VIEW –

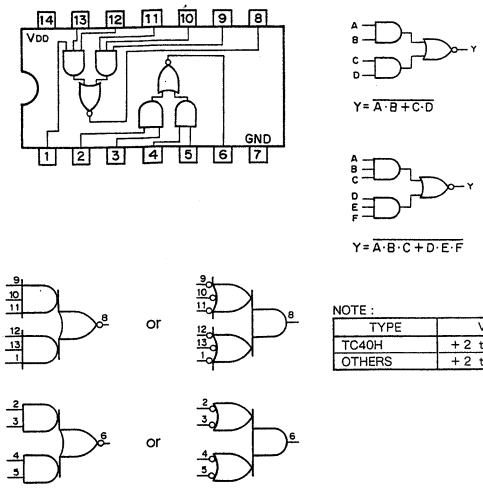

NOTE :

TYPE	VDD
TC40H	+2 to +8V
OTHERS	+2 to +6V

TC74AC04F (TOSHIBA) FLAT PACKAGE

C-MOS HEX INVERTERS
– TOP VIEW –

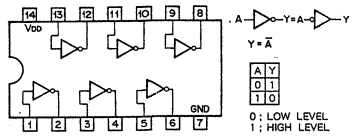

NOTE :

TYPE	VDD
74HCT04 TYPE	+5V
TC74AC04 TYPE TC74VHC04 TYPE	+2 to +5.5V
74ACT04 TYPE	+4.5 to +5.5V
OTHER TYPES	+2 to +6V

TC74HC4028F (TOSHIBA) FLAT PACKAGE

C-MOS BCD TO DECIMAL DECODER
– TOP VIEW –

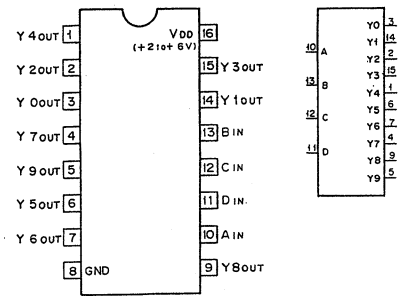

STATE	INPUTS				OUTPUTS									
	D	C	B	A	Y0	Y1	Y2	Y3	Y4	Y5	Y6	Y7	Y8	Y9
0	0	0	0	0	1	0	0	0	0	0	0	0	0	0
1	0	0	0	1	0	1	0	0	0	0	0	0	0	0
2	0	0	1	0	0	0	1	0	0	0	0	0	0	0
3	0	0	1	1	0	0	0	1	0	0	0	0	0	0
4	0	1	0	0	0	0	0	0	1	0	0	0	0	0
5	0	1	0	1	0	0	0	0	0	1	0	0	0	0
6	0	1	1	0	0	0	0	0	0	0	1	0	0	0
7	0	1	1	1	0	0	0	0	0	0	0	1	0	0
8	1	X	X	0	0	0	0	0	0	0	0	0	1	0
9	1	X	X	1	0	0	0	0	0	0	0	0	0	1

0 ; LOW LEVEL
1 ; HIGH LEVEL
X ; DON'T CARE

UPD4702G (NEC)

C-MOS INCREMENTAL ENCODER 8BIT UP DOWN COUNTER
– TOP VIEW –

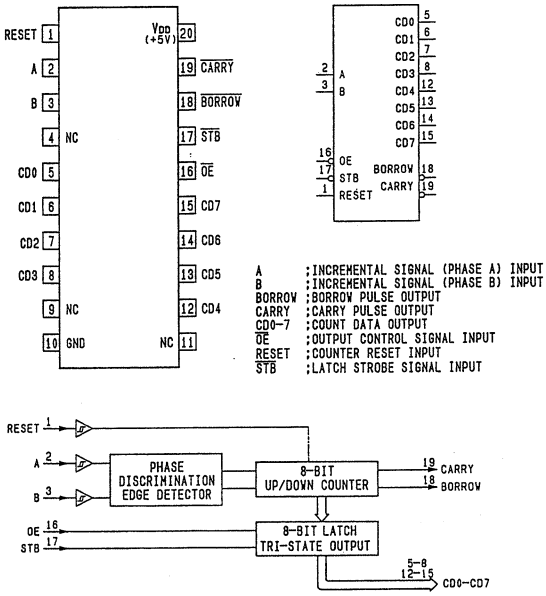

UPD4704G (NEC)

C-MOS INCREMENTAL ENCODER 8BIT UP DOWN COUNTER FOR EXTENSION
– TOP VIEW –

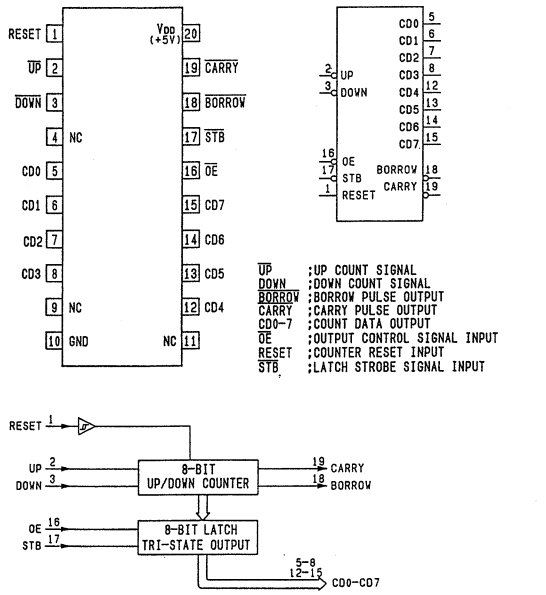

SECTION 6
SPARE PARTS

6-1. NOTES ON REPAIR PARTS

(1) Safety Related Components Warning

Components marked with ⚠ on the schematic diagrams, exploded views and electrical spare parts list are critical to safe operation. Replace these components with Sony parts whose part numbers appear in this manual or in service bulletins and service manual supplement published by Sony.

(2) Standardization of Parts

Repair parts supplied from Sony Parts Center may not be always identical with the part which actually in use due to "accommodating the improved parts and/or engineering changes" or "standardization of genuine parts". This manual's exploded views and electrical spare parts list are indicating the parts number of "the standardization genuine parts at present".

(3) Stocked of Parts

The parts marked with "S" in the SP column of the exploded views and electrical spare parts list are normally required for routine service work. Order for parts marked with "O" will be processed, but allow for additional delivery time.

(4) Units of Capacitors, Inductors, and Resistors

The following units are omitted in the schematic diagrams, exploded views, and electrical parts lists unless otherwise specified;

Capacitor : μF
Inductor : μH
Resistor : Ω

(1) 安全重要部品

回路図、分解図、電気部品表中、⚠印の部品は安全性を維持するために重要な部品です。従ってこれらの部品を交換するときは必ず指定の部品と交換してください。

(2) 部品の共通化

ソニーから供給される部品は、セットに実装されているものと異なることがあります。これは部品の共通化、改良等によるものです。分解図や電気部品表中には現時点での共通化された部品が記載されています。

(3) 部品の在庫

リスト中、SP欄が"S"で示されている部品は常時在庫しています。SP欄が"O"で示されている部品は交換頻度が低い部品ですので、一般には在庫しません。そのため、納期が長くなることがあります。

(4) コンデンサ、インダクター、抵抗の単位

回路図、分解図、電気部品表中、特に明記したものを除き、下記の単位は省略されています。

コンデンサ : μF
インダクター : μH
抵抗 : Ω

6-2. EXPLODED VIEWS

DMX-B4008/B4016 CONSOLE

No.	Part No.	SP	Description
1	3-182-970-02	o	COVER (CH), BOTTOM FRONT
2	3-182-971-03	o	COVER (MAS), BOTTOM FRONT
3	3-182-972-02	o	RAIL (L), CH
4	3-182-973-02	o	RAIL (M), CH
5	3-183-015-03	o	PANEL, HA BLIND
6	3-183-016-03	o	PANEL, LOCATER BLIND
7	3-183-019-01	o	PLATE, SIDE (R), ORNAMENTAL
8	3-183-020-01	o	PLATE, SIDE (L), ORNAMENTAL
9	3-183-025-02	o	RAIL (M), MAS
10	3-183-026-02	o	RAIL (L), MAS

DMBK-4005/DMBK-4006 (OPTION)

51	X-3167-354-1	o	SLEEVE (R) ASSY
52	X-3167-355-1	o	SLEEVE (L) ASSY
53	X-3167-356-1	o	PAD (MAS) ASSY
54	X-3167-357-1	o	PAD (CH) ASSY
55	X-3167-357-1	o	PAD (CH) ASSY (DMBK-4006 only)

DMBK-4012 (OPTION)

61	A-8276-807-A	o	MOUNTED CIRCUIT BOARD, VR-163
62	1-649-759-11	o	PRINTED CIRCUIT BOARD, SW-602
63	3-180-426-01	s	KNOB CAP (ab 13)
64	3-180-434-01	s	KNOB (ab 13)
65	3-182-957-01	s	WASHER, VOLUME
66	3-183-090-02	o	PANEL, HA
67	3-184-241-01	o	FILM, MIC ON
68	4-888-884-21	s	CAP, KNOB
69	4-888-885-31	s	KNOB
70	4-928-315-01	s	KEY TOP
71	4-937-336-51	o	HOLDER, LED

ORNAMENTAL BLOCK DMX-B4008/B4016 CONSOLE
DMBK-4005 (OPTION), DMBK-4006 (OPTION), DMBK-4012 (OPTION)

(1) ORNAMENTAL BLOCK, DMBK-4005 (OPTION), DMBK-4006 (OPTION), DMBK-4012 (OPTION)

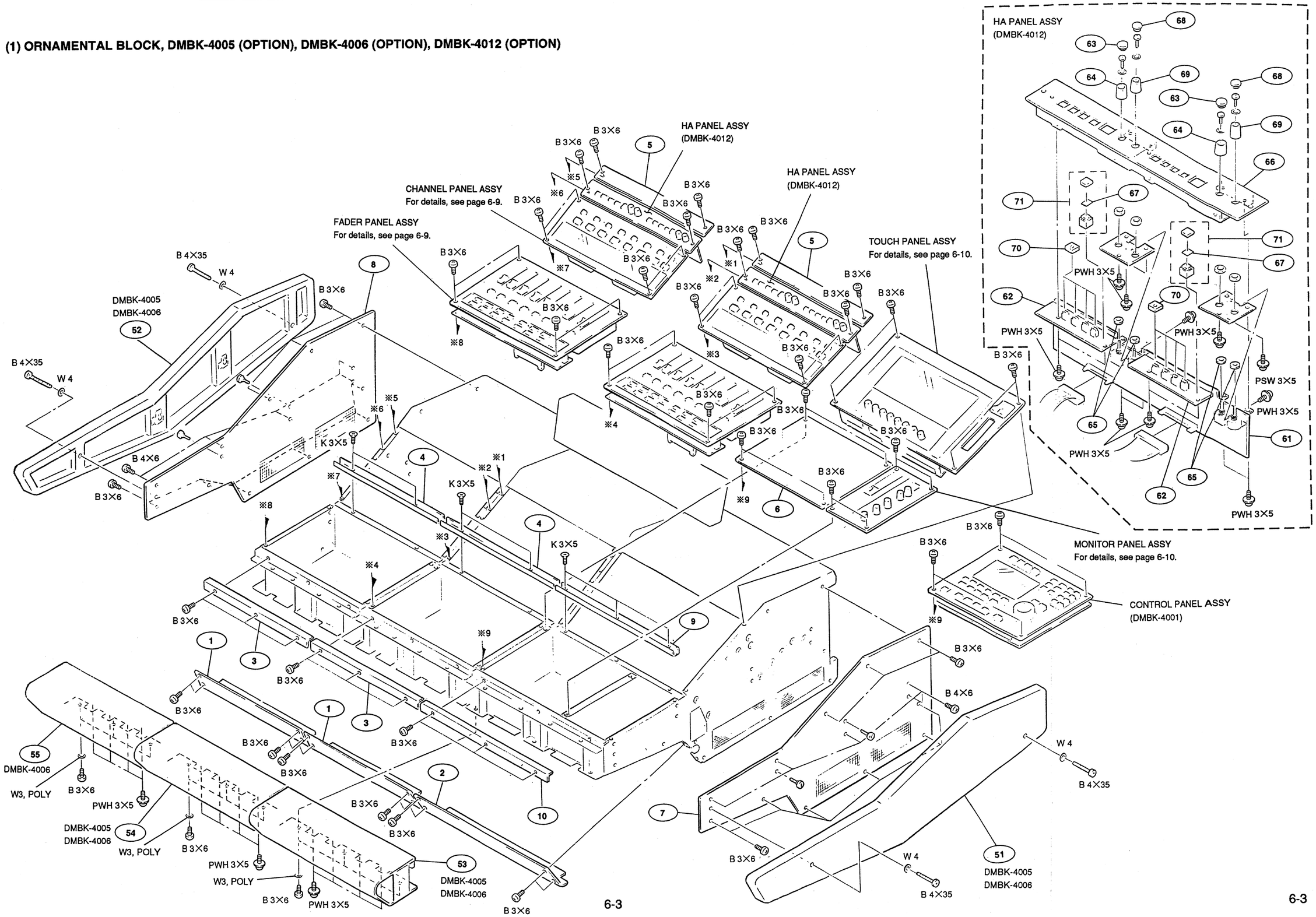

6-3

CHASSIS BLOCK
DMX-B4008/B4016 CONSOLE

(2) CHASSIS BLOCK

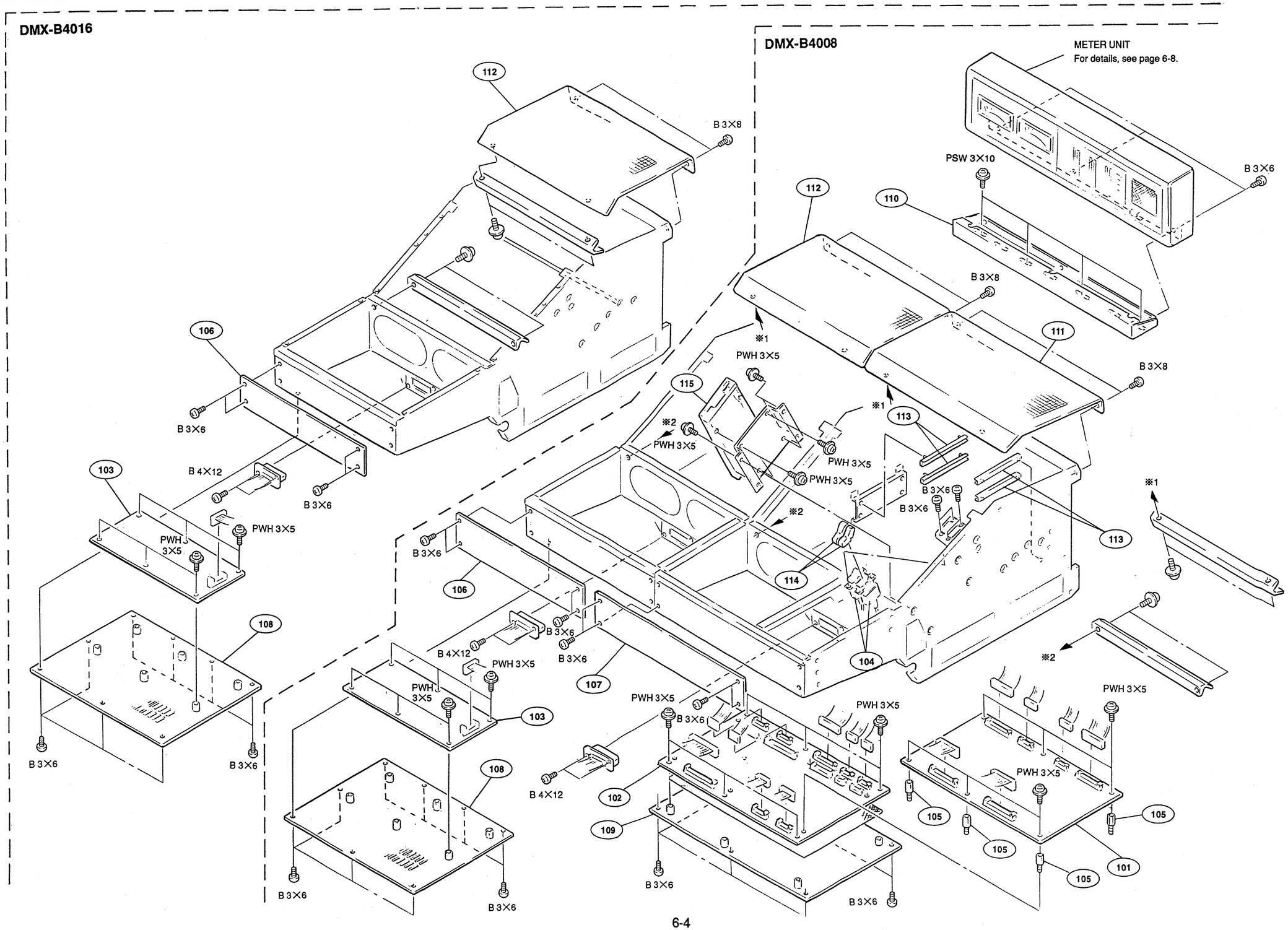

6-4

No.	Part No.	SP	Description
101	A-8275-415-A	o	MOUNTED CIRCUIT BOARD, CPU-145 (FOR DMX-B4008)
	A-8275-630-A	o	MOUNTED CIRCUIT BOARD, CPU-145A (FOR DMX-B4016)
102	A-8275-416-A	o	MOUNTED CIRCUIT BOARD, IF-413
103	A-8275-421-A	o	MOUNTED CIRCUIT BOARD, PS-312
104	1-570-117-41	s	SWITCH, ROCKER (AC POWER)
105	2-375-791-01	o	SUPPORT
106	3-182-974-01	o	ORNAMENTAL FRONT PLATE (CH)
107	3-183-018-01	o	ORNAMENTAL FRONT PLATE (MAS)
108	3-183-021-01	o	PANEL (CH), BOTTOM
109	3-183-022-03	o	PANEL (MAS), BOTTOM
110	3-183-040-01	o	BRACKET, A METER
111	3-183-041-03	o	COVER (MAS), TOP
112	3-183-042-03	o	COVER (CH), TOP
113	3-673-676-21	o	RAIL, PC BOARD GUIDE
114	3-688-814-11	s	CAP, SWITCH
115	8-422-940-01	s	DRIVE,FLOPPY DISK MPF420-2/120
116	3-184-699-01	o	GASKET (300284)

(3) REAR PANEL BLOCK, DMBK-4012 (OPTION)

No.	Part No.	SP	Description
201	A-8275-417-A	o	MOUNTED CIRCUIT BOARD, MOA-7A (for UC/EK)
	A-8275-418-A	o	MOUNTED CIRCUIT BOARD, MOA-7B (for J)
202	A-8276-796-A	o	MOUNTED CIRCUIT BOARD, CN-838
203	A-8276-797-A	o	MOUNTED CIRCUIT BOARD, CN-839
204	A-8276-798-A	o	MOUNTED CIRCUIT BOARD, CN-840A (for UC/EK)
	A-8276-799-A	o	MOUNTED CIRCUIT BOARD, CN-840B (for J)
205	X-4801-204-0	o	TERMINAL ASSY
206	3-182-976-01	o	PANEL, PW SUB
207	3-182-997-03	o	PANEL, PW
208	3-183-014-03	o	PANEL (CH), PW/BLANK
209	3-183-017-01	o	PANEL, CN BLIND
210	3-183-023-02	o	PANEL (MAS), REAR
211	3-183-024-03	o	PANEL (CH), REAR (for DMX-B4008)
	3-183-024-12	o	PANEL (CH), REAR (for DMX-B4016)

DMBK-4012 (OPTION)

251	A-8275-432-A	o	MOUNTED CIRCUIT BOARD, AD-100
252	2-280-622-71	o	SUPPORT (M3), HEXAGON
253	3-183-089-02	o	PLATE, SHIELD, PC BOARD
254	4-879-917-00	o	STAY, PC BOARD
255	3-184-855-01	o	COOLING PLATE

REAR PANEL BLOCK, DMBK-4012 (OPTION)
DMX-B4008/B4016 CONSOLE

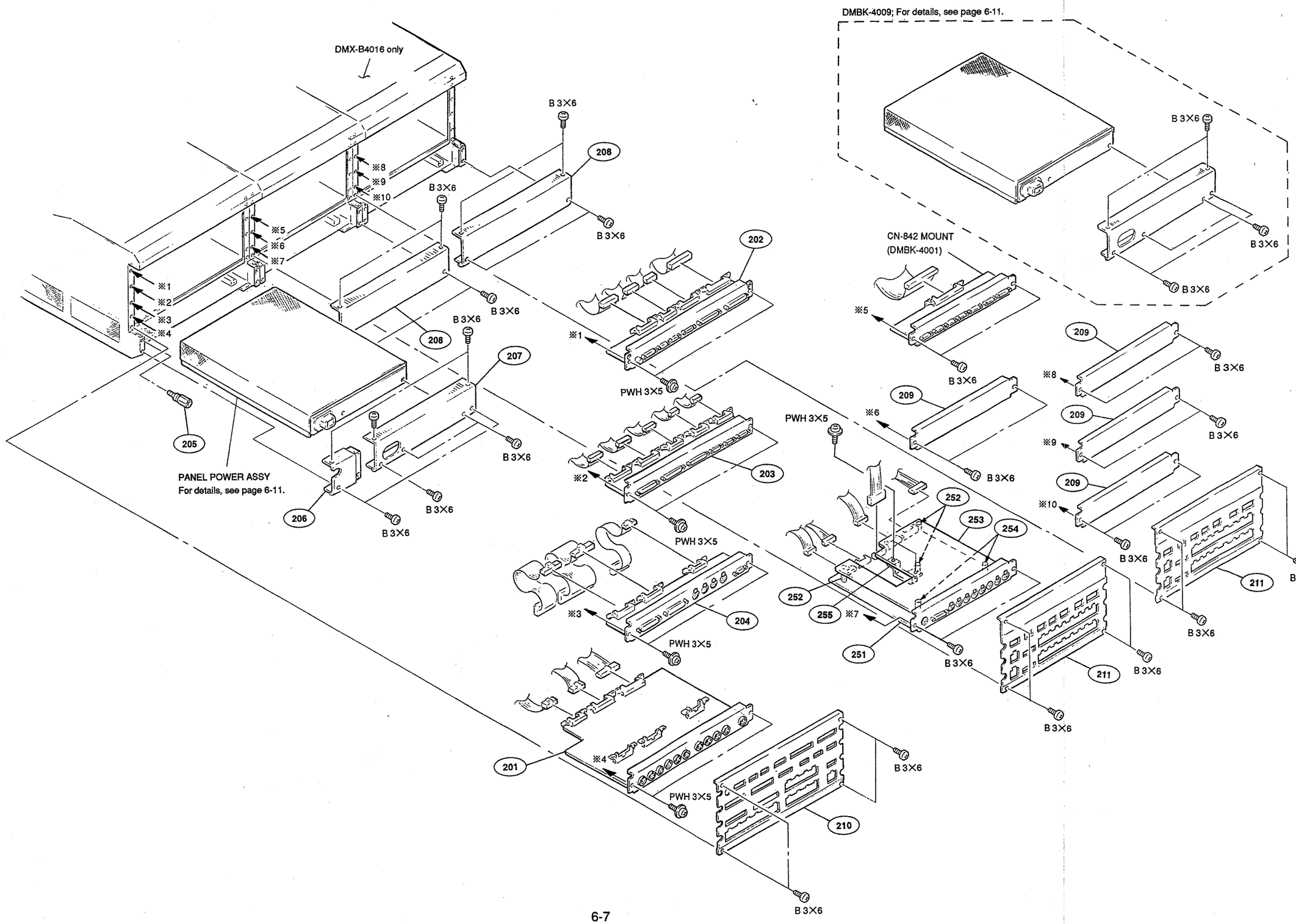

6-7

 METER UNIT, DMBK-4003 (OPTION)

(4) METER UNIT, DMBK-4003 (OPTION)

No.	Part No.	SP	Description
301	A-8275-422-A	o	MOUNTED CIRCUIT BOARD, IF-421
302	A-8275-423-A	o	MOUNTED CIRCUIT BOARD, MT-88
303	X-3167-429-1	o	PANEL ASSY, MT-88(A)
304	1-503-291-00	s	SPEAKER
305	3-180-281-01	o	SUPPORT, PCB
306	3-182-954-01	o	SPEAKER, GRILLE
307	3-182-981-01	o	PLATE, BLIND
308	3-182-982-01	o	BRACKET, B METER
309	3-183-003-03	o	TOP SHEET BLANK
310	3-183-046-02	o	METER, REAR COVER
311	X-3167-467-1	o	PANEL ASSY, METER
313	4-927-278-01	s	KEY TOP

DMBK-4003 (OPTION)

351	X-3167-409-1	o	PANEL ASSY, VU METER
352	1-520-516-11	s	METER, VU
353	1-649-774-11	o	PRINTED CIRCUIT BOARD, MT-94
354	3-182-985-01	o	VU METER, REAR PANEL
355	4-612-636-01	s	SCREW, CONNECTOR FITTING

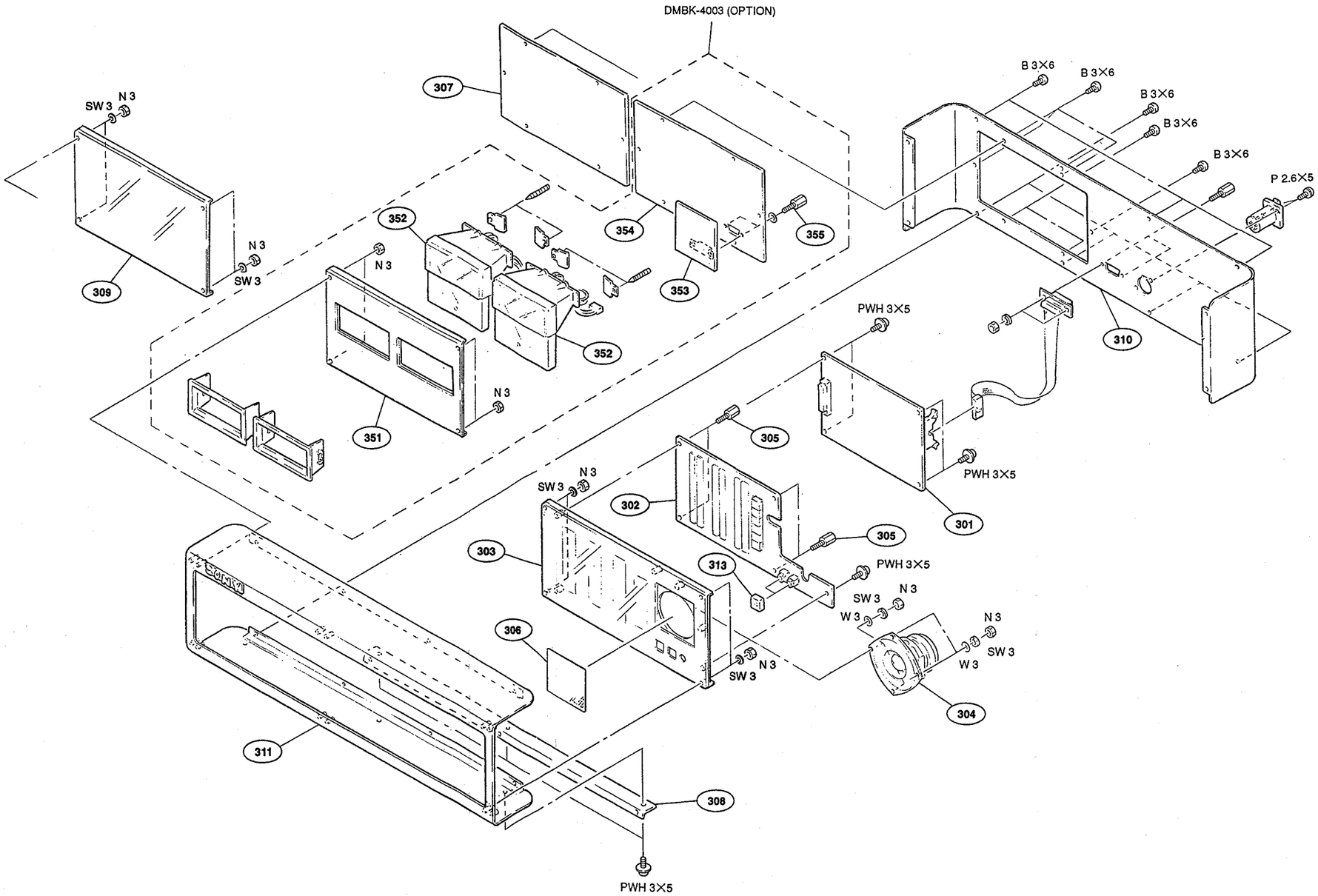

(5) CHANNEL PANEL ASSY

No.	Part No.	SP	Description
401	A-8275-405-A	o	MOUNTED CIRCUIT BOARD, KY-225
402	A-8275-406-A	o	MOUNTED CIRCUIT BOARD, LED-156
403	2-280-622-01	o	SUPPORT (M3), HEXAGON
404	3-182-953-02	o	FILM, MUTE
405	3-182-994-03	o	LENS, LED
406	3-183-050-02	o	PANEL, CHANNEL INDICATION
407	4-927-278-01	s	KEY TOP

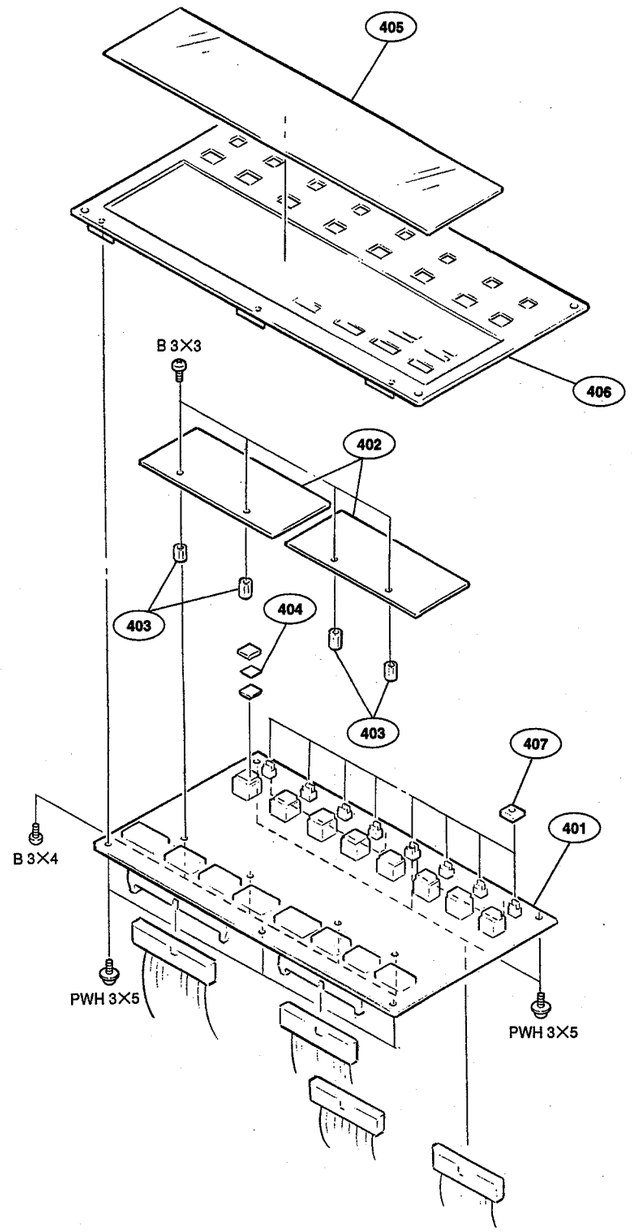

(6) FADER PANEL ASSY

No.	Part No.	SP	Description
501	A-8276-790-A	o	MOUNTED CIRCUIT BOARD, SW-604
502	A-8276-791-A	o	MOUNTED CIRCUIT BOARD, SW-605
503	1-241-009-11	s	RES, VAR, SLIDE 10K
504	1-572-609-11	s	SWITCH, PUSH (ILLUMINATION)
505	1-572-609-21	s	SWITCH, PUSH (ILLUMINATION)
506	3-183-048-02	o	PANEL, FADER
507	4-927-278-01	s	KEY TOP
508	4-937-102-01	s	KNOB, FADER

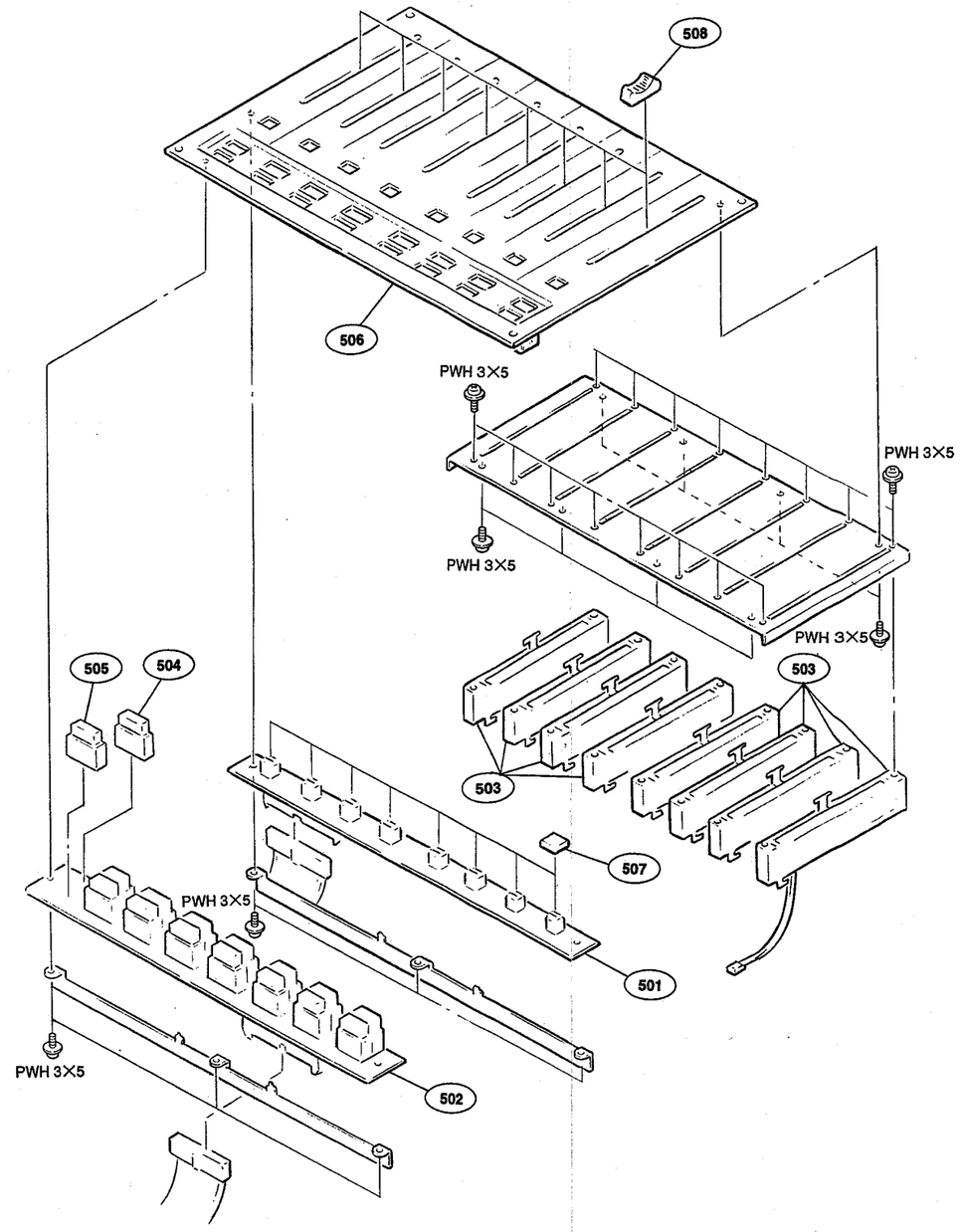

(7) TOUCH PANEL ASSY

No.	Part No.	SP	Description
601	A-8275-414-A	o	MOUNTED CIRCUIT BOARD, IF-414 (FOR DMX-B4008)
	A-8275-629-A	o	MOUNTED CIRCUIT BOARD, IF-414A (FOR DMX-B4016)
602	1-466-954-11	s	DISPLAY UNIT, EL
603	1-692-812-11	s	PANEL, TOUCH
604	3-182-959-01	s	CAP, DIA. 13
605	3-182-960-01	s	KNOB, DIA. 13
606	3-182-987-01	o	BRACKET, IF-414 SW
607	3-183-012-01	o	COVER, DISPLAY
608	X-3167-433-2	o	PANEL ASSY, DISPLAY
609	3-831-441-XX	s	TAPE

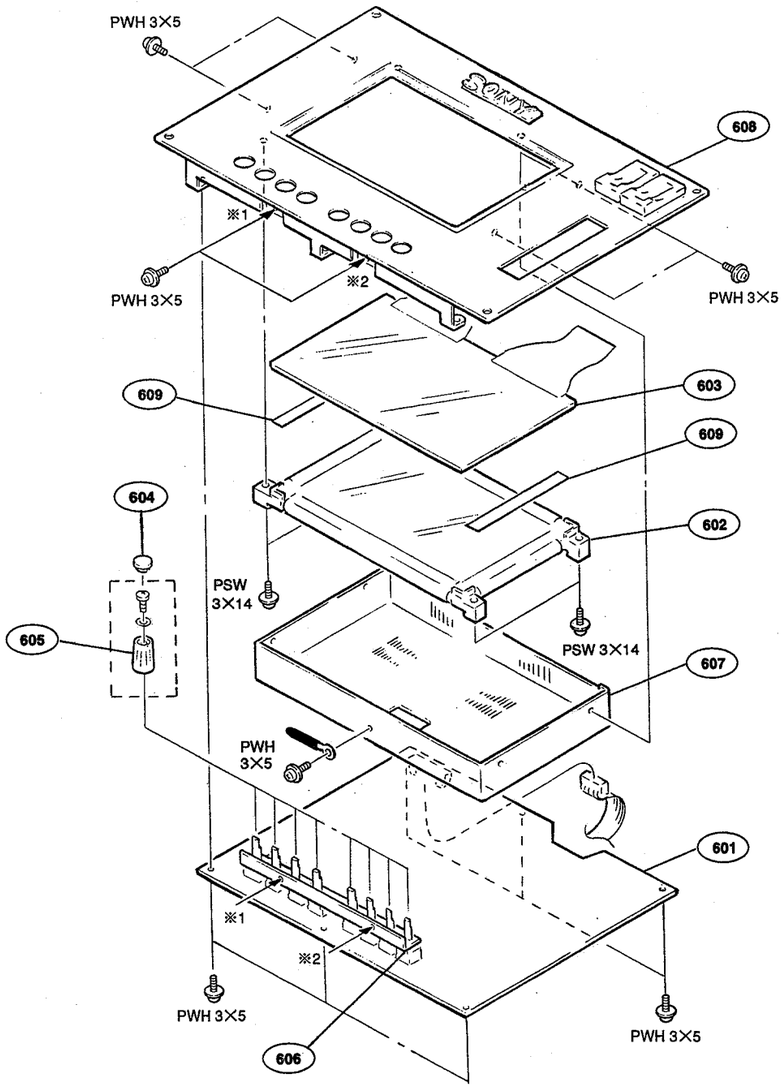

(8) MONITOR PANEL ASSY

No.	Part No.	SP	Description
701	A-8276-792-A	o	MOUNTED CIRCUIT BOARD, VR-165
702	A-8276-793-A	o	MOUNTED CIRCUIT BOARD, SW-606
703	1-241-009-11	s	RES, VAR, SLIDE 10K
704	1-609-885-00	o	PRINTED CIRCUIT BOARD, MIC
705	1-649-753-11	o	PRINTED CIRCUIT BOARD, CN-841
706	3-180-426-01	s	KNOB CAP (ab 13)
707	3-180-434-01	s	KNOB (ab 13)
709	3-182-995-03	o	BRACKET, VOL
710	3-183-011-02	o	PANEL, MONITOR
711	3-574-761-00	s	HOLDER, MICROPHONE
712	4-888-884-21	s	CAP, KNOB
713	4-888-885-31	s	KNOB
714	4-904-321-01	o	COVER, MICROPHONE
715	4-937-102-11	s	KNOB, FADER

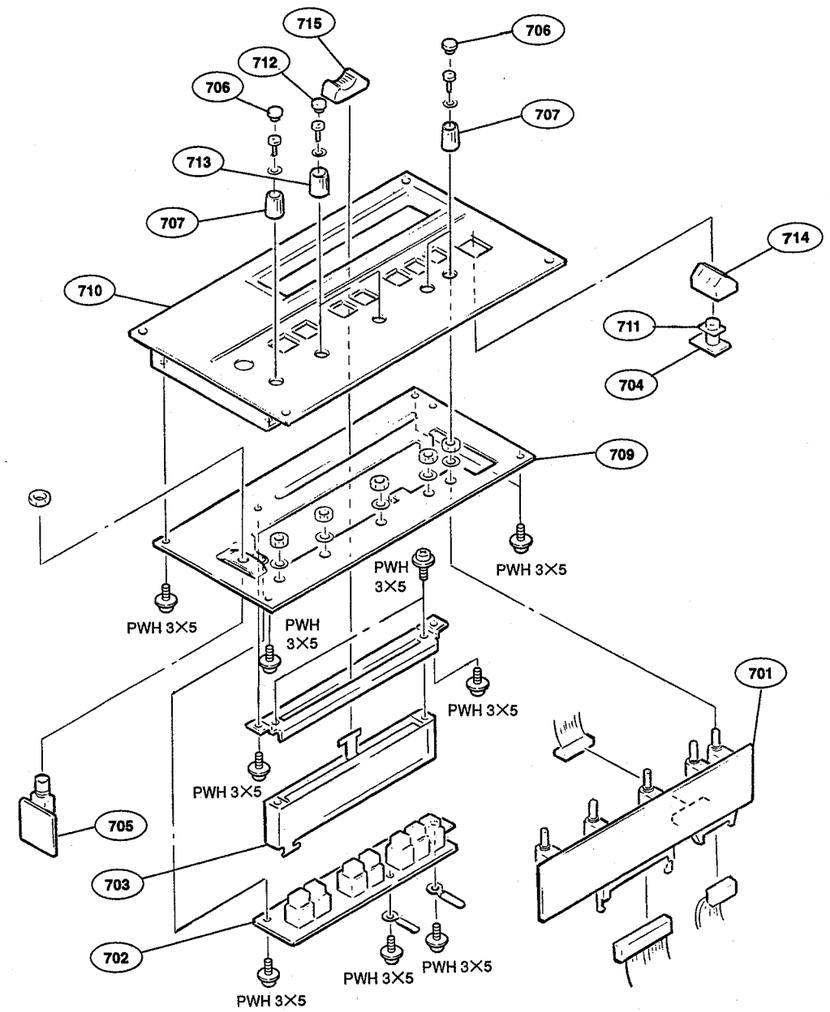

(9) PANEL POWER ASSY, DMBK-4009 (OPTION)

No.	Part No.	SP	Description
1601	⚠1-413-915-11	s	SWITCHING REG.(TDK.FAW05-20R)
1602	⚠1-413-918-11	s	SWITCHING REG.(TDK.FAW12-2R1)
1603	⚠1-413-919-11	s	SWITCHING REG.(TDK.FAW18-2R8)
1604	⚠1-424-451-11	s	FILTER, NOISE (GL-2060M)
1605	⚠1-691-186-11	o	HOUSING, CONNECTOR 24P
1606	2-990-241-02	s	HOLDER (A), PLUG
1607	3-182-952-01	s	NUT (24), PLATE
1608	3-182-997-03	o	PANEL, PW
1609	3-664-223-00	o	SUPPORT, PC BOARD
1610	3-669-602-00	s	SPRING, COMPRESSION

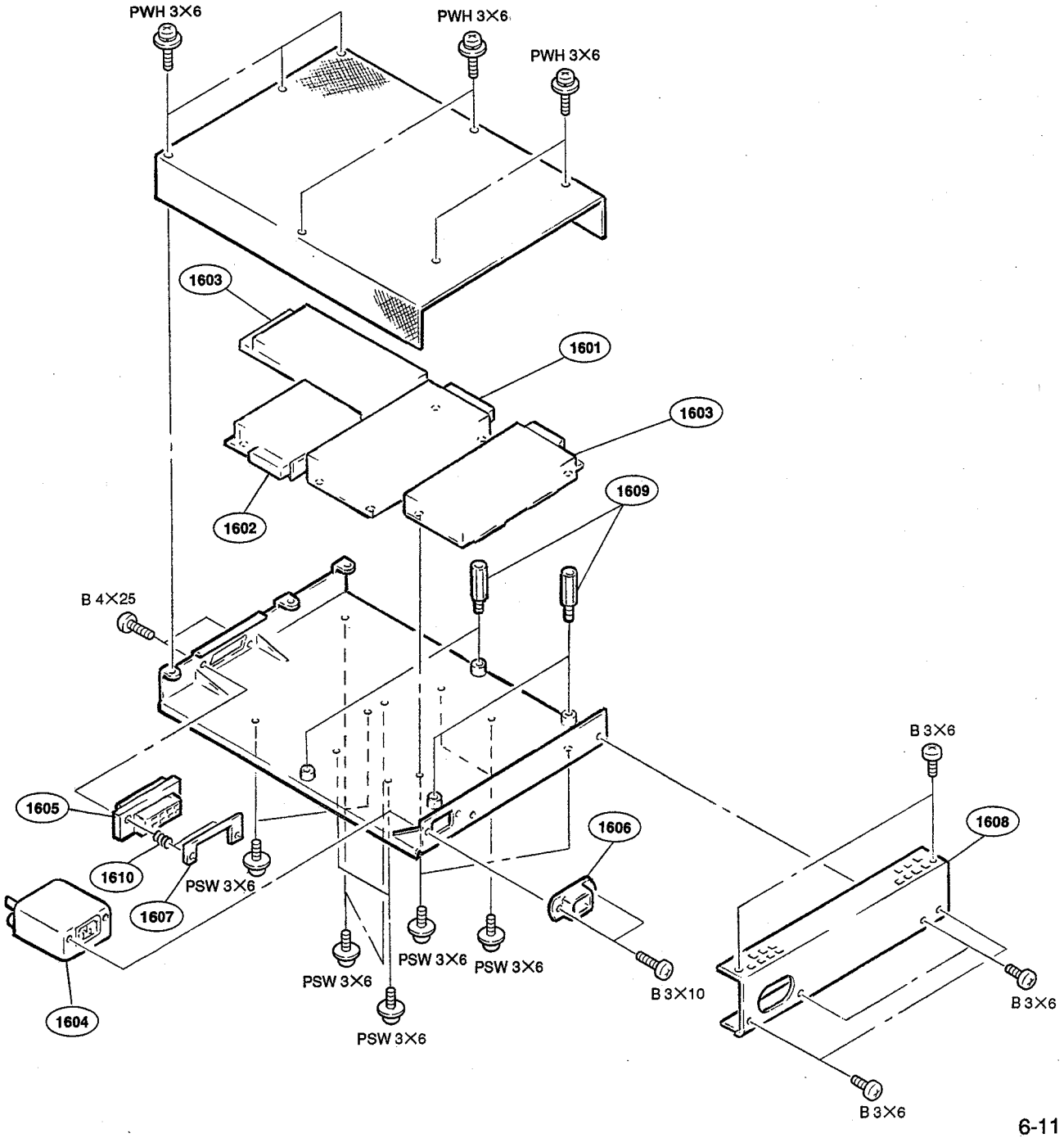

DMX-B4008 PROCESSOR UNIT

(1) MAIN BLOCK

No.	Part No.	SP	Description
801	A-7570-046-A	s	TABLE ASSY, LOCK
802	A-7570-051-A	s	HANDLE ASSY (W), SWITCHING
803	A-8275-407-A	o	MOUNTED CIRCUIT BOARD, CPU-164
804	A-8275-408-A	o	MOUNTED CIRCUIT BOARD, DIO-26
805	A-8275-409-A	o	MOUNTED CIRCUIT BOARD, MIX-15
806	X-2127-223-2	o	ANGLE ASSY (4U), RACK
807	X-2182-907-3	o	STOPPER ASSY
808	X-3316-715-1	s	FOOT ASSY
809	⚠1-413-955-11	s	SWITCHNG REG. (MRW-171-1)
810	1-569-196-11	o	HOUSING, CONNECTOR 3P
811	⚠1-570-117-31	s	SWITCH, SEESAW (AC POWER)
812	1-636-210-11	o	PRINTED CIRCUIT BOARD, DP-131
813	⚠1-691-940-11	o	HOUSING, CONNECTOR 16P
815	2-139-101-01	o	SHAFT (4U), HINGE
816	2-139-127-01	s	HINGE (4U)
817	3-184-418-01	o	PLATE (D450), TOP
818	2-139-192-01	s	FRAME, INDICATOR WINDOW
819	2-139-193-02	s	WINDOW, INDICATOR
820	2-146-576-01	o	GUIDE
821	2-146-577-01	o	LEVER (1), PC BOARD
822	2-249-353-00	s	COVER, LAMP
825	3-169-099-01	o	RAIL, PC BOARD GUIDE
826	3-172-088-02	o	SPACER (L)
827	3-172-089-01	o	HANDLE
828	3-184-342-02	o	CHASSIS (4U)
829	3-174-468-01	o	RAIL (60), PC BOARD GUIDE
830	3-174-923-01	o	LEVER (2), PC BOARD
831	3-183-891-01	o	NUT (16), CN PLATE
833	3-177-060-02	o	PLATE, SHIELD, PC BOARD
834	3-183-002-02	o	PANEL (4U), FRONT
835	3-718-322-02	o	EMBLEM, SONY
836	4-378-341-01	o	COVER, SWITCH
837	X-3167-444-1	o	BRACKET ASSY, POWER

MAIN BLOCK
DMX-B4008 PROCESSOR

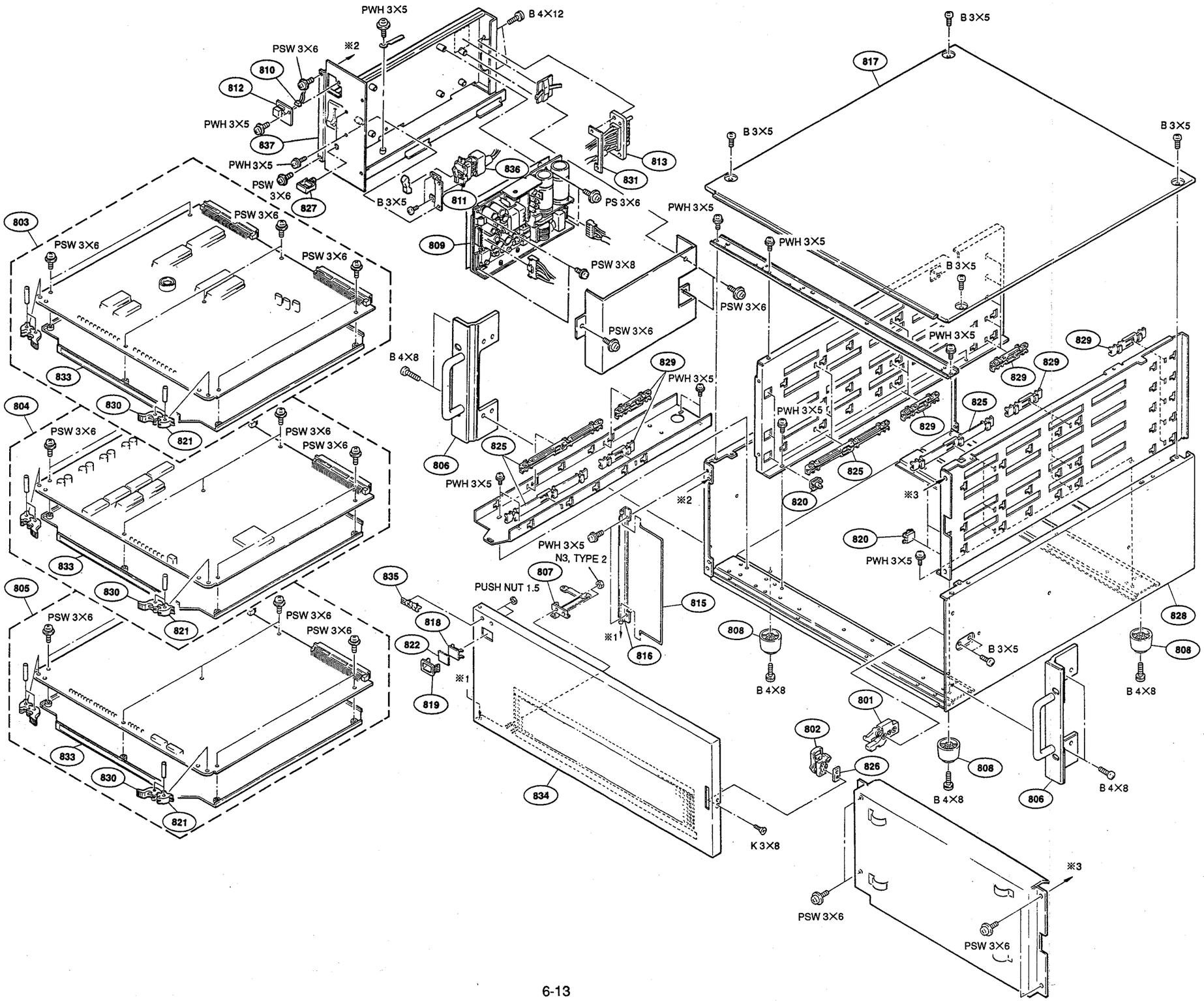

6-13

CONNECTOR PANEL BLOCK
DMX-B4008 PROCESSOR

(2) CONNECTOR PANEL BLOCK

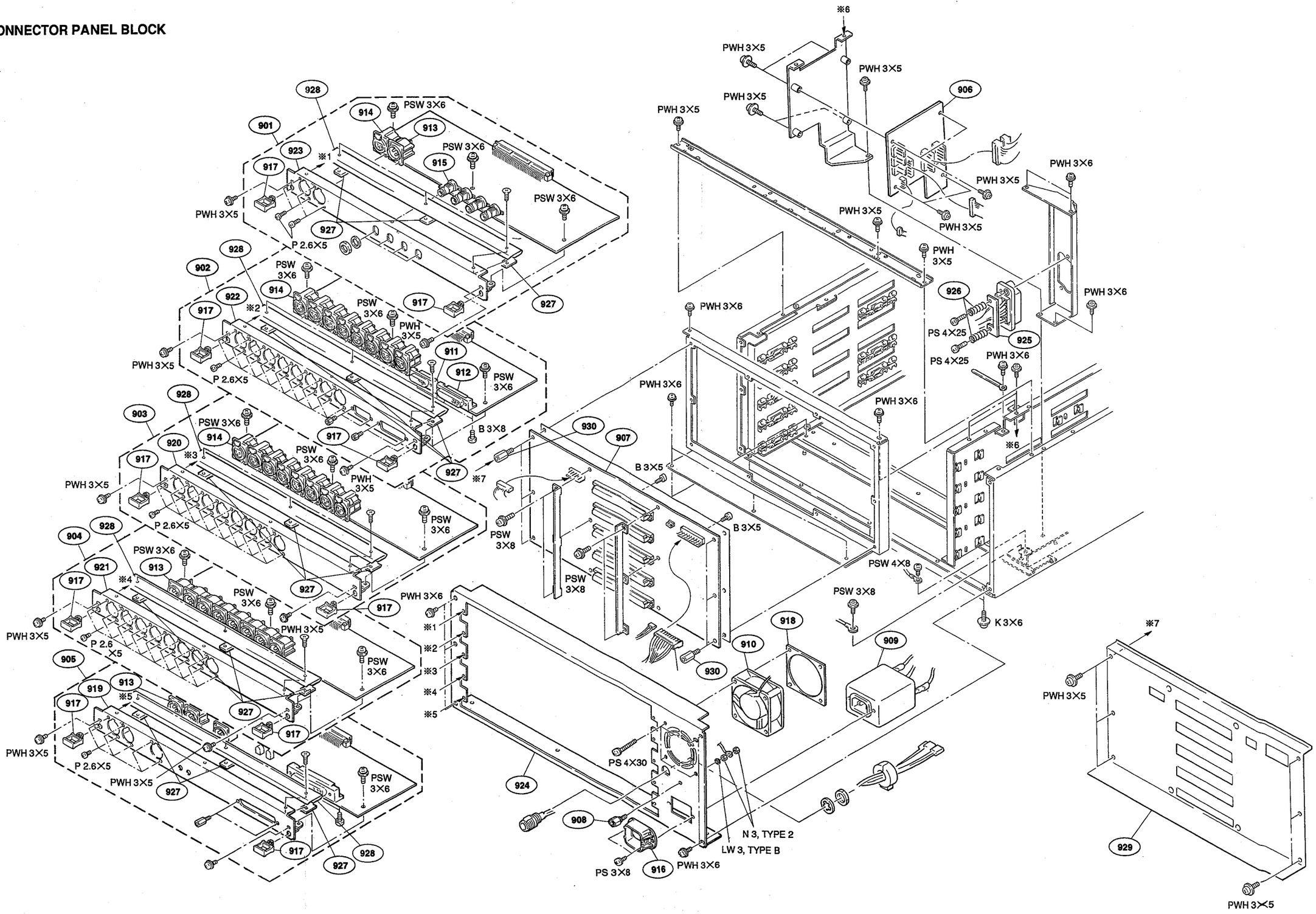

6-14

No.	Part No.	SP	Description
901	A-8275-410-A	o	MOUNTED CIRCUIT BOARD, CN-833
902	A-8275-411-A	o	MOUNTED CIRCUIT BOARD, CN-834
903	A-8275-412-A	o	MOUNTED CIRCUIT BOARD, CN-835
904	A-8275-413-A	o	MOUNTED CIRCUIT BOARD, CN-836
905	A-8275-419-A	o	MOUNTED CIRCUIT BOARD, CN-837
906	A-8275-420-A	o	MOUNTED CIRCUIT BOARD, PS-313
907	A-8276-795-A	o	MOUNTED CIRCUIT BOARD, MB-481
908	X-4801-204-0	o	TERMINAL ASSY
909	1-424-451-11	s	FILTER, NOISE (GL-2060M)
910	1-541-891-11	s	MOTOR, DC FAN (WITH FG)
911	1-563-771-11	s	SOKET, D-SUB CONNECTOR 15P
912	1-563-772-11	o	SOKET, D-SUB CONNECTOR 25P
913	1-568-005-11	s	CONNECTOR, XLR TYPE 3P
914	1-568-006-11	s	CONNECTOR, XLR TYPE 3P
915	1-580-347-11	s	CONNECTOR, BNC
916	2-990-241-02	s	HOLDER (A), PLUG
917	3-172-089-01	o	HANDLE
918	3-177-016-01	o	NUT (F), PLATE
919	3-182-989-03	o	PANEL, CN-837
920	3-182-990-02	o	PANEL, CN-835
921	3-182-990-12	o	PANEL, CN-836
922	3-182-991-02	o	PANEL, CN-834
923	3-182-992-03	o	PANEL, CN-833
924	3-183-045-03	o	PANEL, REAR
925	3-183-891-01	o	NUT (16), CN PLATE
926	3-669-602-00	s	SPRING, COMPRESSION
927	3-184-772-01	o	NUT, PLATE
928	3-184-773-01	o	CN, PLATE, SHIELD
929	3-184-858-01	o	SHIELD, MB-481
930	4-886-542-00	o	SUPPORT

DMX-B4016 PROCESSOR UNIT

(1) MAIN BLOCK

No.	Part No.	SP	Description
1001	A-7570-046-A	s	TABLE ASSY, LOCK
1002	A-7570-051-A	s	HANDLE ASSY (W), SWITCHING
1003	A-8275-631-A	o	MOUNTED CIRCUIT BOARD, CPU-144
1004	A-8275-633-A	o	MOUNTED CIRCUIT BOARD, MIX-16
1005	A-8275-636-A	o	MOUNTED CIRCUIT BOARD, IPM-48
1006	A-8275-641-A	o	MOUNTED CIRCUIT BOARD, PS-314
1007	X-2182-907-3	o	STOPPER ASSY
1008	X-3165-217-1	o	ANGLE ASSY, RACK
1009	X-3316-715-1	s	FOOT ASSY
1010	1-541-891-11	s	MOTOR, DC FAN (WITH FG)
1011	1-636-210-11	o	PRINTED CIRCUIT BOARD, DP-131
1013	2-139-192-01	s	FRAME, INDICATOR WINDOW
1014	2-139-193-02	s	WINDOW, INDICATOR
1015	2-146-576-01	o	GUIDE
1016	2-146-577-01	o	LEVER (1), PC BOARD
1017	2-249-353-00	s	COVER, LAMP
1018	3-169-099-01	o	RAIL, PC BOARD GUIDE
1019	3-171-771-01	o	HINGE, PANEL
1020	3-171-772-01	o	SHAFT (7U), HINGE
1021	3-174-468-01	o	RAIL (60), PC BOARD GUIDE
1022	3-174-923-01	o	LEVER (2), PC BOARD
1023	3-184-323-01	o	PANEL (7U), FRONT
1024	3-184-328-01	o	PLATE, SIDE (RIGHT)
1025	3-184-329-01	o	PLATE, SIDE (LEFT)
1026	3-184-332-02	o	PLATE, BOTTOM
1027	3-184-334-01	o	PLATE, TOP
1028	3-184-844-01	o	PLATE, BLIND, POWER
1029	3-669-602-00	s	SPRING, COMPRESSION
1030	3-687-263-01	s	SCREW, STEP
1031	3-718-322-02	o	EMBLEM, SONY
1032	4-030-359-01	o	HEAT SINK, H. PIN
1033	4-314-320-00	o	HOLDER, WIRE
1034	4-826-553-01	s	SPRING (B), COMPRESSION

DMBK-4010 (OPTION)

1051	A-8275-633-A	o	MOUNTED CIRCUIT BOARD, MIX-16
1052	A-8275-636-A	o	MOUNTED CIRCUIT BOARD, IPM-48
1016	2-146-577-01	o	LEVER (1), PC BOARD
1021	3-174-923-01	o	LEVER (2), PC BOARD

DMBK-4011 (OPTION)

1051	A-8275-633-A	o	MOUNTED CIRCUIT BOARD, MIX-16
1016	2-146-577-01	o	LEVER (1), PC BOARD
1021	3-174-923-01	o	LEVER (2), PC BOARD

RACK POWER ASSY, DMBK-4008 (OPTION)

1061	⚠1-413-919-11	s	SWITCHING REG.(TDKFAW18-2R8)
1062	⚠1-413-956-11	s	SWITCHING REG.(TDKFAW05-30R)
1063	⚠1-570-384-11	s	SWITCH, SEESAW (AC POWER)
1064	⚠1-691-940-11	o	HOUSING, CONNECTOR 16P
1065	2-249-250-00	s	CLIP (SMALL), CANOE
1066	3-172-089-01	o	HANDLE
1067	3-172-691-01	o	BRACKET, SWITCH
1068	3-183-891-01	o	NUT (16), CN PLATE
1069	3-688-814-01	s	CAP, SWITCH
1070	4-378-341-01	o	COVER, SWITCH
1071	4-604-107-11	o	GUARD, POWER SW

RACK POWER ASSY, DMBK-4008 (OPTION)

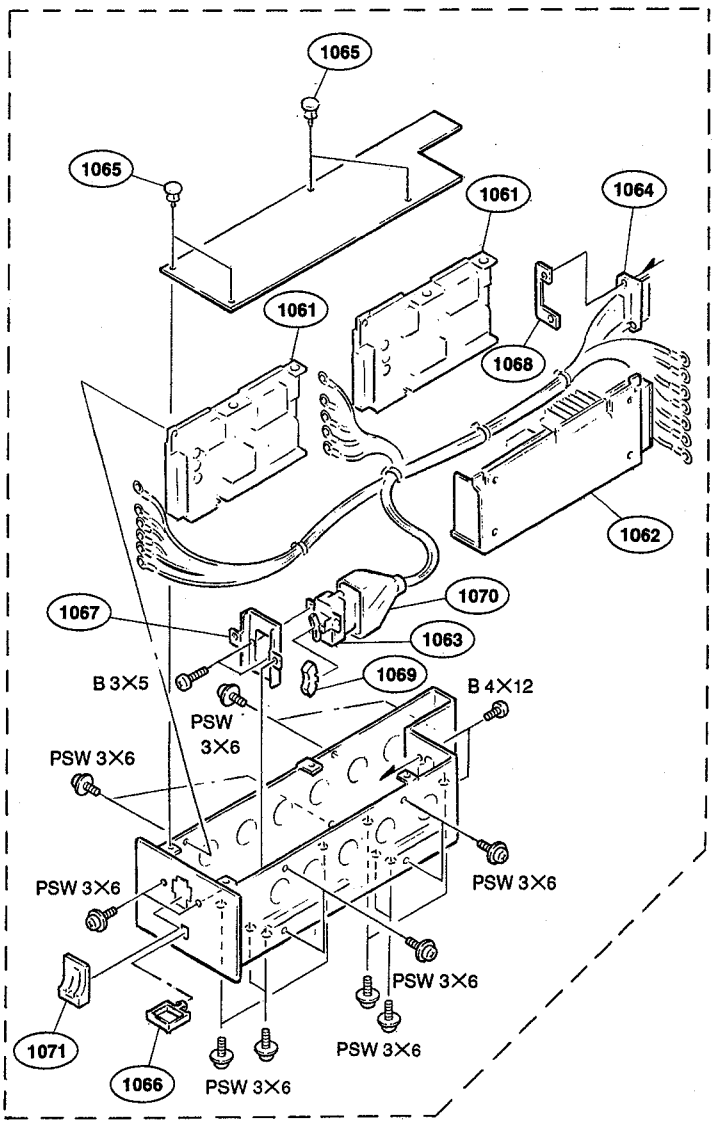

MAIN BLOCK DMX-B4016 PROCESSOR
DMBK-4008 (OPTION), DMBK-4010 (OPTION), DMBK-4011 (OPTION)

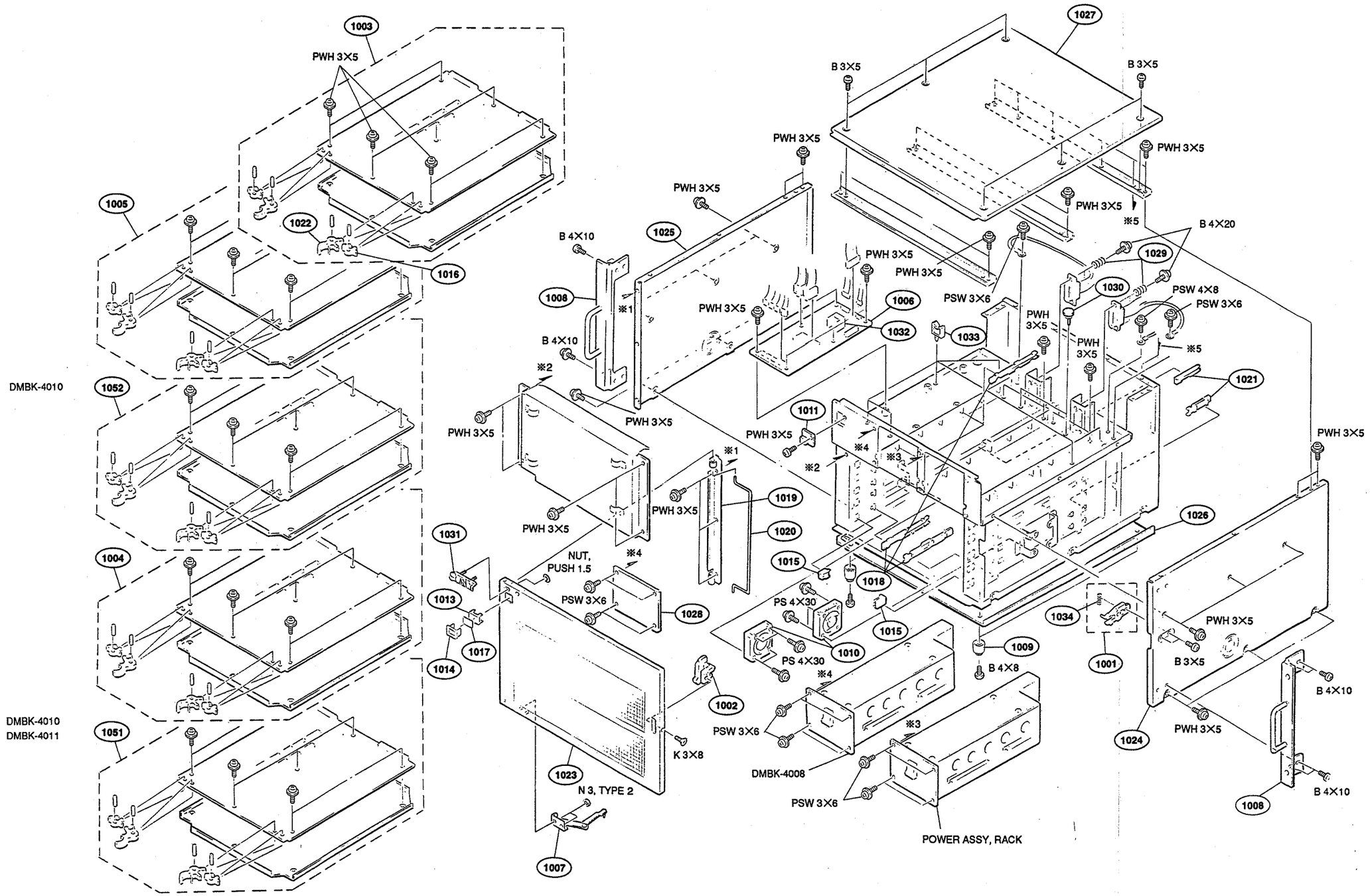

6-17

CONNECTOR PANEL BLOCK
DMX-B4016 PROCESSOR

(2) CONNECTOR PANEL BLOCK

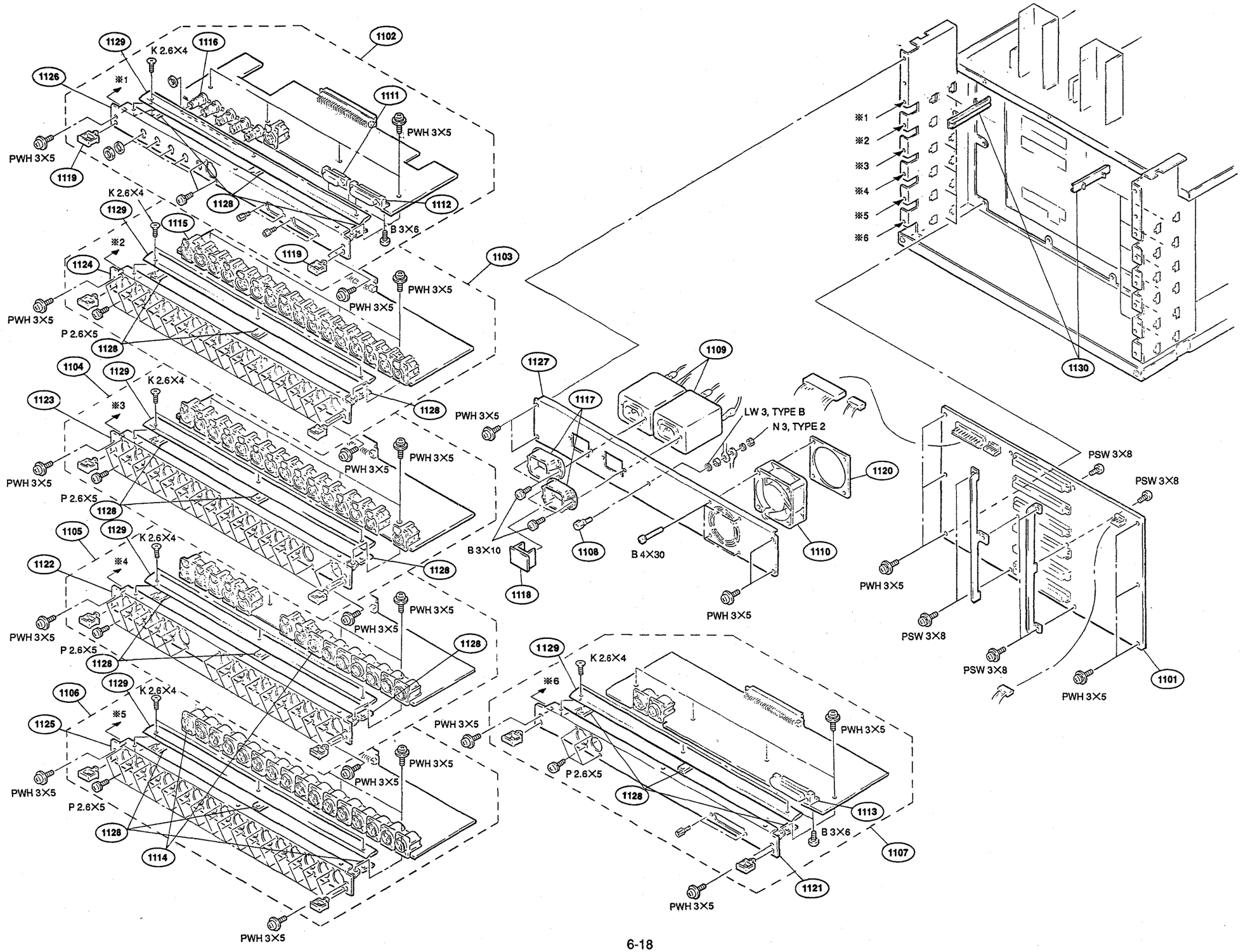

6-18

No.	Part No.	SP	Description
1101	A-8274-619-A	o	MOUNTED CIRCUIT BOARD, MB-480
1102	A-8275-634-A	o	MOUNTED CIRCUIT BOARD, CN-827
1103	A-8275-635-A	o	MOUNTED CIRCUIT BOARD, CN-828A
1104	A-8275-637-A	o	MOUNTED CIRCUIT BOARD, CN-828B
1105	A-8275-638-A	o	MOUNTED CIRCUIT BOARD, CN-830
1106	A-8275-639-A	o	MOUNTED CIRCUIT BOARD, CN-831
1107	A-8275-640-A	o	MOUNTED CIRCUIT BOARD, CN-832A (FOR UC/EK)
	A-8275-642-A	o	MOUNTED CIRCUIT BOARD, CN-832B (FOR J)
1108	X-4801-204-0	o	TERMINAL ASSY
1109	⚠1-424-451-11	s	FILTER, NOISE (GL-2060M)
1110	1-541-891-11	s	MOTOR, DC FAN (WITH FG)
1111	1-563-771-11	s	SOCKET, D-SUB CONNECTOR 15P
1112	1-563-772-11	o	SOCKET, D-SUB CONNECTOR 25P
1113	1-563-773-11	s	SOCKET, D-SUB CONNECTOR 37P
1114	1-568-005-11	s	CONNECTOR, XLR TYPE 3P
1115	1-568-006-11	s	CONNECTOR, XLR TYPE 3P
1116	1-764-273-11	s	CONNECTOR, BNC
1117	2-990-241-02	s	HOLDER (A), PLUG
1118	3-171-957-01	s	CAP, PLUG HOLDER
1119	3-172-089-01	o	HANDLE
1120	3-177-016-01	o	NUT (F), PLATE
1121	3-184-313-02	o	PANEL, CN-832
1122	3-184-314-02	o	PANEL, CN-830
1123	3-184-315-02	o	PANEL, CN-828 (B)
1124	3-184-316-02	o	PANEL, CN-828A
1125	3-184-316-12	o	PANEL, CN-831
1126	3-184-317-02	o	PANEL, CN-827
1127	3-184-321-01	o	PANEL, REAR
1128	3-184-772-01	o	NUT, PLATE
1129	3-184-856-01	o	CN, PLATE, SHIELD
1130	3-680-613-01	o	SUPPORT, PC BOARD

6-19

OPTIONAL ACCESSORIES

DMBK-4001 (OPTION)

No.	Part No.	SP	Description
1201	A-8275-627-A	o	MOUNTED CIRCUIT BOARD, CPU-146
1202	A-8275-628-A	o	MOUNTED CIRCUIT BOARD, KY-302
1203	A-8276-860-A	o	MOUNTED CIRCUIT BOARD, CN-842
1204	X-3678-032-1	s	DIAL,ASSY
1205	1-466-955-11	s	ENCODER, ROTARY
1206	3-179-110-01	s	COVER, DIAL
1207	3-184-303-01	o	STANDOFF, PCB 21.9
1208	3-184-304-01	o	STANDOFF, PCB 16.3
1209	3-184-306-01	o	LENS, CONTROL
1210	3-184-309-01	o	TOP PANEL, REMOTE CONTROLLER
1211	3-708-603-11	o	KEY TOP (1) (0)
1212	3-708-603-21	o	KEY TOP (1) (1)
1213	3-708-603-31	o	KEY TOP (1) (2)
1214	3-708-603-41	o	KEY TOP (1) (3)
1215	3-708-603-51	o	KEY TOP (1) (4)
1216	3-708-603-61	o	KEY TOP (1) (5)
1217	3-708-603-71	o	KEY TOP (1) (6)
1218	3-708-603-81	o	KEY TOP (1) (7)
1219	3-708-603-91	o	KEY TOP (1) (8)
1220	3-708-604-01	o	KEY TOP (1) (9)
1221	3-708-783-11	o	KEY TOP (1) (CLR)
1222	3-708-848-01	s	KEY TOP (LED) (F1)
1223	3-708-848-11	s	KEY TOP (LED) (F2)
1224	3-708-848-21	s	KEY TOP (LED) (F3)
1225	3-708-848-31	s	KEY TOP (LED) (F4)
1226	3-708-848-41	s	KEY TOP (LED) (PGM TRK)
1227	3-708-848-51	s	KEY TOP (LED) (INDEX)
1228	3-708-848-61	s	KEY TOP (LED) (TC)
1229	3-708-848-71	s	KEY TOP (LED) (MCN1)
1230	3-708-848-81	s	KEY TOP (LED) (MCN2)
1231	3-708-849-01	s	KEY TOP (LED) (MCN4)
1232	3-708-849-11	s	KEY TOP (LED) (MCN5)
1233	3-708-849-21	s	KEY TOP (LED) (MCN6)
1234	3-708-849-31	s	KEY TOP (LED) (REW)
1235	3-708-849-41	s	KEY TOP (LED) (FF)
1236	3-708-849-51	s	KEY TOP (LED) (PLAY)
1237	3-708-849-61	s	KEY TOP (LED) (STOP)
1238	3-708-849-71	s	KEY TOP (LED) (REC)
1239	3-708-849-81	s	KEY TOP (LED) (JOG)
1240	3-708-850-01	s	KEY TOP (LED) (ON LINE)
1241	3-708-850-11	s	KEY TOP (LED) (LCATE)
1242	3-708-850-21	s	KEY TOP (LED) (MONI PLAY)
1243	3-708-850-31	s	KEY TOP (▶▶)
1244	3-708-850-41	s	KEY TOP (◀◀)
1245	3-708-851-01	s	KEY TOP (LED) (MCN3)
1246	3-708-851-11	s	KEY TOP (LED) (SHTL)
1247	3-708-851-21	s	KEY TOP (MARK)
1248	3-717-380-01	o	GUARD, REC

KEY TOP (1211 to 1247)

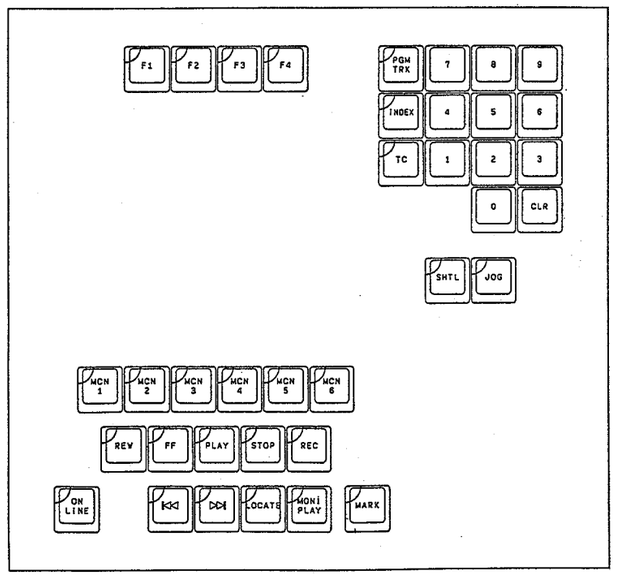

CONTROL PANEL ASSY

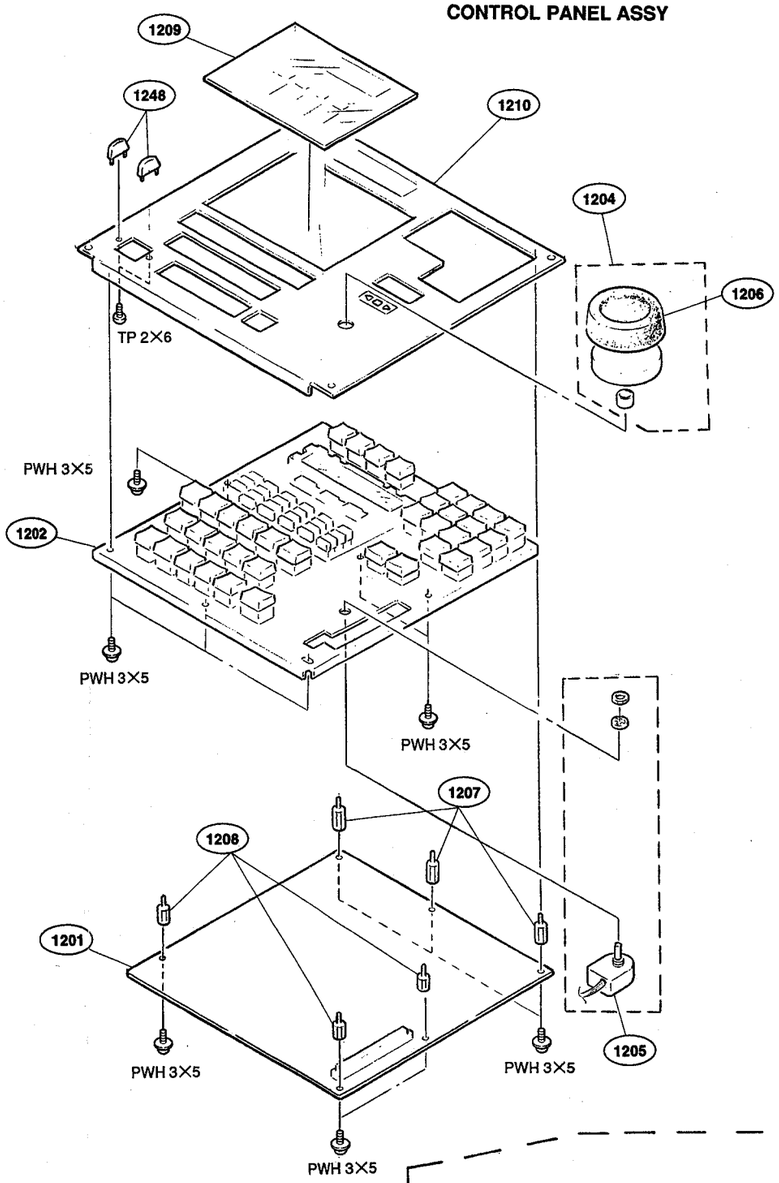

CN-842 MOUNT

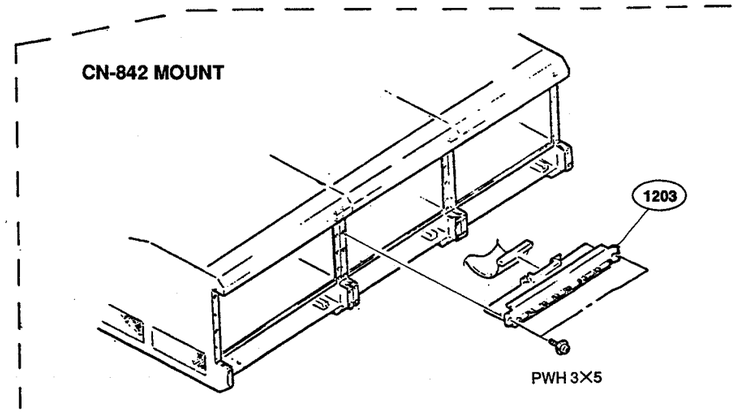

DMBK-4002 (OPTION)

No.	Part No.	SP	Description
1301	3-183-528-02	o	LEVEL ADJUSTORL
1302	3-183-529-02	o	PLATE, BLIND

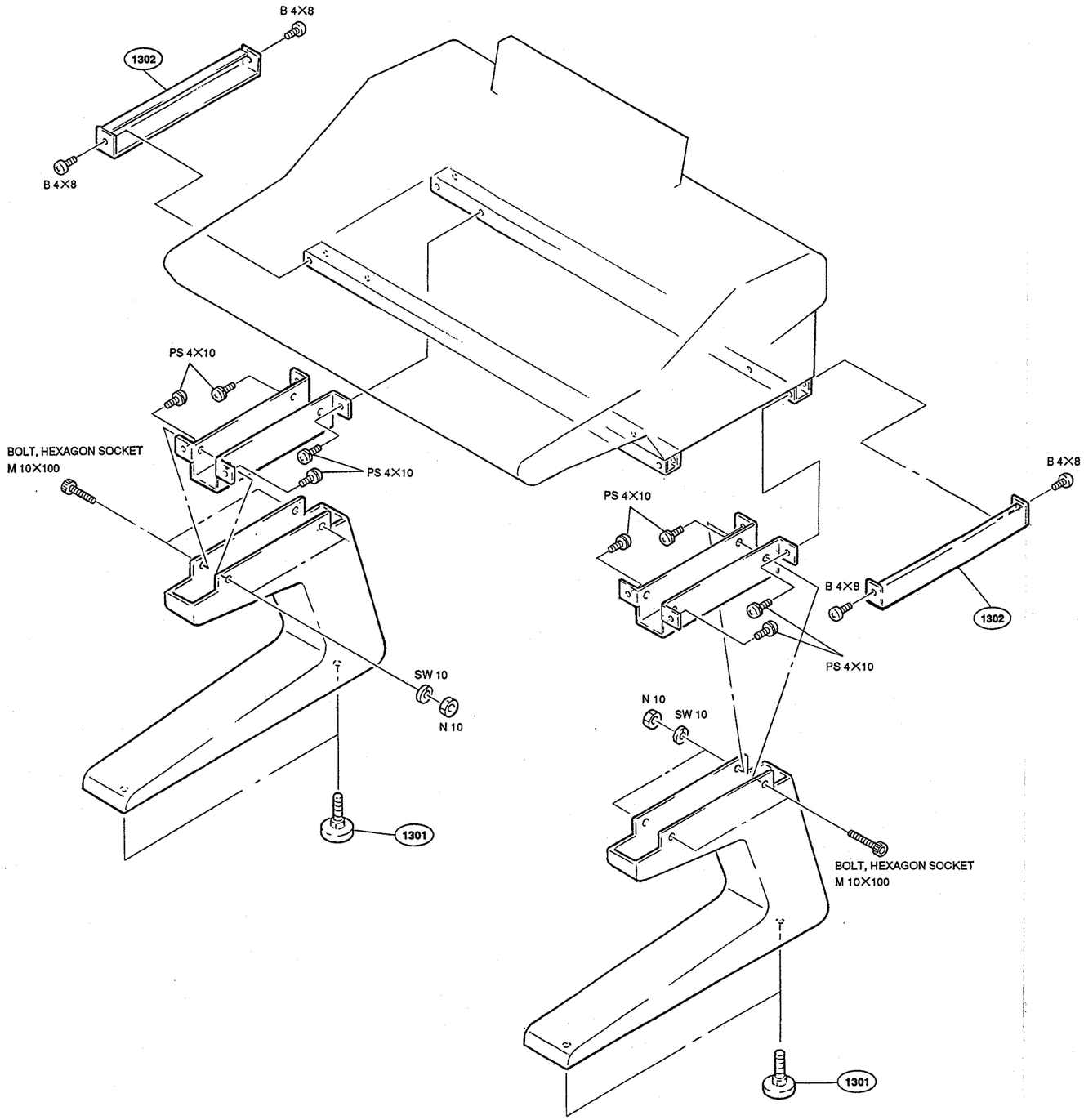

6-21

DMBK-4004 (OPTION)

No.	Part No.	SP	Description
1401	3-182-970-02	o	COVER (CH), BOTTOM FRONT
1402	3-182-972-02	o	RAIL (L), CH
1403	3-182-973-02	o	RAIL (M), CH
1404	3-182-974-01	o	ORNAMENTAL FRONT PLATE (CH)
1405	3-183-014-03	o	PANEL (CH), PW/BLANK
1406	3-183-015-03	o	PANEL, HA BLIND
1407	3-183-017-01	o	PANEL, CN BLIND
1408	3-183-042-03	o	COVER (CH), TOP
1409	3-183-535-02	o	BLANK (CH)
1410	3-183-536-02	o	BLANK (FED)
1411	3-183-537-01	o	BLANK, REAR PANEL
1412	3-673-676-21	o	RAIL, PC BOARD GUIDE
1413	3-183-021-01	o	PANEL (CH), BOTTOM
1414	X-3167-357-1	o	PAD (CH) ASSY

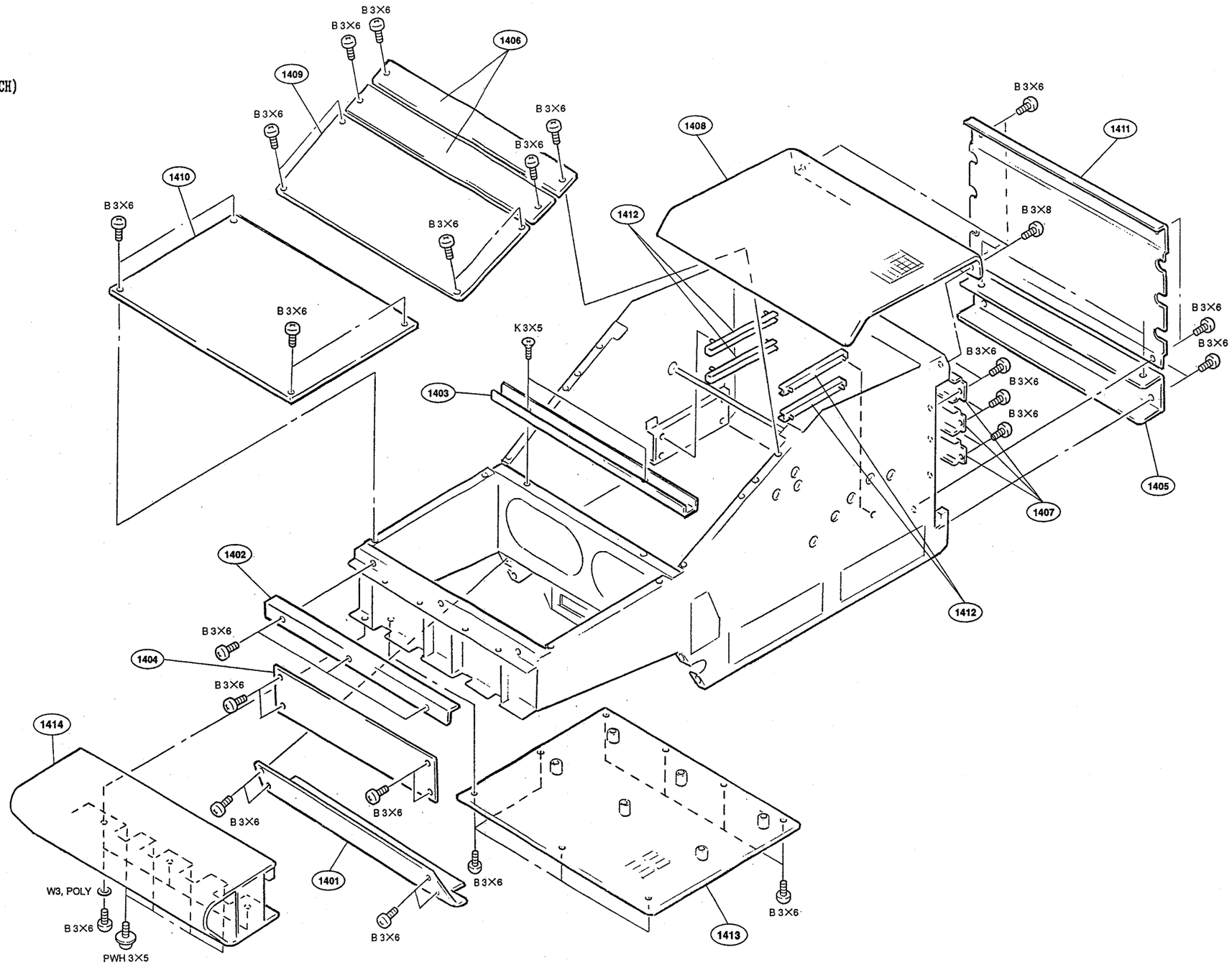

6-22

DMBK-4007 (OPTION)

No.	Part No.	SP	Description
1501	X-2127-214-3	o	ANGLE (1U) ASSY, RACK
1502	X-3556-910-0	s	FOOT ASSY, MF
1503	X-4801-204-0	o	TERMINAL ASSY
1504	⚠1-413-955-11	s	SWITCHING REG.(MRW-171)
1505	1-424-451-11	s	FILTER, NOISE (GL-2060M)
1506	⚠1-570-384-11	s	SWITCH, SEESAW (AC POWER)
1507	1-636-210-11	o	PRINTED CIRCUIT BOARD, DP-131
1508	2-139-192-01	s	FRAME, INDICATOR WINDOW
1509	2-139-193-02	s	WINDOW, INDICATOR
1510	2-249-353-00	s	COVER, LAMP
1511	2-990-241-02	s	HOLDER (A), PLUG
1512	3-166-049-01	o	REINFORCEMENT, F
1513	3-184-985-01	o	CHASSIS (D150)
1514	3-184-986-01	o	PLATE TOP (D150)
1515	3-182-941-03	o	PANEL, REAR
1516	3-182-942-01	o	PANEL, FRONT
1517	3-688-814-11	s	CAP, SWITCH
1518	3-718-322-02	o	EMBLEM, SONY
1519	4-378-341-01	o	COVER, SWITCH
1520	4-604-107-11	o	GUARD, POWER SW

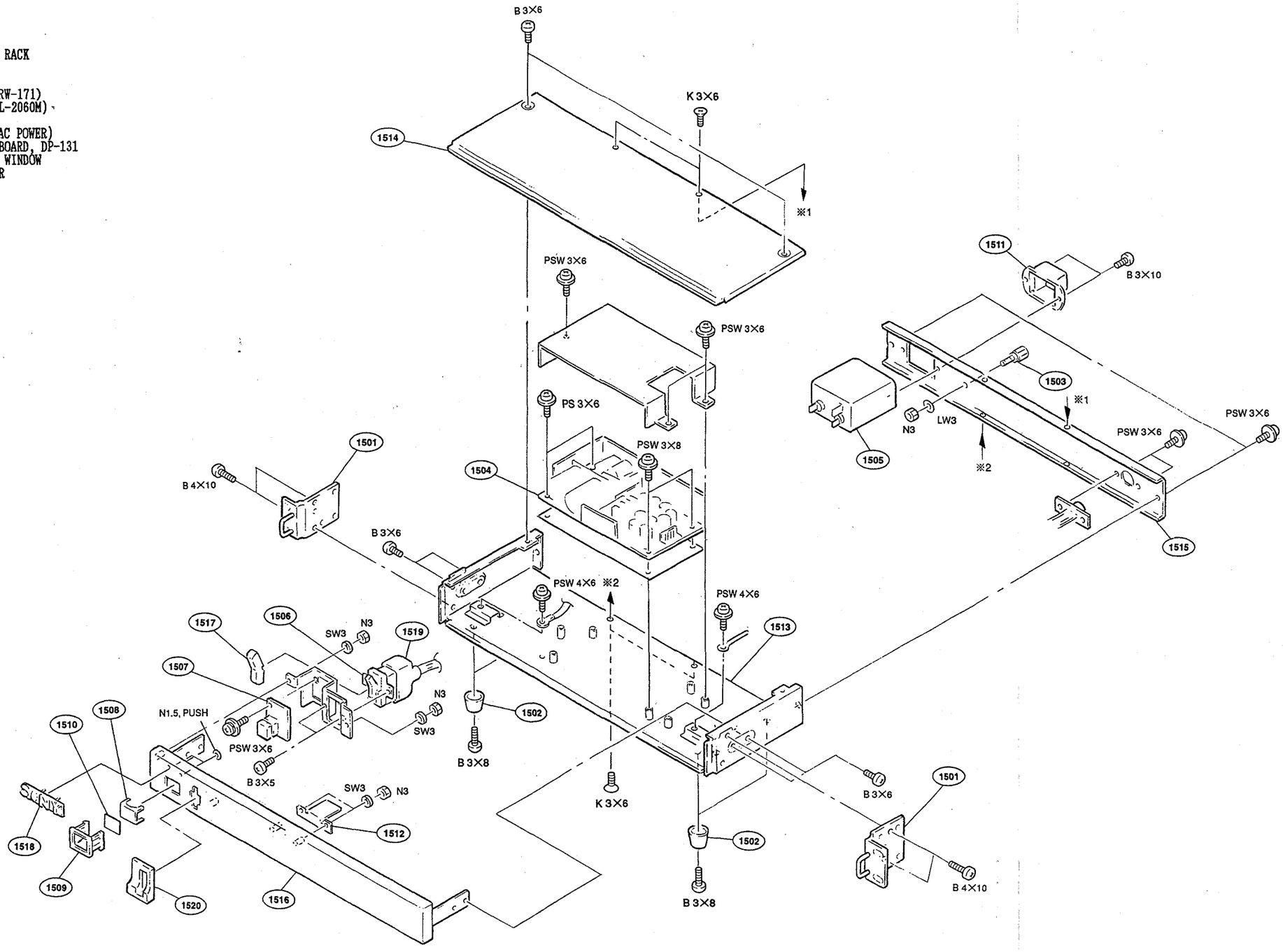

6-23

DMBK-4010 (OPTION)

No.	Part No.	SP	Description
1701	3-182-970-02	o	COVER (CH), BOTTOM FRONT
1702	3-182-972-02	o	RAIL (L), CH
1703	3-182-973-02	o	RAIL (M), CH
1704	3-182-974-01	o	ORNAMENTAL FRONT PLATE (CH)
1705	3-183-014-03	o	PANEL (CH), PW/BLANK
1706	3-183-015-03	o	PANEL, HA BLIND
1707	3-183-017-01	o	PANEL, CN BLIND
1708	3-183-021-01	o	PANEL (CH), BOTTOM
1709	3-183-042-03	o	COVER (CH), TOP
1710	3-183-537-01	o	BLANK, REAR PANEL
1711	3-673-676-21	o	RAIL, PC BOARD GUIDE
1712	X-3167-357-1	o	PAD (CH) ASSY

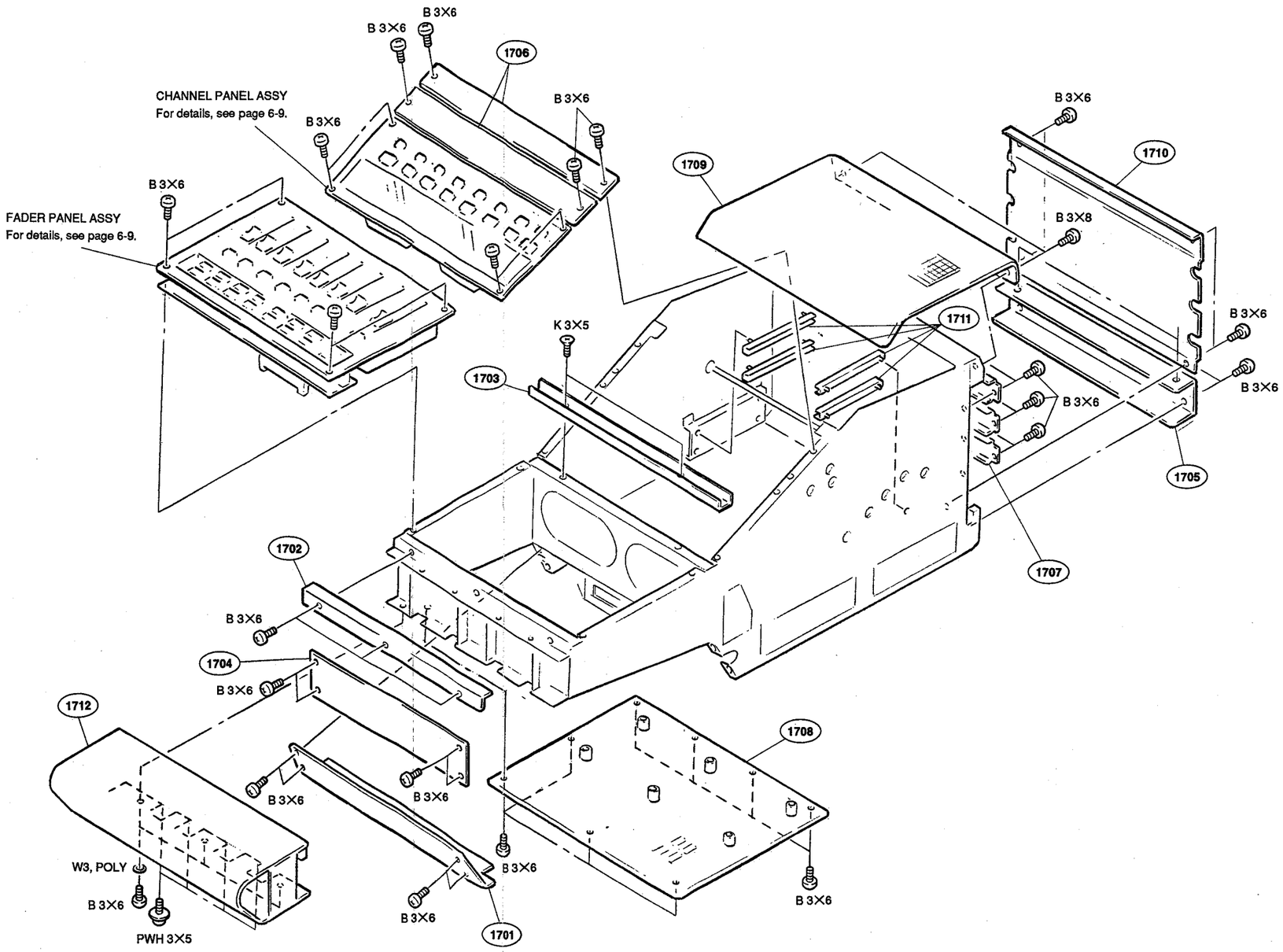

6-24

6-3. ELECTRICAL PARTS LIST

CAPACITOR, CERAMIC

Part No.	SP	Description
1-164-159-11	s	CAP, CERAMIC 0.1uF 50V

RESISTOR, METAL

Part No.	SP	Description
1-215-469-00	s	METAL 100K 1% 1/6W

RESISTOR, CARBON

Part No.	SP	Description
1-247-807-31	s	CARBON 100 5% 1/4W
1-249-401-11	s	CARBON 47 5% 1/4W
1-249-417-11	s	CARBON 1K 5% 1/4W

DMX-B4008/B4016 CONSOLE

CN-838 BOARD/CONSOLE

Ref. No. or Q'ty	Part No.	SP	Description
1pc	A-8276-796-A	o	MOUNTED CIRCUIT BOARD, CN-838
12pcs	7-682-547-04	s	SCREW +B 3X6
3pcs	7-682-903-01	s	SCREW +PWH 3X5
CN1	1-580-347-11	s	CONNECTOR, BNC, FEMALE
CN2	1-566-319-11	o	CONNECTOR, D-SUB 15P, MALE
CN3	1-563-770-11	s	CONNECTOR, D-SUB 9P, FEMALE
CN4	1-563-770-11	s	CONNECTOR, D-SUB 9P, FEMALE
CN5	1-563-771-11	s	CONNECTOR, D-SUB 15P, FEMALE
CN6	1-563-781-21	s	CONNECTOR, D-SUB 50P, FEMALE
CN7	1-563-781-21	s	CONNECTOR, D-SUB 50P, FEMALE
CN601	1-695-252-11	o	HEADER (RIGHT ANGLE TYPE) 26P
CN602	1-695-250-11	o	HEADER (RIGHT ANGLE TYPE) 16P
CN603	1-695-252-11	o	HEADER (RIGHT ANGLE TYPE) 26P
CN604	1-695-254-11	o	HEADER (RIGHT ANGLE TYPE) 50P
FL1 to FL81	1-236-163-11	s	ENCAPSULATED COMPONENT
R1	1-214-837-11	s	METAL 75 1% 1/2W
R2	1-214-837-11	s	METAL 75 1% 1/2W

CN-839 BOARD/CONSOLE

Ref. No. or Q'ty	Part No.	SP	Description
1pc	A-8276-797-A	o	MOUNTED CIRCUIT BOARD, CN-839
12pcs	7-682-547-04	s	SCREW +B 3X6
3pcs	7-682-903-01	s	SCREW +PWH 3X5
CN1	1-563-781-21	s	CONNECTOR, D-SUB 50P, FEMALE
CN2	1-563-781-21	s	CONNECTOR, D-SUB 50P, FEMALE
CN3	1-563-772-11	o	CONNECTOR, D-SUB 25P, FEMALE
CN4	1-563-770-11	s	CONNECTOR, D-SUB 9P, FEMALE
CN5	1-563-770-11	s	CONNECTOR, D-SUB 9P, FEMALE
CN6	1-563-771-11	s	CONNECTOR, D-SUB 15P, FEMALE
CN605	1-695-253-11	o	HEADER (RIGHT ANGLE TYPE) 40P
CN606	1-695-253-11	o	HEADER (RIGHT ANGLE TYPE) 40P
CN607	1-695-251-11	o	HEADER (RIGHT ANGLE TYPE) 20P
CN608	1-695-251-11	o	HEADER (RIGHT ANGLE TYPE) 20P
CN609	1-695-250-11	o	HEADER (RIGHT ANGLE TYPE) 16P
FL1 to FL103	1-236-163-11	s	ENCAPSULATED COMPONENT

CN-840 BOARD/CONSOLE

Ref. No. or Q'ty	Part No.	SP	Description
1pc	A-8276-798-A	o	MOUNTED CIRCUIT BOARD, CN-840A (FOR UC/EK)
1pc	A-8276-799-A	o	MOUNTED CIRCUIT BOARD, CN-840B (FOR J)
6pcs	7-682-547-04	s	SCREW +B 3X6
3pcs	7-682-903-01	s	SCREW +PWH 3X5
8pcs	7-621-259-35	s	SCREW +P 2.6X5
CN1	1-566-321-11	s	CONNECTOR, D-SUB 37P, MALE
CN2	1-563-773-11	s	CONNECTOR, D-SUB 37P, FEMALE
CN3	1-568-005-11	s	CONNECTOR, XLR 3P, MALE (FOR J)
CN3	1-568-006-11	s	CONNECTOR, XLR 3P, FEMALE (FOR UC/EK)
CN4	1-568-005-11	s	CONNECTOR, XLR 3P, MALE (FOR J)
CN4	1-568-006-11	s	CONNECTOR, XLR 3P, FEMALE (FOR UC/EK)
CN5	1-568-005-11	s	CONNECTOR, XLR 3P, MALE (FOR J)
CN5	1-568-006-11	s	CONNECTOR, XLR 3P, FEMALE (FOR UC/EK)
CN6	1-568-005-11	s	CONNECTOR, XLR 3P, MALE (FOR J)
CN6	1-568-006-11	s	CONNECTOR, XLR 3P, FEMALE (FOR UC/EK)
CN7	1-563-770-11	s	CONNECTOR, D-SUB 9P, FEMALE
CN610	1-560-781-00	o	HEADER 34P
CN611	1-695-253-11	o	HEADER (RIGHT ANGLE TYPE) 40P
CN612	1-695-252-11	o	HEADER (RIGHT ANGLE TYPE) 26P
FL1 to FL37	1-236-163-11	s	ENCAPSULATED COMPONENT
FL38	1-236-163-11	s	ENCAPSULATED COMPONENT (FOR J)
FL39	1-236-163-11	s	ENCAPSULATED COMPONENT (FOR UC/EK)
FL40	1-236-163-11	s	ENCAPSULATED COMPONENT
FL41	1-236-163-11	s	ENCAPSULATED COMPONENT (FOR J)
FL42	1-236-163-11	s	ENCAPSULATED COMPONENT (FOR UC/EK)
FL43	1-236-163-11	s	ENCAPSULATED COMPONENT
FL44	1-236-163-11	s	ENCAPSULATED COMPONENT (FOR J)
FL45	1-236-163-11	s	ENCAPSULATED COMPONENT (FOR UC/EK)
FL46	1-236-163-11	s	ENCAPSULATED COMPONENT
FL47	1-236-163-11	s	ENCAPSULATED COMPONENT (FOR J)
FL48	1-236-163-11	s	ENCAPSULATED COMPONENT (FOR UC/EK)
FL49 to FL52	1-236-163-11	s	ENCAPSULATED COMPONENT
JW1	1-535-303-00	o	WIRE, JUMPER (FOR UC/EK)
JW2	1-535-303-00	o	WIRE, JUMPER (FOR J)
JW3	1-535-303-00	o	WIRE, JUMPER (FOR UC/EK)
JW4	1-535-303-00	o	WIRE, JUMPER (FOR J)
JW5	1-535-303-00	o	WIRE, JUMPER (FOR UC/EK)
JW6	1-535-303-00	o	WIRE, JUMPER (FOR J)
JW7	1-535-303-00	o	WIRE, JUMPER (FOR UC/EK)
JW8	1-535-303-00	o	WIRE, JUMPER (FOR J)

NOTE 1:Please see page 6-25 for the parts that are not listd in the parts list.

NOTE 2:For the # marked in the following parts list, refer to section 7, Changed Parts.

CN-841 BOARD/CONSOLE

Ref. No. or Q'ty	Part No.	SP	Description
1pc	1-649-753-11	o	PRINTED CIRCUIT BOARD, CN-841
CN621	1-564-013-21	s	PIN, CONNECTOR 3P
FL1	1-236-163-11	s	ENCAPSULATED COMPONENT
FL2	1-236-163-11	s	ENCAPSULATED COMPONENT
JK1	1-565-327-11	s	JACK, LARGE TYPE 1P

CPU-145 BOARD/CONSOLE

Ref. No. or Q'ty	Part No.	SP	Description
1pc	A-8275-415-A	o	MOUNTED CIRCUIT BOARD, CPU-145 (FOR DMX-B4008)
1pc	A-8275-630-A	o	MOUNTED CIRCUIT BOARD, CPU-145A (FOR DMX-B4016)
C101 to C108	1-163-235-11	s	CERAMIC, CHIP 22PF 5% 50V
C109	1-126-163-11	s	ELECT 4.7uF 20% 50V
C110	1-126-163-11	s	ELECT 4.7uF 20% 50V
C111	1-126-163-11	s	ELECT 4.7uF 20% 50V
C112	1-126-163-11	s	ELECT 4.7uF 20% 50V
C113	1-163-038-00	s	CERAMIC, CHIP 0.1uF 25V
C114	1-124-261-00	s	ELECT 10uF 20% 50V
C115	1-126-160-11	s	ELECT 1uF 20% 50V
C116 to C134	1-163-038-00	s	CERAMIC, CHIP 0.1uF 25V
C201 to C212	1-163-038-00	s	CERAMIC, CHIP 0.1uF 25V
C213	1-125-447-11	s	DOUBLE LAYERS 1FARAD 5.5V
C214	1-125-447-11	s	DOUBLE LAYERS 1FARAD 5.5V
C215	1-163-038-00	s	CERAMIC, CHIP 0.1uF 25V
C301 to C315	1-163-038-00	s	CERAMIC, CHIP 0.1uF 25V
C401 to C410	1-163-038-00	s	CERAMIC, CHIP 0.1uF 25V
C501	1-124-261-00	s	ELECT 10uF 20% 50V
C502	1-163-239-11	s	CERAMIC, CHIP 33PF 5% 50V
C503	1-163-239-11	s	CERAMIC, CHIP 33PF 5% 50V
C504	1-163-239-11	s	CERAMIC, CHIP 33PF 5% 50V
C505 to C512	1-163-235-11	s	CERAMIC, CHIP 22PF 5% 50V
C513 to C525	1-163-038-00	s	CERAMIC, CHIP 0.1uF 25V
C601 to C615	1-163-038-00	s	CERAMIC, CHIP 0.1uF 25V
C701 to C708	1-163-038-00	s	CERAMIC, CHIP 0.1uF 25V
C801	1-128-126-11	s	ELECT 100uF 20% 25V
C802	1-128-126-11	s	ELECT 100uF 20% 25V
C803	1-128-126-11	s	ELECT 100uF 20% 25V
C804	1-163-038-00	s	CERAMIC, CHIP 0.1uF 25V
CN1	1-563-890-21	s	CONNECTOR, D-SUB 9P, FEMALE
CN2	1-563-890-21	s	CONNECTOR, D-SUB 9P, FEMALE
CN3	1-564-411-11	o	PIN, CONNECTOR 50P
CN200	1-564-241-00	o	CONNECTOR, 4P, MALE
CN201	1-695-249-11	o	HEADER (STRAIGHT) 50P
CN202	1-506-555-11	o	HEADER 40P
CN203	1-695-249-11	o	HEADER (STRAIGHT) 50P
CN204	1-695-248-11	o	HEADER (STRAIGHT) 26P
CN205	1-695-246-11	o	HEADER (STRAIGHT) 16P
CN206	1-560-806-00	o	HEADER 34P
CN207	1-564-011-11	o	CONNECTOR 12P, MALE
CN208	1-564-011-11	o	CONNECTOR 12P, MALE
CNI114	1-526-816-21	s	SOCKET, IC (DP) 24P

NOTE 1:Please see page 6-25 for the parts that are not listd in the parts list.

NOTE 2:For the # marked in the following parts list, refer to section 7, Changed Parts.

(CPU-145 BOARD/CONSOLE)

Ref. No. or Q'ty	Part No.	SP	Description
CNI115	1-526-816-21	s	SOCKET, IC (DP) 24P
CNI116	1-526-816-21	s	SOCKET, IC (DP) 24P
CNI117	1-526-816-21	s	SOCKET, IC (DP) 24P
CNI118	1-526-656-00	s	SOCKET, IC (DP) 20P
CNI201	1-526-662-21	o	SOCKET, IC (DP) 40P
CNI202	1-526-662-21	o	SOCKET, IC (DP) 40P
CNI204	1-526-659-00	o	SOCKET, IC 28P
CNI502	1-526-659-00	o	SOCKET, IC 28P
CNI611	1-526-816-21	s	SOCKET, IC (DP) 24P
COP102	1-563-859-11	s	PLUG, SHORTING
COP201	1-563-859-11	s	PLUG, SHORTING
COP202	1-563-859-11	s	PLUG, SHORTING
COP501	1-563-859-11	s	PLUG, SHORTING
CP101	8-719-980-37	s	DIODE DAN803
CP102	8-719-980-36	s	DIODE DAP803
D101	8-719-911-19	s	DIODE 1SS119
D102	8-719-812-31	s	LED TLR123, RED
D103	8-719-812-31	s	LED TLR123, RED
D104 to D111	8-719-812-43	s	LED TLG124A, GRN
D201	8-719-987-87	s	DIODE ERA85-009
D501	8-719-911-19	s	DIODE 1SS119
D502	8-719-911-19	s	DIODE 1SS119
D503	8-719-911-19	s	DIODE 1SS119
D504	8-719-812-43	s	LED TLG124A, GRN
D505	8-719-812-43	s	LED TLG124A, GRN
D506	8-719-812-43	s	LED TLG124A, GRN
D507	8-719-812-43	s	LED TLG124A, GRN
D601 to D608	8-719-812-43	s	LED TLG124A, GRN
D701 to D705	8-719-812-43	s	LED TLG124A, GRN
IC101	8-759-194-86	s	IC MC68302FC16C
IC102	8-759-061-67	s	IC MC34051M
IC103	8-759-972-58	s	IC MAX238CNG
IC104	8-759-989-91	s	IC TL7705ACPS
IC105	8-759-239-92	s	IC TC74HC07AF
IC106	8-759-925-76	s	IC SN74HC08NS
IC107	8-759-926-07	s	IC SN74HC132NS
IC108	8-759-925-80	s	IC SN74HC14NS
IC109	8-759-244-12	s	IC TC74AC175F
IC110	8-759-926-23	s	IC SN74HC163NS
IC111	8-759-926-23	s	IC SN74HC163NS
IC112	8-759-989-03	s	IC 74F32SJ
IC113	8-759-948-01	s	IC 74F04SJ
IC114	8-759-247-80	o	IC 22V10B-145#114V1.00
IC115	8-759-247-75	o	IC 22V10B-IOPDEC-V1.0
IC116	8-759-247-76	o	IC 22V10B-PSEL-V1.0
IC117	8-759-247-77	o	IC 22V10B-IOSEL-V1.0
IC118	8-759-247-78	o	IC 16V8B-IORW-V1.0
IC119	8-759-926-54	s	IC SN74HC259ANS
IC201	8-759-274-95	o	IC 27C4002-PNLHOST-V1.00 (FOR DMX-B4008)
	8-759-262-07	o	IC 27C4002-16HOST-V1.00 (FOR DMX-B4016)
IC204	8-759-097-08	s	IC DS1643-150
IC205 to IC212	8-752-365-27	s	IC CXK581000AM-70LL-TL

NOTE 1:Please see page 6-25 for the parts that are not listd in the parts list.

(CPU-145 BOARD/CONSOLE)

Ref. No. or Q'ty	Part No.	SP	Description
IC213	8-759-510-18	s	IC ICL7665ACSA
IC301	8-759-992-69	s	IC 74F245SJ
IC302	8-759-992-69	s	IC 74F245SJ
IC303	8-759-993-54	s	IC 74F541SJ
IC304	8-759-993-54	s	IC 74F541SJ
IC305	8-759-993-54	s	IC 74F541SJ
IC306	8-759-993-54	s	IC 74F541SJ
IC307	8-759-033-09	s	IC MC74F21M
IC308	8-759-926-77	s	IC SN74HC541NS
IC309	8-759-926-77	s	IC SN74HC541NS
IC310	8-759-926-49	s	IC SN74HC245NS
IC311	8-759-926-49	s	IC SN74HC245NS
IC312	8-759-926-77	s	IC SN74HC541NS
IC313	8-759-926-77	s	IC SN74HC541NS
IC314	8-759-926-49	s	IC SN74HC245NS
IC315	8-759-926-77	s	IC SN74HC541NS
IC401	8-759-510-88	s	IC MB8431-90LPFQ
IC402	8-759-973-43	s	IC MB8421-90LPFQ
IC403	8-759-510-88	s	IC MB8431-90LPFQ
IC404	8-759-973-43	s	IC MB8421-90LPFQ
IC405	8-759-926-62	s	IC SN74HC365ANS
IC406	8-759-926-49	s	IC SN74HC245NS
IC407	8-759-926-49	s	IC SN74HC245NS
IC408	8-759-926-77	s	IC SN74HC541NS
IC409	8-759-926-77	s	IC SN74HC541NS
IC410	8-759-926-77	s	IC SN74HC541NS
IC501	8-759-973-43	s	IC MB8421-90LPFQ
IC502	8-759-274-96	o	IC 27C256B-9PIN-V1.00
IC503	8-759-151-04	s	IC UPD43256AGU-10LL
IC504	8-759-925-85	s	IC SN74HC32NS
IC505	8-759-925-74	s	IC TC74HC04NS
IC506	8-759-926-07	s	IC SN74HC132NS
IC507	8-759-246-66	s	IC TMPZ84C015BF-6
IC508	8-759-926-23	s	IC SN74HC163NS
IC509	8-759-923-64	s	IC AM26LS32ACNS
IC510	8-759-926-30	s	IC AM26LS30PC
IC511	8-759-926-30	s	IC AM26LS30PC
IC512	8-759-998-40	s	IC SN75124NS
IC513	8-759-926-62	s	IC SN74HC365ANS
IC601	8-759-926-11	s	IC SN74HC138NS
IC602	8-759-926-11	s	IC SN74HC138NS
IC603	8-759-926-76	s	IC SN74HC540NS
IC604	8-759-926-76	s	IC SN74HC540NS
IC605	8-759-926-62	s	IC SN74HC365ANS
IC606	8-759-926-76	s	IC SN74HC540NS
IC607	8-759-926-69	s	IC SN74HC377ANS
IC608	8-759-926-69	s	IC SN74HC377ANS
IC609	8-759-926-69	s	IC SN74HC377ANS
IC610	8-759-925-90	s	IC SN74HC74NS
IC611	8-759-247-81	o	IC 22V10B-145#611V1.00
IC612	8-759-994-41	s	IC CXD8025Q
IC613	8-759-994-41	s	IC CXD8025Q
IC614	8-759-923-65	s	IC AM26LS31CNS
IC615	8-759-097-52	s	IC SN75123NS
IC701	8-759-926-11	s	IC SN74HC138NS
IC702	8-759-926-69	s	IC SN74HC377ANS
IC703	8-759-926-62	s	IC SN74HC365ANS
IC704	8-759-321-82	s	IC HD63265FP
IC705	8-759-992-25	s	IC 74F139SJ

NOTE 2:For the # marked in the following parts list, refer to section 7, Changed Parts.

(CPU-145 BOARD/CONSOLE)

Ref. No. or Q'ty	Part No.	SP	Description
IC706	8-759-501-10	s	IC SN74LS540NS
IC707	8-759-501-10	s	IC SN74LS540NS
IC708	8-759-239-92	s	IC TC74HC07AF
JW101	1-566-388-11	s	CONNECTOR 8P, MALE
JW102	1-566-388-11	s	CONNECTOR 8P, MALE
JW103	1-566-388-11	s	CONNECTOR 8P, MALE
JW201	1-566-388-11	s	CONNECTOR 8P, MALE
JW202	1-566-388-11	s	CONNECTOR 8P, MALE
JW501	1-566-388-11	s	CONNECTOR 8P, MALE
R103	1-216-001-00	s	METAL, CHIP 10 5% 1/10W
R104	1-216-001-00	s	METAL, CHIP 10 5% 1/10W
R109	1-216-001-00	s	METAL, CHIP 10 5% 1/10W
R110	1-216-001-00	s	METAL, CHIP 10 5% 1/10W
R111	1-216-089-91	s	RES, CHIP 47K 5% 1/10W
R112	1-216-089-91	s	RES, CHIP 47K 5% 1/10W
R113	1-216-089-91	s	RES, CHIP 47K 5% 1/10W
R114	1-216-089-91	s	RES, CHIP 47K 5% 1/10W
R204	1-215-451-00	s	METAL 18K 1% 1/6W
R205	1-215-445-00	s	METAL 10K 1% 1/6W
R206	1-247-883-00	s	CARBON 150K 5% 1/4W
R207	1-249-393-11	s	CARBON 10 5% 1/4W
R208	1-249-441-11	s	CARBON 100K 5% 1/4W
R503	1-215-389-00	s	METAL 47 1% 1/6W
R507	1-249-409-11	s	CARBON 220 5% 1/4W
R510	1-249-409-11	s	CARBON 220 5% 1/4W
#RB101	1-235-194-11	s	RESISTOR BLOCK 4.7KX8
RB102	1-235-337-11	s	RESISTOR BLOCK 22KX8
RB103	1-231-541-00	s	RESISTOR BLOCK 22Kx4
RB104	1-235-332-11	s	RESISTOR BLOCK 470X8
RB301 to RB310	1-235-337-11	s	RESISTOR BLOCK 22KX8
RB401	1-231-541-00	s	RESISTOR BLOCK 22Kx4
RB402	1-231-509-00	s	RESISTOR BLOCK 1Kx4
RB403 to RB407	1-235-337-11	s	RESISTOR BLOCK 22KX8
RB501	1-231-509-00	s	RESISTOR BLOCK 1Kx4
RB502	1-235-337-11	s	RESISTOR BLOCK 22KX8
RB503	1-231-541-00	s	RESISTOR BLOCK 22Kx4
RB504	1-235-337-11	s	RESISTOR BLOCK 22KX8
RB505	1-231-501-00	s	RESISTOR BLOCK 470x4
RB601	1-235-337-11	s	RESISTOR BLOCK 22KX8
RB602	1-235-337-11	s	RESISTOR BLOCK 22KX8
RB603	1-231-541-00	s	RESISTOR BLOCK 22Kx4
RB604	1-235-337-11	s	RESISTOR BLOCK 22KX8
RB605	1-235-332-11	s	RESISTOR BLOCK 470X8
RB606	1-235-337-11	s	RESISTOR BLOCK 22KX8
RB607	1-235-337-11	s	RESISTOR BLOCK 22KX8
RB701	1-235-337-11	s	RESISTOR BLOCK 22KX8
RB702	1-235-192-00	s	RESISTOR BLOCK 1KX8
RB703	1-235-332-11	s	RESISTOR BLOCK 470X8
S102	1-570-266-11	s	SWITCH, PUSH (1 KEY)
S501	1-554-937-11	s	SWITCH, PUSH
S502	1-570-623-11	s	SWITCH, DIP 8-CKT
S601	1-570-623-11	s	SWITCH, DIP 8-CKT
S602	1-570-623-11	s	SWITCH, DIP 8-CKT
SW101	1-554-937-11	s	SWITCH, PUSH

NOTE 1:Please see page 6-25 for the parts that are not listd in the parts list.

(CPU-145 BOARD/CONSOLE)

Ref. No. or Q'ty	Part No.	SP	Description
X101	1-577-258-11	s	CRYSTAL, 32MHz
X501	1-567-865-11	s	CRYSTAL, 12.00MHz

NOTE 2:For the # marked in the following parts list, refer to section 7, Changed Parts.

IF-413 BOARD/CONSOLE

Ref. No. or Q'ty	Part No.	SP	Description
1pc	A-8275-416-A	o	MOUNTED CIRCUIT BOARD, IF-413
6pcs	7-682-903-01	s	SCREW +PWH 3X5
C409	1-102-963-00	s	CERAMIC 33PF 5% 50V
C501	1-128-126-11	s	ELECT 100uF 20% 25V
C502	1-128-126-11	s	ELECT 100uF 20% 25V
C503	1-128-126-11	s	ELECT 100uF 20% 25V
C505	1-128-126-11	s	ELECT 100uF 20% 25V
CN400	1-564-241-00	o	CONNECTOR, 4P, MALE
CN401	1-506-555-11	o	HEADER 40P
CN402	1-695-246-11	o	HEADER (STRAIGHT) 16P
CN403	1-695-248-11	o	HEADER (STRAIGHT) 26P
CN404	1-695-249-11	o	HEADER (STRAIGHT) 50P
CN405	1-506-555-11	o	HEADER 40P
CN406	1-506-555-11	o	HEADER 40P
CN407	1-695-247-11	o	HEADER (STRAIGHT) 20P
CN408	1-695-246-11	o	HEADER (STRAIGHT) 16P
CN409 to CN413	1-695-965-11	o	HEADER (STRAIGHT) 10P
CP201	8-719-980-37	s	DIODE DAN803
CP202	8-719-980-36	s	DIODE DAP803
CP203	8-719-980-37	s	DIODE DAN803
CP204	8-719-980-36	s	DIODE DAP803
CP205	8-719-980-37	s	DIODE DAN803
CP206	8-719-980-36	s	DIODE DAP803
D401	8-719-911-19	s	DIODE 1SS119
D402	8-719-911-19	s	DIODE 1SS119
D403	8-719-911-19	s	DIODE 1SS119
D404	8-719-911-19	s	DIODE 1SS119
D501	8-719-200-02	s	DIODE 10E2
FB401	1-412-694-11	s	INDUCTOR, BEAD
FB402	1-412-694-11	s	INDUCTOR, BEAD
FB403	1-412-694-11	s	INDUCTOR, BEAD
FL201 to FL224	1-236-163-11	S	ENCAPSULATED COMPONENT
IC101	8-759-926-77	s	IC SN74HC541NS
IC102	8-759-926-49	s	IC SN74HC245NS
IC103	8-759-926-77	s	IC SN74HC541NS
IC104	8-759-926-11	s	IC SN74HC138NS
IC105	8-759-926-11	s	IC SN74HC138NS
IC201 to IC206	8-759-925-80	s	IC SN74HC14NS
IC207	8-759-996-51	s	IC CXD8125Q
IC208	8-759-106-58	s	IC UPD7004C
IC209	8-759-106-58	s	IC UPD7004C
IC210	8-759-106-58	s	IC UPD7004C
IC301 to IC306	8-759-925-80	s	IC SN74HC14NS
IC307	8-759-996-51	s	IC CXD8125Q
IC308	8-759-996-51	s	IC CXD8125Q
IC309	8-759-926-76	s	IC SN74HC540NS
IC310	8-759-051-53	s	IC TD62381F
IC311	8-759-926-76	s	IC SN74HC540NS
IC312	8-759-051-53	s	IC TD62381F
IC313	8-759-926-76	s	IC SN74HC540NS
IC314	8-759-051-53	s	IC TD62381F
IC315	8-759-926-76	s	IC SN74HC540NS
IC316	8-759-051-53	s	IC TD62381F

NOTE 1:Please see page 6-25 for the parts that are not listd in the parts list.

(IF-413 BOARD/CONSOLE)

Ref. No. or Q'ty	Part No.	SP	Description
IC317	8-759-926-62	s	IC SN74HC365ANS
IC318	8-759-051-53	s	IC TD62381F
IC401	8-759-996-51	s	IC CXD8125Q
IC402	8-759-925-80	s	IC SN74HC14NS
IC403	8-759-925-80	s	IC SN74HC14NS
IC404	8-759-926-76	s	IC SN74HC540NS
IC405	8-759-051-53	s	IC TD62381F
IC406	8-759-926-77	s	IC SN74HC541NS
IC407	8-759-926-77	s	IC SN74HC541NS
IC408	8-759-998-40	s	IC SN75124NS
IC409	8-759-926-62	s	IC SN74HC365ANS
IC410	8-759-926-62	s	IC SN74HC365ANS
IC411	8-759-925-80	s	IC SN74HC14NS
IC501	8-759-171-05	s	IC UPC7805H
R410	1-215-389-00	s	METAL 47 1% 1/6W
R411	1-249-425-11	s	CARBON 4.7K 5% 1/4W
R412	1-249-433-11	s	CARBON 22K 5% 1/4W
RB101 to RB104	1-235-337-11	s	RESISTOR BLOCK 22KX8
RB201 to RB204	1-235-337-11	s	RESISTOR BLOCK 22KX8
RB205	1-231-541-00	s	RESISTOR BLOCK 22Kx4
RB301	1-235-337-11	s	RESISTOR BLOCK 22KX8
RB302	1-235-337-11	s	RESISTOR BLOck 22kx8

NOTE 2:For the # marked in the following parts list, refer to section 7, Changed Parts.

IF-414 BOARD/CONSOLE

Ref. No. or Q'ty	Part No.	SP	Description
1pc	A-8275-414-A	o	MOUNTED CIRCUIT BOARD, IF-414 (FOR DMX-B4008)
1pc	A-8275-629-A	o	MOUNTED CIRCUIT BOARD, IF-414A (FOR DMX-B4016)
1pc	3-182-987-01	o	BRACKET, IF-414 SW
C108	1-126-163-11	s	ELECT 4.7uF 20% 50V
C109	1-126-163-11	s	ELECT 4.7uF 20% 50V
C110	1-126-163-11	s	ELECT 4.7uF 20% 50V
C111	1-126-163-11	s	ELECT 4.7uF 20% 50V
C112	1-163-038-00	s	CERAMIC, CHIP 0.1uF 25V
C113	1-126-157-11	s	ELECT 10uF 20% 16V
C114	1-163-038-00	s	CERAMIC, CHIP 0.1uF 25V
C116 to C133	1-163-038-00	s	CERAMIC, CHIP 0.1uF 25V
C201	1-125-447-11	s	DOUBLE LAYERS 1FARAD 5.5V
C202	1-125-447-11	s	DOUBLE LAYERS 1FARAD 5.5V
C203 to C215	1-163-038-00	s	CERAMIC, CHIP 0.1uF 25V
C301 to C319	1-163-038-00	s	CERAMIC, CHIP 0.1uF 25V
C320	1-164-083-11	s	CERAMIC 680PF 10% 50V
C401	1-163-038-00	s	CERAMIC, CHIP 0.1uF 25V
C403	1-163-038-00	s	CERAMIC, CHIP 0.1uF 25V
C404	1-163-038-00	s	CERAMIC, CHIP 0.1uF 25V
C405	1-163-038-00	s	CERAMIC, CHIP 0.1uF 25V
C406	1-163-038-00	s	CERAMIC, CHIP 0.1uF 25V
C407	1-126-157-11	s	ELECT 10uF 20% 16V
C408	1-126-157-11	s	ELECT 10uF 20% 16V
C409 to C414	1-163-038-00	s	CERAMIC, CHIP 0.1uF 25V
C499	1-163-038-00	s	CERAMIC, CHIP 0.1uF 25V
C501	1-163-038-00	s	CERAMIC, CHIP 0.1uF 25V
C502	1-163-038-00	s	CERAMIC, CHIP 0.1uF 25V
C503	1-163-038-00	s	CERAMIC, CHIP 0.1uF 25V
C504	1-126-160-11	s	ELECT 1uF 20% 50V
C505	1-163-038-00	s	CERAMIC, CHIP 0.1uF 25V
C506	1-163-038-00	s	CERAMIC, CHIP 0.1uF 25V
C507	1-163-038-00	s	CERAMIC, CHIP 0.1uF 25V
C508	1-163-038-00	s	CERAMIC, CHIP 0.1uF 25V
C509	1-102-963-00	s	CERAMIC 33PF 5% 50V
C510	1-102-963-00	s	CERAMIC 33PF 5% 50V
C511	1-163-038-00	s	CERAMIC, CHIP 0.1uF 25V
C512	1-163-038-00	s	CERAMIC, CHIP 0.1uF 25V
C513	1-163-038-00	s	CERAMIC, CHIP 0.1uF 25V
C514	1-163-038-00	s	CERAMIC, CHIP 0.1uF 25V
C515	1-124-257-00	s	ELECT 2.2uF 20% 50V
C516	1-124-257-00	s	ELECT 2.2uF 20% 50V
C517 to C527	1-163-038-00	s	CERAMIC, CHIP 0.1uF 25V
C528 to C552	1-164-087-11	s	CERAMIC 0.0015uF 10% 50V
C553 to C592	1-164-096-11	s	CERAMIC 0.01uF 50V
C593	1-163-038-00	s	CERAMIC, CHIP 0.1uF 25V
C601 to C625	1-163-038-00	s	CERAMIC, CHIP 0.1uF 25V

NOTE 1:Please see page 6-25 for the parts that are not listd in the parts list.

(IF-414 BOARD/CONSOLE)

Ref. No. or Q'ty	Part No.	SP	Description
C626	1-130-483-00	s	MYLAR 0.01uF 5% 50V
C627	1-130-483-00	s	MYLAR 0.01uF 5% 50V
C628 to C636	1-163-038-00	s	CERAMIC, CHIP 0.1uF 25V
C637	1-124-584-00	s	ELECT 100uF 20% 10V
C638	1-124-584-00	s	ELECT 100uF 20% 10V
C639	1-163-038-00	s	CERAMIC, CHIP 0.1uF 25V
C640 to C644	1-163-227-11	s	CERAMIC, CHIP 10PF 5% 50V
C701	1-126-935-11	s	ELECT 470uF 20% 16V
C702	1-163-038-00	s	CERAMIC, CHIP 0.1uF 25V
C703	1-126-941-11	s	ELECT 470uF 20% 25V
C704	1-163-038-00	s	CERAMIC, CHIP 0.1uF 25V
CN311	1-563-137-11	s	CONNECTOR, D-SUB 9P, FEMALE
CN312	1-563-137-11	s	CONNECTOR, D-SUB 9P, FEMALE
CN331	1-695-249-11	o	HEADER (STRAIGHT) 50P
CN332	1-506-555-11	o	HEADER 40P
CN333	1-506-555-11	o	HEADER 40P
CN341	1-695-965-11	o	HEADER (STRAIGHT) 10P
CN342	1-564-002-11	s	PIN, CONNECTOR 3P
CN351	1-563-018-11	o	CONNECTOR, F.P.C 34P
CN352	1-563-018-11	o	CONNECTOR, F.P.C 34P
CN353	1-564-411-11	o	PIN, CONNECTOR 50P
CN361	1-695-247-11	o	HEADER (STRAIGHT) 20P
CN362	1-695-246-11	o	HEADER (STRAIGHT) 16P
CN371	1-564-241-00	o	CONNECTOR, 4P, MALE
CNI115	1-526-816-21	s	SOCKET, IC (DP) 24P
CNI116	1-526-816-21	s	SOCKET, IC (DP) 24P
CNI117	1-526-816-21	s	SOCKET, IC (DP) 24P
CNI118	1-526-816-21	s	SOCKET, IC (DP) 24P
CNI119	1-526-656-00	s	SOCKET, IC (DP) 20P
CNI201	1-526-662-21	o	SOCKET, IC (DP) 40P
CNI202	1-526-662-21	o	SOCKET, IC (DP) 40P
CNI203	1-526-662-21	o	SOCKET, IC (DP) 40P
CNI204	1-526-662-21	o	SOCKET, IC (DP) 40P
CNI502	1-526-659-00	o	SOCKET, IC 28P
CNI511	1-526-656-00	s	SOCKET, IC (DP) 20P
CNI601	1-540-080-11	s	SOCKET, IC (IC113) 68P
CNI602	1-540-080-11	s	SOCKET, IC (IC113) 68P
COP101	1-562-579-11	s	RECEPTACLE, CONNECTOR 2P
COP201	1-562-579-11	s	RECEPTACLE, CONNECTOR 2P
COP202	1-562-579-11	s	RECEPTACLE, CONNECTOR 2P
COP203	1-562-579-11	s	RECEPTACLE, CONNECTOR 2P
COP204	1-562-579-11	s	RECEPTACLE, CONNECTOR 2P
D100	8-719-812-31	s	LED TLR123, RED
D101	8-719-812-31	s	LED TLR123, RED
D102 to D109	8-719-812-43	s	LED TLG124A, GRN
D201	8-719-987-87	s	DIODE ERA85-009
D401 to D416	8-719-911-19	s	DIODE 1SS119
D417 to D424	8-719-812-43	s	LED TLG124A, GRN
D425	8-719-200-02	s	DIODE 10E2
D501	8-719-911-19	s	DIODE 1SS119
D502	8-719-812-43	s	LED TLG124A, GRN
D503	8-719-812-43	s	LED TLG124A, GRN

NOTE 2:For the # marked in the following parts list, refer to section 7, Changed Parts.

(IF-414 BOARD/CONSOLE)

Ref. No. or Q'ty	Part No.	SP	Description
D504	8-719-812-43	s	LED TLG124A, GRN
D505	8-719-812-43	s	LED TLG124A, GRN
D506	8-719-911-19	s	DIODE 1SS119
D507	8-719-911-19	s	DIODE 1SS119
D601	8-719-911-19	s	DIODE 1SS119
D602	8-719-911-19	s	DIODE 1SS119
D603	8-719-911-19	s	DIODE 1SS119
D604	8-719-911-19	s	DIODE 1SS119
FB601 to FB605	1-216-021-00	s	METAL, CHIP 68 5% 1/10W
IC101	8-759-194-86	s	IC MC68302FC16C
IC102	8-759-972-58	s	IC MAX238CNG
IC103	8-759-989-91	s	IC TL7705ACPS
IC104	8-759-244-12	s	IC TC74AC175F
IC105	8-759-926-23	s	IC SN74HC163NS
IC106	8-759-926-23	s	IC SN74HC163NS
IC107	8-759-926-77	s	IC SN74HC541NS
IC108	8-759-926-54	s	IC SN74HC259ANS
IC109	8-759-033-10	s	IC MC74F32M
IC110	8-759-033-02	s	IC MC74F04M
IC111	8-759-239-92	s	IC TC74HC07AF
IC112	8-759-925-76	s	IC SN74HC08NS
IC113	8-759-925-80	s	IC SN74HC14NS
IC114	8-759-929-73	s	IC SN74LS00NS
IC115	8-759-247-74	o	IC 22V10B-4MDEC-V1.0
IC116	8-759-247-75	o	IC 22V10B-IOPDEC-V1.0
IC117	8-759-247-76	o	IC 22V10B-PSEL-V1.0
IC118	8-759-247-77	o	IC 22V10B-IOSEL-V1.0
IC119	8-759-247-78	o	IC 16V8B-IORW-V1.0
IC201	8-759-274-97	o	IC 27C4002-PNLAPL-V1.00 (FOR DMX-B4008)
	8-759-262-19	o	IC 27C4002-ELAP16-V1.00 (FOR DMX-B4016)
IC202	8-759-247-98	o	IC 27C4002-PNLDATA-V1.00 (FOR DMX-B4008)
	8-759-262-08	o	IC 27C4002-ELDT16-V1.00 (FOR DMX-B4016)
IC205 to IC212	8-752-365-27	s	IC CXK581000AM-70LL-TL
IC213	8-759-982-65	s	IC ICL7665SCPA
IC301	8-759-033-44	s	IC MC74F245M
IC302	8-759-033-44	s	IC MC74F245M
IC303	8-759-993-54	s	IC 74F541SJ
IC304	8-759-993-54	s	IC 74F541SJ
IC305	8-759-993-54	s	IC 74F541SJ
IC306	8-759-926-77	s	IC SN74HC541NS
IC307	8-759-033-03	s	IC MC74F08M
IC308 to IC313	8-759-993-54	s	IC 74F541SJ
IC314	8-759-033-44	s	IC MC74F245M
IC315	8-759-033-44	s	IC MC74F245M
IC316	8-759-033-44	s	IC MC74F245M
IC317	8-759-993-54	s	IC 74F541SJ
IC318	8-759-993-54	s	IC 74F541SJ
IC319	8-759-232-20	s	IC TC74HC21AF
IC401	8-759-926-11	s	IC SN74HC138NS
IC402	8-759-234-67	s	IC TMP82C79M-2

NOTE 1:Please see page 6-25 for the parts that are not listd in the parts list.

(IF-414 BOARD/CONSOLE)

Ref. No. or Q'ty	Part No.	SP	Description
IC403	8-759-925-74	s	IC TC74HC04NS
IC404	8-759-106-58	s	IC UPD7004C
IC405	8-759-171-05	s	IC UPC7805H
IC406	8-759-926-77	s	IC SN74HC541NS
IC407	8-759-926-82	s	IC SN74HC574ANS
IC408	8-759-926-77	s	IC SN74HC541NS
IC409	8-759-926-77	s	IC SN74HC541NS
IC410	8-759-925-85	s	IC SN74HC32NS
IC501	8-759-973-43	s	IC MB8421-90LPFQ
IC502	8-759-274-99	o	IC 27C256B-TPLNK-V1.00
IC503	8-759-144-67	s	IC UPD43256AGU-12L
IC504	8-759-246-66	s	IC TMPZ84C015BF-6
IC506	8-759-925-85	s	IC SN74HC32NS
IC507	8-759-925-74	s	IC TC74HC04NS
IC508	8-759-926-07	s	IC SN74HC132NS
IC509	8-759-926-23	s	IC SN74HC163NS
IC510	8-759-926-74	s	IC SN74HC393NS
IC511	8-759-247-79	o	IC 16V8B-ZDEC-V1.0
IC513	8-759-925-76	s	IC SN74HC08NS
IC514	8-759-926-82	s	IC SN74HC574ANS
IC515	8-759-926-11	s	IC SN74HC138NS
IC516	8-759-930-48	s	IC SN74LS156NS
IC517	8-759-930-48	s	IC SN74LS156NS
IC518	8-759-930-48	s	IC SN74LS156NS
IC519	8-759-930-48	s	IC SN74LS156NS
IC520 to IC525	8-759-926-44	s	IC SN74HC240ANS
IC526	8-759-239-55	s	IC TC74HC123AF
IC601	8-759-322-47	s	IC HD63484CP8
IC602	8-759-322-07	s	IC HD63487CP
IC603	8-759-247-02	s	IC HM514402BZ-8
IC604	8-759-247-02	s	IC HM514402BZ-8
IC607	8-759-926-82	s	IC SN74HC574ANS
IC608	8-759-992-78	s	IC 74F257ASJ
IC609	8-759-033-10	s	IC MC74F32M
IC610	8-759-033-02	s	IC MC74F04M
IC612	8-759-035-97	s	IC MC74F803N
IC613	8-759-990-68	s	IC 74F574SJ
IC614	8-759-993-54	s	IC 74F541SJ
IC615	8-759-181-88	s	IC 74F164ASJ
IC616	8-759-181-88	s	IC 74F164ASJ
IC617	8-759-992-29	s	IC 74F151ASJ
IC618	8-759-992-29	s	IC 74F151ASJ
IC619	8-759-990-68	s	IC 74F574SJ
IC620 to IC625	8-759-992-34	s	IC 74F161ASJ
IC626	8-759-929-86	s	IC SN74LS14NS
IC627	8-759-925-90	s	IC SN74HC74NS
IC628	8-759-948-03	s	IC 74F175SJ
IC629	8-759-181-88	s	IC 74F164ASJ
IC630	8-759-993-16	s	IC 74F379SJ
IC631	8-759-948-59	s	IC 74F163ASJ
IC632	8-759-991-85	s	IC 74F00SJ
IC633	8-759-993-54	s	IC 74F541SJ
JW100	1-564-947-21	o	PIN, SHORTING, 2P
JW101	1-564-947-21	o	PIN, SHORTING, 2P
JW102	1-564-947-21	o	PIN, SHORTING, 2P
JW201	1-564-947-21	o	PIN, SHORTING, 2P

NOTE 2:For the # marked in the following parts list, refer to section 7, Changed Parts.

(IF-414 BOARD/CONSOLE)

Ref. No. or Q'ty	Part No.	SP	Description
JW202	1-564-947-21	o	PIN, SHORTING, 2P
JW203	1-564-947-21	o	PIN, SHORTING, 2P
JW204	1-564-947-21	o	PIN, SHORTING, 2P
JW601	1-564-947-21	o	PIN, SHORTING, 2P
R114	1-249-411-11	s	CARBON 330 5% 1/4W
R115	1-249-411-11	s	CARBON 330 5% 1/4W
R116	1-249-411-11	s	CARBON 330 5% 1/4W
R117	1-249-411-11	s	CARBON 330 5% 1/4W
R118	1-249-425-11	s	CARBON 4.7K 5% 1/4W
R119	1-249-425-11	s	CARBON 4.7K 5% 1/4W
R120	1-249-425-11	s	CARBON 4.7K 5% 1/4W
R121	1-249-411-11	s	CARBON 330 5% 1/4W
R122	1-249-411-11	s	CARBON 330 5% 1/4W
R123	1-249-429-11	s	CARBON 10K 5% 1/4W
R124	1-249-429-11	s	CARBON 10K 5% 1/4W
R201	1-249-429-11	s	CARBON 10K 5% 1/4W
R202	1-249-429-11	s	CARBON 10K 5% 1/4W
R203	1-249-429-11	s	CARBON 10K 5% 1/4W
R204	1-249-429-11	s	CARBON 10K 5% 1/4W
R205	1-215-451-00	s	METAL 18K 1% 1/6W
R206	1-215-445-00	s	METAL 10K 1% 1/6W
R207	1-247-883-00	s	CARBON 150K 5% 1/4W
R208	1-249-393-11	s	CARBON 10 5% 1/4W
R209	1-249-441-11	s	CARBON 100K 5% 1/4W
R308	1-249-429-11	s	CARBON 10K 5% 1/4W
R309	1-249-425-11	s	CARBON 4.7K 5% 1/4W
R311	1-249-425-11	s	CARBON 4.7K 5% 1/4W
R313	1-249-393-11	s	CARBON 10 5% 1/4W
R314	1-249-393-11	s	CARBON 10 5% 1/4W
R315	1-249-393-11	s	CARBON 10 5% 1/4W
R503	1-249-429-11	s	CARBON 10K 5% 1/4W
R504	1-249-435-11	s	CARBON 33K 5% 1/4W
R505	1-249-429-11	s	CARBON 10K 5% 1/4W
R506	1-249-409-11	s	CARBON 220 5% 1/4W
R507	1-249-433-11	s	CARBON 22K 5% 1/4W
R601	1-249-429-11	s	CARBON 10K 5% 1/4W
R602	1-249-425-11	s	CARBON 4.7K 5% 1/4W
R603	1-249-425-11	s	CARBON 4.7K 5% 1/4W
#RB101	1-235-194-11	s	RESISTOR BLOCK 4.7KX8
RB102	1-235-337-11	s	RESISTOR BLOCK 22KX8
RB103	1-235-337-11	s	RESISTOR BLOCK 22KX8
RB104	1-235-332-11	s	RESISTOR BLOCK 470X8
RB105	1-231-533-00	s	RESISTOR BLOCK 10Kx4
RB301 to RB305	1-235-195-00	s	RESISTOR BLOCK 10KX8
RB401	1-235-337-11	s	RESISTOR BLOCK 22KX8
RB402	1-235-195-00	s	RESISTOR BLOCK 10KX8
RB403	1-235-332-11	s	RESISTOR BLOCK 470X8
RB404	1-235-195-00	s	RESISTOR BLOCK 10KX8
RB501	1-235-195-00	s	RESISTOR BLOCK 10KX8
RB502	1-235-195-00	s	RESISTOR BLOCK 10KX8
RB503	1-235-332-11	s	RESISTOR BLOCK 470X8
RB504	1-235-196-00	s	RESISTOR BLOCK 100kx8
RB505	1-235-196-00	s	RESISTOR BLOCK 100kx8
RB506	1-235-196-00	s	RESISTOR BLOCK 100kx8
RB507	1-235-196-00	s	RESISTOR BLOCK 100kx8
RB508 to RB512	1-235-341-11	s	RESISTOR BLOCK 220KX8

NOTE 1:Please see page 6-25 for the parts that are not listd in the parts list.

(IF-414 BOARD/CONSOLE)

Ref. No. or Q'ty	Part No.	SP	Description
RB602	1-235-195-00	s	RESISTOR BLOCK 10KX8
RB603	1-235-195-00	s	RESISTOR BLOCK 10KX8
RB604	1-235-195-00	s	RESISTOR BLOCK 10KX8
S101	1-554-937-11	s	SWITCH, PUSH
S102	1-570-266-11	s	SWITCH, PUSH (1 KEY)
S103	1-570-623-11	s	SWITCH, DIP 8-CKT
S401 to S408	1-692-813-11	s	SWITCH, ROTAIONAL PULSE
S409	1-570-623-11	s	SWITCH, DIP 8-CKT
S501	1-554-937-11	s	SWITCH, PUSH
S502	1-570-623-11	s	SWITCH, DIP 8-CKT
S601 to S606	1-554-080-00	s	SWITCH, DIGITAL
SP501	1-529-025-00	s	BUZZER
X101	1-577-258-11	s	CRYSTAL, 32MHz
X501	1-567-865-11	s	CRYSTAL, 12.00MHz
X601	1-578-074-11	s	CRYSTAL, 40MHz

NOTE 2:For the # marked in the following parts list, refer to section 7, Changed Parts.

KY-225 BOARD/CONSOLE

Ref. No. or Q'ty	Part No.	SP	Description
1pc	A-8275-405-A	o	MOUNTED CIRCUIT BOARD, KY-225
1pc	3-182-953-02	o	FILM, MUTE
8pcs	4-927-278-01	s	KEY TOP
C109	1-126-940-11	s	ELECT 330uF 20% 25V
C110	1-126-940-11	s	ELECT 330uF 20% 25V
C401	1-126-935-11	s	ELECT 470uF 20% 16V
C403	1-126-941-11	s	ELECT 470uF 20% 25V
C405	1-126-927-11	s	ELECT 2200uF 20% 10V
CN101	1-506-555-11	o	HEADER 40P
CN102	1-506-555-11	o	HEADER 40P
CN103	1-560-807-00	o	HEADER 60P
CN104	1-695-249-11	o	HEADER (STRAIGHT) 50P
CN105	1-695-953-21	s	CONNECTOR, BOARD TO BOARD 30P
CN106	1-695-953-21	s	CONNECTOR, BOARD TO BOARD 30P
CN107	1-564-241-00	o	CONNECTOR, 4P, MALE
D101	8-719-200-02	s	DIODE 10E2
FB401	1-236-163-11	s	ENCAPSULATED COMPONENT
FB402	1-236-163-11	s	ENCAPSULATED COMPONENT
IC101	8-759-926-49	s	IC SN74HC245NS
IC102	8-759-926-77	s	IC SN74HC541NS
IC103	8-759-926-17	s	IC SN74HC153NS
IC104	8-759-926-77	s	IC SN74HC541NS
IC105	8-759-926-11	s	IC SN74HC138NS
IC106	8-759-926-11	s	IC SN74HC138NS
IC107	8-759-171-05	s	IC UPC7805H
IC108	8-759-106-58	s	IC UPD7004C
IC201	8-759-234-67	s	IC TMP82C79M-2
IC202	8-759-159-81	s	IC TD62783AF
IC203	8-759-232-86	s	IC TC74HC238AF
IC204	8-759-051-53	s	IC TD62381F
IC205	8-759-232-86	s	IC TC74HC238AF
IC206	8-759-051-53	s	IC TD62381F
IC207	8-759-925-74	s	IC TC74HC04NS
IC301	8-759-996-51	s	IC CXD8125Q
IC302	8-759-996-51	s	IC CXD8125Q
IC303	8-759-996-51	s	IC CXD8125Q
IC304	8-759-051-53	s	IC TD62381F
IC305	8-759-051-53	s	IC TD62381F
IC306	8-759-051-53	s	IC TD62381F
IC307	8-759-051-53	s	IC TD62381F
IC308	8-759-051-53	s	IC TD62381F
IC501	8-759-926-98	s	IC SN74HC4040NS
IC502	8-759-926-98	s	IC SN74HC4040NS
IC503 to IC510	8-759-159-83	s	IC DLG2416
L401	1-414-049-11	s	COIL, CHOKE 400uH
R101 to R108	1-249-429-11	s	CARBON 10K 5% 1/4W
R201 to R208	1-249-397-11	s	CARBON 22 5% 1/4W
R301 to R308	1-249-411-11	s	CARBON 330 5% 1/4W
R317 to R324	1-249-411-11	s	CARBON 330 5% 1/4W

NOTE 1:Please see page 6-25 for the parts that are not listd in the parts list.

(KY-225 BOARD/CONSOLE)

Ref. No. or Q'ty	Part No.	SP	Description
RB101	1-231-525-00	s	RESISTOR BLOCK 4.7Kx4
RB102	1-231-410-00	s	RESISTOR BLOCK 10Kx8
RB201	1-231-410-00	s	RESISTOR BLOCK 10Kx8
RB301 to RB306	1-231-410-00	s	RESISTOR BLOCK 10Kx8
S101	1-554-080-00	s	SWITCH, DIGITAL
S601 to S608	1-571-656-21	s	SWITCH, TACTIL
S609 to S616	1-692-823-11	s	SWITCH, TACTILE

LED-156 BOARD/CONSOLE

Ref. No. or Q'ty	Part No.	SP	Description
1pc	A-8275-406-A	o	MOUNTED CIRCUIT BOARD, LED-156
CN1	1-691-942-11	s	CONNECTOR, BOARD TO BOARD 30P
D1 to D64	8-719-981-33	s	DIODE GL1HY51

NOTE 2:For the # marked in the following parts list, refer to section 7, Changed Parts.

MOA-7 BOARD/CONSOLE

Ref. No. or Q'ty	Part No.	SP	Description
1pc	A-8275-417-A	o	MOUNTED CIRCUIT BOARD, MOA-7A (FOR UC/EK)
1pc	A-8275-418-A	o	MOUNTED CIRCUIT BOARD, MOA-7B (FOR J)
3pcs	7-682-903-01	s	SCREW +PWH 3X5
3pcs	7-682-548-04	s	SCREW +B 3X8
3pcs	7-684-023-04	s	N 3, TYPE 2
22pcs	7-621-259-35	s	SCREW +P 2.6X5
C101	1-102-106-00	s	CERAMIC 100PF 10% 50V
C102	1-102-106-00	s	CERAMIC 100PF 10% 50V
C103	1-124-910-11	s	ELECT 47uF 20% 50V
C104	1-124-910-11	s	ELECT 47uF 20% 50V
C105	1-102-106-00	s	CERAMIC 100PF 10% 50V
C106	1-102-106-00	s	CERAMIC 100PF 10% 50V
C107	1-126-233-11	s	ELECT 22uF 20% 50V
C108	1-102-106-00	s	CERAMIC 100PF 10% 50V
C109	1-102-106-00	s	CERAMIC 100PF 10% 50V
C110	1-124-910-11	s	ELECT 47uF 20% 50V
C111	1-124-910-11	s	ELECT 47uF 20% 50V
C112	1-102-106-00	s	CERAMIC 100PF 10% 50V
C113	1-102-106-00	s	CERAMIC 100PF 10% 50V
C114	1-126-233-11	s	ELECT 22uF 20% 50V
C115	1-124-910-11	s	ELECT 47uF 20% 50V
C116	1-102-963-00	s	CERAMIC 33PF 5% 50V
C117	1-126-233-11	s	ELECT 22uF 20% 50V
C118	1-124-910-11	s	ELECT 47uF 20% 50V
C119	1-102-963-00	s	CERAMIC 33PF 5% 50V
C120	1-126-233-11	s	ELECT 22uF 20% 50V
C129	1-124-915-11	s	ELECT 10uF 20% 63V
C130	1-126-233-11	s	ELECT 22uF 20% 50V
C131	1-124-915-11	s	ELECT 10uF 20% 63V
C132	1-102-963-00	s	CERAMIC 33PF 5% 50V
C133	1-124-913-11	s	ELECT 470uF 20% 50V
C134	1-124-913-11	s	ELECT 470uF 20% 50V
C135	1-124-915-11	s	ELECT 10uF 20% 63V
C136	1-126-233-11	s	ELECT 22uF 20% 50V
C137	1-124-915-11	s	ELECT 10uF 20% 63V
C138	1-102-963-00	s	CERAMIC 33PF 5% 50V
C139	1-124-913-11	s	ELECT 470uF 20% 50V
C140	1-124-913-11	s	ELECT 470uF 20% 50V
C201	1-102-106-00	s	CERAMIC 100PF 10% 50V
C202	1-102-106-00	s	CERAMIC 100PF 10% 50V
C203	1-124-910-11	s	ELECT 47uF 20% 50V
C204	1-124-910-11	s	ELECT 47uF 20% 50V
C205	1-102-106-00	s	CERAMIC 100PF 10% 50V
C206	1-102-106-00	s	CERAMIC 100PF 10% 50V
C207	1-126-233-11	s	ELECT 22uF 20% 50V
C208	1-102-106-00	s	CERAMIC 100PF 10% 50V
C209	1-102-106-00	s	CERAMIC 100PF 10% 50V
C210	1-124-910-11	s	ELECT 47uF 20% 50V
C211	1-124-910-11	s	ELECT 47uF 20% 50V
C212	1-102-106-00	s	CERAMIC 100PF 10% 50V
C213	1-102-106-00	s	CERAMIC 100PF 10% 50V
C214	1-126-233-11	s	ELECT 22uF 20% 50V
C215	1-124-910-11	s	ELECT 47uF 20% 50V
C216	1-102-963-00	s	CERAMIC 33PF 5% 50V
C217	1-126-233-11	s	ELECT 22uF 20% 50V
C218	1-124-910-11	s	ELECT 47uF 20% 50V

NOTE 1:Please see page 6-25 for the parts that are not listd in the parts list.

(MOA-7 BOARD/CONSOLE)

Ref. No. or Q'ty	Part No.	SP	Description
C219	1-102-963-00	s	CERAMIC 33PF 5% 50V
C220	1-126-233-11	s	ELECT 22uF 20% 50V
C225	1-124-915-11	s	ELECT 10uF 20% 63V
C226	1-126-233-11	s	ELECT 22uF 20% 50V
C227	1-124-915-11	s	ELECT 10uF 20% 63V
C228	1-102-963-00	s	CERAMIC 33PF 5% 50V
C229	1-124-913-11	s	ELECT 470uF 20% 50V
C230	1-124-913-11	s	ELECT 470uF 20% 50V
C231	1-124-915-11	s	ELECT 10uF 20% 63V
C232	1-126-233-11	s	ELECT 22uF 20% 50V
C233	1-124-915-11	s	ELECT 10uF 20% 63V
C234	1-102-963-00	s	CERAMIC 33PF 5% 50V
C235	1-124-913-11	s	ELECT 470uF 20% 50V
C236	1-124-913-11	s	ELECT 470uF 20% 50V
C237	1-124-915-11	s	ELECT 10uF 20% 63V
C238	1-102-963-00	s	CERAMIC 33PF 5% 50V
C239	1-126-934-11	s	ELECT 220uF 20% 16V
C240	1-126-934-11	s	ELECT 220uF 20% 16V
C241	1-124-915-11	s	ELECT 10uF 20% 63V
C242	1-102-963-00	s	CERAMIC 33PF 5% 50V
C243	1-126-934-11	s	ELECT 220uF 20% 16V
C244	1-126-934-11	s	ELECT 220uF 20% 16V
C301	1-102-106-00	s	CERAMIC 100PF 10% 50V
C302	1-102-106-00	s	CERAMIC 100PF 10% 50V
C303	1-124-910-11	s	ELECT 47uF 20% 50V
C304	1-124-910-11	s	ELECT 47uF 20% 50V
C305	1-102-106-00	s	CERAMIC 100PF 10% 50V
C306	1-102-106-00	s	CERAMIC 100PF 10% 50V
C307	1-126-233-11	s	ELECT 22uF 20% 50V
C308	1-102-106-00	s	CERAMIC 100PF 10% 50V
C309	1-102-106-00	s	CERAMIC 100PF 10% 50V
C310	1-124-910-11	s	ELECT 47uF 20% 50V
C311	1-124-910-11	s	ELECT 47uF 20% 50V
C312	1-102-106-00	s	CERAMIC 100PF 10% 50V
C313	1-102-106-00	s	CERAMIC 100PF 10% 50V
C314	1-126-233-11	s	ELECT 22uF 20% 50V
C315	1-102-106-00	s	CERAMIC 100PF 10% 50V
C316	1-102-106-00	s	CERAMIC 100PF 10% 50V
C317	1-124-910-11	s	ELECT 47uF 20% 50V
C318	1-124-910-11	s	ELECT 47uF 20% 50V
C319	1-102-106-00	s	CERAMIC 100PF 10% 50V
C320	1-102-106-00	s	CERAMIC 100PF 10% 50V
C321	1-126-233-11	s	ELECT 22uF 20% 50V
C322	1-102-106-00	s	CERAMIC 100PF 10% 50V
C323	1-102-106-00	s	CERAMIC 100PF 10% 50V
C324	1-124-910-11	s	ELECT 47uF 20% 50V
C325	1-124-910-11	s	ELECT 47uF 20% 50V
C326	1-102-106-00	s	CERAMIC 100PF 10% 50V
C327	1-102-106-00	s	CERAMIC 100PF 10% 50V
C328	1-126-233-11	s	ELECT 22uF 20% 50V
C333	1-124-915-11	s	ELECT 10uF 20% 63V
C334	1-126-233-11	s	ELECT 22uF 20% 50V
C335	1-124-915-11	s	ELECT 10uF 20% 63V
C336	1-102-963-00	s	CERAMIC 33PF 5% 50V
C337	1-124-913-11	s	ELECT 470uF 20% 50V
C338	1-124-913-11	s	ELECT 470uF 20% 50V
C339	1-124-915-11	s	ELECT 10uF 20% 63V
C340	1-126-233-11	s	ELECT 22uF 20% 50V
C341	1-124-915-11	s	ELECT 10uF 20% 63V

NOTE 2:For the # marked in the following parts list, refer to section 7, Changed Parts.

(MOA-7 BOARD/CONSOLE)

Ref. No. or Q'ty	Part No.	SP	Description
C342	1-102-963-00	s	CERAMIC 33PF 5% 50V
C343	1-124-913-11	s	ELECT 470uF 20% 50V
C344	1-124-913-11	s	ELECT 470uF 20% 50V
C401	1-124-910-11	s	ELECT 47uF 20% 50V
C402	1-102-963-00	s	CERAMIC 33PF 5% 50V
C403	1-102-963-00	s	CERAMIC 33PF 5% 50V
C404	1-126-233-11	s	ELECT 22uF 20% 50V
C405	1-124-910-11	s	ELECT 47uF 20% 50V
C406	1-102-963-00	s	CERAMIC 33PF 5% 50V
C407	1-102-963-00	s	CERAMIC 33PF 5% 50V
C408	1-126-233-11	s	ELECT 22uF 20% 50V
C417	1-124-915-11	s	ELECT 10uF 20% 63V
C418	1-102-963-00	s	CERAMIC 33PF 5% 50V
C419	1-124-915-11	s	ELECT 10uF 20% 63V
C420	1-102-963-00	s	CERAMIC 33PF 5% 50V
C501	1-102-106-00	s	CERAMIC 100PF 10% 50V
C502	1-102-106-00	s	CERAMIC 100PF 10% 50V
C503	1-126-022-11	s	ELECT 47uF 20% 25V
C504	1-126-022-11	s	ELECT 47uF 20% 25V
C505	1-102-106-00	s	CERAMIC 100PF 10% 50V
C506	1-102-106-00	s	CERAMIC 100PF 10% 50V
C507	1-124-248-00	s	ELECT 22uF 20% 35V
C508	1-102-106-00	s	CERAMIC 100PF 10% 50V
C509	1-102-106-00	s	CERAMIC 100PF 10% 50V
C510	1-126-022-11	s	ELECT 47uF 20% 25V
C511	1-126-022-11	s	ELECT 47uF 20% 25V
C512	1-102-106-00	s	CERAMIC 100PF 10% 50V
C513	1-102-106-00	s	CERAMIC 100PF 10% 50V
C514	1-124-248-00	s	ELECT 22uF 20% 35V
C517	1-102-106-00	s	CERAMIC 100PF 10% 50V
C518	1-102-106-00	s	CERAMIC 100PF 10% 50V
C519	1-126-022-11	s	ELECT 47uF 20% 25V
C520	1-126-022-11	s	ELECT 47uF 20% 25V
C521	1-102-106-00	s	CERAMIC 100PF 10% 50V
C522	1-102-106-00	s	CERAMIC 100PF 10% 50V
C523	1-124-248-00	s	ELECT 22uF 20% 35V
C524	1-126-096-11	s	ELECT 10uF 20% 35V
C525	1-102-963-00	s	CERAMIC 33PF 5% 50V
C526	1-124-248-00	s	ELECT 22uF 20% 35V
C527	1-102-106-00	s	CERAMIC 100PF 10% 50V
C528	1-102-106-00	s	CERAMIC 100PF 10% 50V
C529	1-126-022-11	s	ELECT 47uF 20% 25V
C530	1-126-022-11	s	ELECT 47uF 20% 25V
C531	1-102-106-00	s	CERAMIC 100PF 10% 50V
C532	1-102-106-00	s	CERAMIC 100PF 10% 50V
C533	1-124-248-00	s	ELECT 22uF 20% 35V
C534	1-126-096-11	s	ELECT 10uF 20% 35V
C535	1-102-963-00	s	CERAMIC 33PF 5% 50V
C536	1-124-248-00	s	ELECT 22uF 20% 35V
C601	1-124-248-00	s	ELECT 22uF 20% 35V
C603	1-102-106-00	s	CERAMIC 100PF 10% 50V
C604	1-126-022-11	s	ELECT 47uF 20% 25V
C605	1-126-096-11	s	ELECT 10uF 20% 35V
C606	1-126-160-11	s	ELECT 1uF 20% 50V
C607	1-130-489-00	s	MYLAR 0.033uF 5% 50V
C608	1-126-022-11	s	ELECT 47uF 20% 25V
C609	1-102-106-00	s	CERAMIC 100PF 10% 50V
C610	1-102-106-00	s	CERAMIC 100PF 10% 50V
C611	1-126-022-11	s	ELECT 47uF 20% 25V

NOTE 1:Please see page 6-25 for the parts that are not listd in the parts list.

(MOA-7 BOARD/CONSOLE)

Ref. No. or Q'ty	Part No.	SP	Description
C612	1-126-022-11	s	ELECT 47uF 20% 25V
C613	1-102-106-00	s	CERAMIC 100PF 10% 50V
C614	1-102-106-00	s	CERAMIC 100PF 10% 50V
C615	1-124-248-00	s	ELECT 22uF 20% 35V
C618	1-124-248-00	s	ELECT 22uF 20% 35V
C619	1-102-963-00	s	CERAMIC 33PF 5% 50V
C620	1-124-248-00	s	ELECT 22uF 20% 35V
C621	1-126-022-11	s	ELECT 47uF 20% 25V
C622	1-102-963-00	s	CERAMIC 33PF 5% 50V
C623	1-124-248-00	s	ELECT 22uF 20% 35V
C626	1-126-096-11	s	ELECT 10uF 20% 35V
C627	1-102-963-00	s	CERAMIC 33PF 5% 50V
C628	1-126-934-11	s	ELECT 220uF 20% 16V
C629	1-126-934-11	s	ELECT 220uF 20% 16V
C630	1-126-096-11	s	ELECT 10uF 20% 35V
C631	1-102-963-00	s	CERAMIC 33PF 5% 50V
C632	1-126-934-11	s	ELECT 220uF 20% 16V
C633	1-126-934-11	s	ELECT 220uF 20% 16V
C634	1-126-096-11	s	ELECT 10uF 20% 35V
C635	1-102-963-00	s	CERAMIC 33PF 5% 50V
C636	1-126-934-11	s	ELECT 220uF 20% 16V
C637	1-126-934-11	s	ELECT 220uF 20% 16V
C638	1-126-096-11	s	ELECT 10uF 20% 35V
C639	1-102-963-00	s	CERAMIC 33PF 5% 50V
C640	1-124-248-00	s	ELECT 22uF 20% 35V
C701	1-102-106-00	s	CERAMIC 100PF 10% 50V
C702	1-102-106-00	s	CERAMIC 100PF 10% 50V
C703	1-126-022-11	s	ELECT 47uF 20% 25V
C704	1-126-022-11	s	ELECT 47uF 20% 25V
C705	1-102-106-00	s	CERAMIC 100PF 10% 50V
C706	1-102-106-00	s	CERAMIC 100PF 10% 50V
C707	1-124-248-00	s	ELECT 22uF 20% 35V
C708	1-102-106-00	s	CERAMIC 100PF 10% 50V
C709	1-102-106-00	s	CERAMIC 100PF 10% 50V
C710	1-126-022-11	s	ELECT 47uF 20% 25V
C711	1-126-022-11	s	ELECT 47uF 20% 25V
C712	1-102-106-00	s	CERAMIC 100PF 10% 50V
C713	1-102-106-00	s	CERAMIC 100PF 10% 50V
C714	1-124-248-00	s	ELECT 22uF 20% 35V
C715	1-126-022-11	s	ELECT 47uF 20% 25V
C716	1-102-106-00	s	CERAMIC 100PF 10% 50V
C717	1-124-248-00	s	ELECT 22uF 20% 35V
C718	1-126-022-11	s	ELECT 47uF 20% 25V
C719	1-102-106-00	s	CERAMIC 100PF 10% 50V
C720	1-124-248-00	s	ELECT 22uF 20% 35V
C729	1-126-022-11	s	ELECT 47uF 20% 25V
C730	1-102-963-00	s	CERAMIC 33PF 5% 50V
C731	1-124-248-00	s	ELECT 22uF 20% 35V
C732	1-126-096-11	s	ELECT 10uF 20% 35V
C733	1-124-248-00	s	ELECT 22uF 20% 35V
C734	1-124-248-00	s	ELECT 22uF 20% 35V
C735	1-102-963-00	s	CERAMIC 33PF 5% 50V
C736	1-124-248-00	s	ELECT 22uF 20% 35V
C737	1-124-248-00	s	ELECT 22uF 20% 35V
C738	1-102-963-00	s	CERAMIC 33PF 5% 50V
C739	1-124-248-00	s	ELECT 22uF 20% 35V
C740	1-126-096-11	s	ELECT 10uF 20% 35V
C741	1-124-257-00	s	ELECT 2.2uF 20% 50V
C742	1-130-499-00	s	MYLAR 0.22uF 5% 50V

NOTE 2:For the # marked in the following parts list, refer to section 7, Changed Parts.

(MOA-7 BOARD/CONSOLE)

Ref. No. or Q'ty	Part No.	SP	Description
C749	1-126-934-11	s	ELECT 220uF 20% 16V
C790	1-126-934-11	s	ELECT 220uF 20% 16V
C804	1-126-096-11	s	ELECT 10uF 20% 35V
#C826	1-161-485-00	s	CERAMIC 0.1uF 50V
C901	1-124-911-11	s	ELECT 220uF 20% 50V
C903	1-124-911-11	s	ELECT 220uF 20% 50V
C905	1-124-911-11	s	ELECT 220uF 20% 50V
C907	1-124-911-11	s	ELECT 220uF 20% 50V
C909	1-126-934-11	s	ELECT 220uF 20% 16V
C911	1-126-934-11	s	ELECT 220uF 20% 16V
C951 to C975	1-162-896-11	s	CERAMIC 0.01uF 10% 50V
CN1	1-568-005-11	s	CONNECTOR, XLR 3P, FEMALE (FOR UC/EK)
CN1	1-568-006-11	s	CONNECTOR, XLR 3P, MALE (FOR J)
CN2	1-568-005-11	s	CONNECTOR, XLR 3P, FEMALE (FOR UC/EK)
CN2	1-568-006-11	s	CONNECTOR, XLR 3P, MALE (FOR J)
CN3	1-568-005-11	s	CONNECTOR, XLR 3P, FEMALE (FOR UC/EK)
CN3	1-568-006-11	s	CONNECTOR, XLR 3P, MALE (FOR J)
CN4	1-568-005-11	s	CONNECTOR, XLR 3P, FEMALE (FOR UC/EK)
CN4	1-568-006-11	s	CONNECTOR, XLR 3P, MALE (FOR J)
CN5	1-568-005-11	s	CONNECTOR, XLR 3P, FEMALE (FOR UC/EK)
CN5	1-568-006-11	s	CONNECTOR, XLR 3P, MALE (FOR J)
CN6	1-568-005-11	s	CONNECTOR, XLR 3P, FEMALE (FOR UC/EK)
CN6	1-568-006-11	s	CONNECTOR, XLR 3P, MALE (FOR J)
CN7	1-568-005-11	s	CONNECTOR, XLR 3P, FEMALE (FOR UC/EK)
CN7	1-568-006-11	s	CONNECTOR, XLR 3P, MALE (FOR J)
CN8	1-568-005-11	s	CONNECTOR, XLR 3P, FEMALE (FOR UC/EK)
CN8	1-568-006-11	s	CONNECTOR, XLR 3P, MALE (FOR J)
CN9	1-568-005-11	s	CONNECTOR, XLR 3P, FEMALE (FOR UC/EK)
CN9	1-568-006-11	s	CONNECTOR, XLR 3P, MALE (FOR J)
CN10	1-568-005-11	s	CONNECTOR, XLR 3P, FEMALE (FOR UC/EK)
CN10	1-568-006-11	s	CONNECTOR, XLR 3P, MALE (FOR J)
CN11	1-568-005-11	s	CONNECTOR, XLR 3P, MALE
CN500	1-564-675-11	o	PIN, CONNECTOR 8P
CN501	1-560-806-00	o	HEADER 34P
CN502	1-506-555-11	o	HEADER 40P
CN503	1-695-248-11	o	HEADER (STRAIGHT) 26P
CN504	1-569-051-11	o	CONNECTOR, PS TYPE 40P, MALE
CN505	1-564-013-11	o	PIN, CONNECTOR 3P
CN506	1-564-013-21	s	PIN, CONNECTOR 3P
CN507	1-564-014-11	s	PIN, CONNECTOR 4P
CN508	1-506-483-21	s	CONNECTOR, 4P, MALE
CN509	1-506-483-21	s	CONNECTOR, 4P, MALE
CN510	1-695-251-11	o	HEADER (RIGHT ANGLE TYPE) 20P
CN511	1-695-250-11	o	HEADER (RIGHT ANGLE TYPE) 16P

NOTE 1:Please see page 6-25 for the parts that are not listd in the parts list.

(MOA-7 BOARD/CONSOLE)

Ref. No. or Q'ty	Part No.	SP	Description
COP102	1-563-859-11	s	PLUG, SHORTING
COP104	1-563-859-11	s	PLUG, SHORTING
COP201	1-563-859-11	s	PLUG, SHORTING
COP203	1-563-859-11	s	PLUG, SHORTING
COP501	1-563-859-11	s	PLUG, SHORTING
COP503	1-563-859-11	s	PLUG, SHORTING
COP802	1-563-859-11	s	PLUG, SHORTING
COP804	1-563-859-11	s	PLUG, SHORTING
COP805	1-563-859-11	s	PLUG, SHORTING
COP807	1-563-859-11	s	PLUG, SHORTING
COP810	1-563-859-11	s	PLUG, SHORTING
COP812	1-563-859-11	s	PLUG, SHORTING
COP814	1-563-859-11	s	PLUG, SHORTING
COP815	1-563-859-11	s	PLUG, SHORTING
COP817	1-563-859-11	s	PLUG, SHORTING
COP820	1-563-859-11	s	PLUG, SHORTING
COP822	1-563-859-11	s	PLUG, SHORTING
COP823	1-563-859-11	s	PLUG, SHORTING
D601	8-719-911-19	s	DIODE 1SS119
D602	8-719-911-19	s	DIODE 1SS119
D801 to D808	8-719-911-19	s	DIODE 1SS119
D901	8-719-200-02	s	DIODE 10E2
D902	8-719-200-02	s	DIODE 10E2
FL101	1-236-163-11	s	ENCAPSULATED COMPONENT (FOR J)
FL102	1-236-163-11	s	ENCAPSULATED COMPONENT (FOR UC/EK)
FL103	1-236-163-11	s	ENCAPSULATED COMPONENT
FL104	1-236-163-11	s	ENCAPSULATED COMPONENT (FOR J)
FL105	1-236-163-11	s	ENCAPSULATED COMPONENT (FOR UC/EK)
FL106	1-236-163-11	s	ENCAPSULATED COMPONENT
FL107	1-236-163-11	s	ENCAPSULATED COMPONENT (FOR J)
FL108	1-236-163-11	s	ENCAPSULATED COMPONENT (FOR UC/EK)
FL109	1-236-163-11	s	ENCAPSULATED COMPONENT
FL110	1-236-163-11	s	ENCAPSULATED COMPONENT (FOR J)
FL111	1-236-163-11	s	ENCAPSULATED COMPONENT (FOR UC/EK)
FL112	1-236-163-11	s	ENCAPSULATED COMPONENT
FL201	1-236-163-11	s	ENCAPSULATED COMPONENT (FOR J)
FL202	1-236-163-11	s	ENCAPSULATED COMPONENT (FOR UC/EK)
FL203	1-236-163-11	s	ENCAPSULATED COMPONENT
FL204	1-236-163-11	s	ENCAPSULATED COMPONENT (FOR J)
FL205	1-236-163-11	s	ENCAPSULATED COMPONENT (FOR UC/EK)
FL206	1-236-163-11	s	ENCAPSULATED COMPONENT
FL207	1-236-163-11	s	ENCAPSULATED COMPONENT (FOR J)
FL208	1-236-163-11	s	ENCAPSULATED COMPONENT (FOR UC/EK)
FL209	1-236-163-11	s	ENCAPSULATED COMPONENT
FL210	1-236-163-11	s	ENCAPSULATED COMPONENT (FOR J)
FL211	1-236-163-11	s	ENCAPSULATED COMPONENT (FOR UC/EK)

NOTE 2:For the # marked in the following parts list, refer to section 7, Changed Parts.

(MOA-7 BOARD/CONSOLE)

Ref. No. or Q'ty	Part No.	SP	Description
FL212	1-236-163-11	s	ENCAPSULATED COMPONENT
FL301	1-236-163-11	s	ENCAPSULATED COMPONENT (FOR J)
FL302	1-236-163-11	s	ENCAPSULATED COMPONENT (FOR UC/EK)
FL303	1-236-163-11	s	ENCAPSULATED COMPONENT
FL304	1-236-163-11	s	ENCAPSULATED COMPONENT (FOR J)
FL305	1-236-163-11	s	ENCAPSULATED COMPONENT (FOR UC/EK)
FL306	1-236-163-11	s	ENCAPSULATED COMPONENT
IC101	8-759-900-72	s	IC NE5532P
IC102	8-759-900-72	s	IC NE5532P
IC103	8-759-107-35	s	IC UPD5201C
IC104	8-759-107-35	s	IC UPD5201C
IC105	8-759-900-72	s	IC NE5532P
IC106	8-759-900-72	s	IC NE5532P
IC107	8-759-107-35	s	IC UPD5201C
IC108	8-759-158-99	s	IC SSM-2142P
IC109	8-759-158-99	s	IC SSM-2142P
IC201	8-759-900-72	s	IC NE5532P
IC202	8-759-900-72	s	IC NE5532P
IC203	8-759-900-72	s	IC NE5532P
IC204	8-759-900-72	s	IC NE5532P
IC205	8-759-107-35	s	IC UPD5201C
IC206	8-759-107-35	s	IC UPD5201C
IC207	8-759-158-99	s	IC SSM-2142P
IC208	8-759-158-99	s	IC SSM-2142P
IC209	8-759-900-72	s	IC NE5532P
IC210	8-759-158-99	s	IC SSM-2142P
IC211	8-759-158-99	s	IC SSM-2142P
IC301	8-759-900-72	s	IC NE5532P
IC302	8-759-900-72	s	IC NE5532P
IC303	8-759-900-72	s	IC NE5532P
IC304	8-759-900-72	s	IC NE5532P
IC305	8-759-107-35	s	IC UPD5201C
IC306	8-759-158-99	s	IC SSM-2142P
IC307	8-759-158-99	s	IC SSM-2142P
IC401	8-759-107-35	s	IC UPD5201C
IC402	8-759-107-35	s	IC UPD5201C
IC403	8-759-900-72	s	IC NE5532P
IC404	8-759-900-72	s	IC NE5532P
IC405	8-759-900-72	s	IC NE5532P
IC501	8-759-145-58	s	IC UPC4558C
IC502	8-759-145-58	s	IC UPC4558C
IC503	8-759-145-58	s	IC UPC4558C
IC601	8-759-145-58	s	IC UPC4558C
IC602	8-759-145-58	s	IC UPC4558C
IC603	8-759-107-35	s	IC UPD5201C
IC604	8-759-145-58	s	IC UPC4558C
IC605	8-759-145-58	s	IC UPC4558C
IC606	8-759-158-99	s	IC SSM-2142P
IC607	8-759-158-99	s	IC SSM-2142P
IC608	8-759-158-99	s	IC SSM-2142P
IC701	8-759-145-58	s	IC UPC4558C
IC702	8-759-145-58	s	IC UPC4558C
IC703	8-759-107-35	s	IC UPD5201C
IC704	8-759-107-35	s	IC UPD5201C
IC705	8-759-145-58	s	IC UPC4558C
IC706	8-759-145-58	s	IC UPC4558C

NOTE 1:Please see page 6-25 for the parts that are not listd in the parts list.

(MOA-7 BOARD/CONSOLE)

Ref. No. or Q'ty	Part No.	SP	Description
IC707	8-759-107-35	s	IC UPD5201C
IC708	8-759-111-73	s	IC UPC1238H
IC801	8-759-291-30	s	IC TC9130P
IC802	8-759-916-20	s	IC SN74HC14AN
IC803	8-759-916-20	s	IC SN74HC14AN
IC804	8-759-916-14	s	IC SN74HC04N
IC805	8-759-234-62	s	IC TC74HC4072AP
IC806	8-759-916-12	s	IC SN74HC00N
IC807	8-759-916-23	s	IC SN74HC27N
IC808	8-759-916-18	s	IC SN74HC10N
IC809	8-759-921-82	s	IC SN74HC4075N
IC810	8-759-916-14	s	IC SN74HC04N
IC811	8-759-916-14	s	IC SN74HC04N
IC812	8-759-916-14	s	IC SN74HC04N
IC813	8-759-207-07	s	IC TD62381P
IC901	8-759-013-10	s	IC MC7815CT
IC902	8-759-012-72	s	IC MC7915CT
JW101	1-566-388-11	s	CONNECTOR 8P, MALE
JW105	1-535-303-00	o	WIRE, JUMPER (FOR UC/EK)
JW106	1-535-303-00	o	WIRE, JUMPER (FOR J)
JW107	1-535-303-00	o	WIRE, JUMPER (FOR UC/EK)
JW108	1-535-303-00	o	WIRE, JUMPER (FOR J)
JW109	1-535-303-00	o	WIRE, JUMPER (FOR UC/EK)
JW110	1-535-303-00	o	WIRE, JUMPER (FOR J)
JW111	1-535-303-00	o	WIRE, JUMPER (FOR UC/EK)
JW112	1-535-303-00	o	WIRE, JUMPER (FOR J)
JW201	1-566-388-11	s	CONNECTOR 8P, MALE
JW205	1-535-303-00	o	WIRE, JUMPER (FOR UC/EK)
JW206	1-535-303-00	o	WIRE, JUMPER (FOR J)
JW207	1-535-303-00	o	WIRE, JUMPER (FOR UC/EK)
JW208	1-535-303-00	o	WIRE, JUMPER (FOR J)
JW209	1-535-303-00	o	WIRE, JUMPER (FOR UC/EK)
JW210	1-535-303-00	o	WIRE, JUMPER (FOR J)
JW211	1-535-303-00	o	WIRE, JUMPER (FOR UC/EK)
JW212	1-535-303-00	o	WIRE, JUMPER (FOR J)
JW301	1-535-303-00	o	WIRE, JUMPER (FOR UC/EK)
JW302	1-535-303-00	o	WIRE, JUMPER (FOR J)
JW303	1-535-303-00	o	WIRE, JUMPER (FOR UC/EK)
JW304	1-535-303-00	o	WIRE, JUMPER (FOR J)
JW501	1-566-388-11	s	CONNECTOR 8P, MALE
JW801	1-566-388-11	s	CONNECTOR 8P, MALE
JW805	1-566-388-11	s	CONNECTOR 8P, MALE
JW809	1-566-391-11	o	CONNECTOR 12P, MALE
JW815	1-566-388-11	s	CONNECTOR 8P, MALE
JW819	1-566-388-11	s	CONNECTOR 8P, MALE
JW823	1-566-388-11	s	CONNECTOR 8P, MALE
Q601	8-729-203-04	s	TRANSISTOR 2SK30A-GR
Q801	8-729-016-11	s	TRANSISTOR 2SD1507M
Q802	8-729-016-11	s	TRANSISTOR 2SD1507M
Q803	8-729-900-87	s	TRANSISTOR DTC124XF
R101	1-215-456-00	s	METAL 30K 1% 1/6W
R102	1-215-449-00	s	METAL 15K 1% 1/6W
R103	1-215-449-00	s	METAL 15K 1% 1/6W
R104	1-215-432-00	s	METAL 3K 1% 1/6W
R105	1-215-432-00	s	METAL 3K 1% 1/6W
R107	1-215-456-00	s	METAL 30K 1% 1/6W
R108	1-215-449-00	s	METAL 15K 1% 1/6W
R109	1-215-449-00	s	METAL 15K 1% 1/6W

NOTE 2:For the # marked in the following parts list, refer to section 7, Changed Parts.

(MOA-7 BOARD/CONSOLE)

Ref. No. or Q'ty	Part No.	SP	Description
R110	1-215-432-00	s	METAL 3K 1% 1/6W
R111	1-215-432-00	s	METAL 3K 1% 1/6W
#R113 to R123	1-215-452-00	s	METAL 20K 1% 1/6W
R126	1-215-413-00	s	METAL 470 1% 1/6W
R129	1-215-449-00	s	METAL 15K 1% 1/6W
R130	1-215-452-00	s	METAL 20K 1% 1/6W
R133	1-215-416-00	s	METAL 620 1% 1/6W
R135	1-215-413-00	s	METAL 470 1% 1/6W
R138	1-215-449-00	s	METAL 15K 1% 1/6W
R139	1-215-452-00	s	METAL 20K 1% 1/6W
R142	1-215-416-00	s	METAL 620 1% 1/6W
R201	1-215-456-00	s	METAL 30K 1% 1/6W
R202	1-215-449-00	s	METAL 15K 1% 1/6W
R203	1-215-449-00	s	METAL 15K 1% 1/6W
R204	1-215-432-00	s	METAL 3K 1% 1/6W
R205	1-215-432-00	s	METAL 3K 1% 1/6W
R207	1-215-456-00	s	METAL 30K 1% 1/6W
R208	1-215-449-00	s	METAL 15K 1% 1/6W
R209	1-215-449-00	s	METAL 15K 1% 1/6W
R210	1-215-432-00	s	METAL 3K 1% 1/6W
R211	1-215-432-00	s	METAL 3K 1% 1/6W
#R213	1-215-452-00	s	METAL 20K 1% 1/6W
#R214	1-215-452-00	s	METAL 20K 1% 1/6W
R215	1-215-477-00	s	METAL 220K 1% 1/6W
#R216	1-215-452-00	s	METAL 20K 1% 1/6W
#R218	1-215-452-00	s	METAL 20K 1% 1/6W
#R219	1-215-452-00	s	METAL 20K 1% 1/6W
R220	1-215-477-00	s	METAL 220K 1% 1/6W
#R221	1-215-452-00	s	METAL 20K 1% 1/6W
R224	1-215-413-00	s	METAL 470 1% 1/6W
R227	1-215-449-00	s	METAL 15K 1% 1/6W
R228	1-215-452-00	s	METAL 20K 1% 1/6W
R231	1-215-416-00	s	METAL 620 1% 1/6W
R233	1-215-413-00	s	METAL 470 1% 1/6W
R236	1-215-449-00	s	METAL 15K 1% 1/6W
R237	1-215-452-00	s	METAL 20K 1% 1/6W
R240	1-215-416-00	s	METAL 620 1% 1/6W
R242	1-215-449-00	s	METAL 15K 1% 1/6W
R243	1-215-452-00	s	METAL 20K 1% 1/6W
R247	1-215-449-00	s	METAL 15K 1% 1/6W
R248	1-215-452-00	s	METAL 20K 1% 1/6W
R251	1-215-416-00	s	METAL 620 1% 1/6W
R252	1-215-416-00	s	METAL 620 1% 1/6W
R301	1-215-456-00	s	METAL 30K 1% 1/6W
R302	1-215-449-00	s	METAL 15K 1% 1/6W
R303	1-215-449-00	s	METAL 15K 1% 1/6W
R304	1-215-432-00	s	METAL 3K 1% 1/6W
R305	1-215-432-00	s	METAL 3K 1% 1/6W
R307	1-215-456-00	s	METAL 30K 1% 1/6W
R308	1-215-449-00	s	METAL 15K 1% 1/6W
R309	1-215-449-00	s	METAL 15K 1% 1/6W
R310	1-215-432-00	s	METAL 3K 1% 1/6W
R311	1-215-432-00	s	METAL 3K 1% 1/6W
R313	1-215-456-00	s	METAL 30K 1% 1/6W
R314	1-215-449-00	s	METAL 15K 1% 1/6W
R315	1-215-449-00	s	METAL 15K 1% 1/6W
R316	1-215-432-00	s	METAL 3K 1% 1/6W
R317	1-215-432-00	s	METAL 3K 1% 1/6W

NOTE 1:Please see page 6-25 for the parts that are not listd in the parts list.

(MOA-7 BOARD/CONSOLE)

Ref. No. or Q'ty	Part No.	SP	Description
R319	1-215-456-00	s	METAL 30K 1% 1/6W
R320	1-215-449-00	s	METAL 15K 1% 1/6W
R321	1-215-449-00	s	METAL 15K 1% 1/6W
R322	1-215-432-00	s	METAL 3K 1% 1/6W
R323	1-215-432-00	s	METAL 3K 1% 1/6W
R326	1-215-413-00	s	METAL 470 1% 1/6W
R329	1-215-449-00	s	METAL 15K 1% 1/6W
R330	1-215-452-00	s	METAL 20K 1% 1/6W
R333	1-215-416-00	s	METAL 620 1% 1/6W
R335	1-215-413-00	s	METAL 470 1% 1/6W
R338	1-215-449-00	s	METAL 15K 1% 1/6W
R339	1-215-452-00	s	METAL 20K 1% 1/6W
R342	1-215-416-00	s	METAL 620 1% 1/6W
#R401	1-215-452-00	s	METAL 20K 1% 1/6W
#R402	1-215-452-00	s	METAL 20K 1% 1/6W
#R403	1-215-441-00	s	METAL 6.8K 1% 1/6W
#R405	1-215-452-00	s	METAL 20K 1% 1/6W
R406	1-215-445-00	s	METAL 10K 1% 1/6W
R407	1-215-445-00	s	METAL 10K 1% 1/6W
#R409	1-215-452-00	s	METAL 20K 1% 1/6W
#R410	1-215-452-00	s	METAL 20K 1% 1/6W
#R411	1-215-441-00	s	METAL 6.8K 1% 1/6W
#R413	1-215-452-00	s	METAL 20K 1% 1/6W
R414	1-215-445-00	s	METAL 10K 1% 1/6W
R415	1-215-445-00	s	METAL 10K 1% 1/6W
R418	1-215-413-00	s	METAL 470 1% 1/6W
R419	1-215-437-00	s	METAL 4.7K 1% 1/6W
R420	1-215-447-00	s	METAL 12K 1% 1/6W
R421	1-260-083-11	s	CARBON 47 5% 1/2W
R423	1-215-413-00	s	METAL 470 1% 1/6W
R424	1-215-437-00	s	METAL 4.7K 1% 1/6W
R425	1-215-447-00	s	METAL 12K 1% 1/6W
R426	1-260-083-11	s	CARBON 47 5% 1/2W
R501	1-215-456-00	s	METAL 30K 1% 1/6W
R502	1-215-449-00	s	METAL 15K 1% 1/6W
R503	1-215-449-00	s	METAL 15K 1% 1/6W
R504	1-215-432-00	s	METAL 3K 1% 1/6W
R505	1-215-432-00	s	METAL 3K 1% 1/6W
R507	1-215-456-00	s	METAL 30K 1% 1/6W
R508	1-215-449-00	s	METAL 15K 1% 1/6W
R509	1-215-449-00	s	METAL 15K 1% 1/6W
R510	1-215-432-00	s	METAL 3K 1% 1/6W
R511	1-215-432-00	s	METAL 3K 1% 1/6W
R513	1-215-456-00	s	METAL 30K 1% 1/6W
R514	1-215-449-00	s	METAL 15K 1% 1/6W
R515	1-215-449-00	s	METAL 15K 1% 1/6W
R516	1-215-432-00	s	METAL 3K 1% 1/6W
R517	1-215-432-00	s	METAL 3K 1% 1/6W
R520	1-215-432-00	s	METAL 3K 1% 1/6W
R521	1-215-449-00	s	METAL 15K 1% 1/6W
R523	1-215-385-00	s	METAL 33 1% 1/6W
R524	1-215-456-00	s	METAL 30K 1% 1/6W
R525	1-215-449-00	s	METAL 15K 1% 1/6W
R526	1-215-449-00	s	METAL 15K 1% 1/6W
R527	1-215-432-00	s	METAL 3K 1% 1/6W
R528	1-215-432-00	s	METAL 3K 1% 1/6W
R531	1-215-432-00	s	METAL 3K 1% 1/6W
R532	1-215-449-00	s	METAL 15K 1% 1/6W
R534	1-215-385-00	s	METAL 33 1% 1/6W

NOTE 2:For the # marked in the following parts list, refer to section 7, Changed Parts.

(MOA-7 BOARD/CONSOLE)

Ref. No. or Q'ty	Part No.	SP	Description
R601	1-215-441-00	s	METAL 6.8K 1% 1/6W
R602	1-215-432-00	s	METAL 3K 1% 1/6W
R603	1-215-427-00	s	METAL 1.8K 1% 1/6W
R604	1-215-445-00	s	METAL 10K 1% 1/6W
R605	1-215-413-00	s	METAL 470 1% 1/6W
R606	1-215-480-00	s	METAL 300K 1% 1/6W
R607	1-215-385-00	s	METAL 33 1% 1/6W
R608	1-215-445-00	s	METAL 10K 1% 1/6W
R609	1-215-444-00	s	METAL 9.1K 1% 1/6W
R611	1-215-445-00	s	METAL 10K 1% 1/6W
R612	1-215-456-00	s	METAL 30K 1% 1/6W
R613	1-215-449-00	s	METAL 15K 1% 1/6W
R614	1-215-449-00	s	METAL 15K 1% 1/6W
R615	1-215-444-00	s	METAL 9.1K 1% 1/6W
R616	1-215-444-00	s	METAL 9.1K 1% 1/6W
R617	1-215-445-00	s	METAL 10K 1% 1/6W
R618	1-215-445-00	s	METAL 10K 1% 1/6W
R619	1-215-445-00	s	METAL 10K 1% 1/6W
R620	1-215-457-00	s	METAL 33K 1% 1/6W
R622	1-215-437-00	s	METAL 4.7K 1% 1/6W
R623	1-215-464-00	s	METAL 62K 1% 1/6W
R626	1-215-437-00	s	METAL 4.7K 1% 1/6W
R627	1-215-464-00	s	METAL 62K 1% 1/6W
R630	1-215-437-00	s	METAL 4.7K 1% 1/6W
R631	1-215-464-00	s	METAL 62K 1% 1/6W
R635	1-215-445-00	s	METAL 10K 1% 1/6W
R636	1-215-452-00	s	METAL 20K 1% 1/6W
R701	1-215-456-00	s	METAL 30K 1% 1/6W
R702	1-215-449-00	s	METAL 15K 1% 1/6W
R703	1-215-449-00	s	METAL 15K 1% 1/6W
R704	1-215-444-00	s	METAL 9.1K 1% 1/6W
R705	1-215-444-00	s	METAL 9.1K 1% 1/6W
R707	1-215-456-00	s	METAL 30K 1% 1/6W
R708	1-215-449-00	s	METAL 15K 1% 1/6W
R709	1-215-449-00	s	METAL 15K 1% 1/6W
R710	1-215-444-00	s	METAL 9.1K 1% 1/6W
R711	1-215-444-00	s	METAL 9.1K 1% 1/6W
#R714	1-215-445-00	s	METAL 10K 1% 1/6W
#R717	1-215-438-00	s	METAL 5.1K 1% 1/4W
R718	1-215-445-00	s	METAL 10K 1% 1/6W
R719	1-215-445-00	s	METAL 10K 1% 1/6W
R720	1-215-445-00	s	METAL 10K 1% 1/6W
R721	1-215-445-00	s	METAL 10K 1% 1/6W
R723	1-215-413-00	s	METAL 470 1% 1/6W
R727	1-215-445-00	s	METAL 10K 1% 1/6W
R728	1-215-452-00	s	METAL 20K 1% 1/6W
R729	1-215-452-00	s	METAL 20K 1% 1/6W
R730	1-215-445-00	s	METAL 10K 1% 1/6W
R732	1-215-445-00	s	METAL 10K 1% 1/6W
R733	1-215-457-00	s	METAL 33K 1% 1/6W
R736	1-215-445-00	s	METAL 10K 1% 1/6W
R737	1-215-445-00	s	METAL 10K 1% 1/6W
R738	1-215-433-00	s	METAL 3.3K 1% 1/6W
R739	1-215-445-00	s	METAL 10K 1% 1/6W
R740	1-260-070-11	s	CARBON 3.3 5% 1/2W
R741	1-260-070-11	s	CARBON 3.3 5% 1/2W
#R742	1-215-416-00	s	METAL 620 1% 1/6W
#R820	1-247-903-00	s	CARBON 1M 5% 1/4W

NOTE 1:Please see page 6-25 for the parts that are not listd in the parts list.

(MOA-7 BOARD/CONSOLE)

Ref. No. or Q'ty	Part No.	SP	Description
RB801	1-235-337-11	s	RESISTOR BLOCK 22KX8
RB802	1-235-337-11	s	RESISTOR BLOCK 22KX8
RB803	1-235-337-11	s	RESISTOR BLOCK 22KX8
RV101	1-230-752-11	s	RES, ADJ, CERMET 50K
RV102	1-230-752-11	s	RES, ADJ, CERMET 50K
RV201	1-230-752-11	s	RES, ADJ, CERMET 50K
RV202	1-230-752-11	s	RES, ADJ, CERMET 50K
RV203	1-230-752-11	s	RES, ADJ, CERMET 50K
RV204	1-230-752-11	s	RES, ADJ, CERMET 50K
RV301	1-230-752-11	s	RES, ADJ, CERMET 50K
RV302	1-230-752-11	s	RES, ADJ, CERMET 50K
RV401	1-237-516-21	s	RES, ADJ METAL 2K
RV402	1-237-516-21	s	RES, ADJ METAL 2K
RV501	1-237-516-21	s	RES, ADJ METAL 2K
RV502	1-237-516-21	s	RES, ADJ METAL 2K
RV601 to RV606	1-237-518-21	s	RES, ADJ METAL 10K
RV701 to RV705	1-237-518-21	s	RES, ADJ METAL 10K
RY101	1-515-716-11	s	RELAY (TQ2-5V)
RY102	1-515-716-11	s	RELAY (TQ2-5V)
RY103	1-515-716-11	s	RELAY (TQ2-5V)
RY104	1-515-716-11	s	RELAY (TQ2-5V)
RY201	1-515-716-11	s	RELAY (TQ2-5V)
RY202	1-515-716-11	s	RELAY (TQ2-5V)
RY203	1-515-716-11	s	RELAY (TQ2-5V)
RY204	1-515-716-11	s	RELAY (TQ2-5V)
RY301	1-515-716-11	s	RELAY (TQ2-5V)
RY302	1-515-716-11	s	RELAY (TQ2-5V)
RY701	1-515-716-11	s	RELAY (TQ2-5V)

NOTE 2:For the # marked in the following parts list, refer to section 7, Changed Parts.

PS-312 BOARD/CONSOLE

Ref. No. or Q'ty	Part No.	SP	Description
1pc	A-8275-421-A	o	MOUNTED CIRCUIT BOARD, PS-312
	3-184-523-02	o	SHEET, TR
	4-030-359-01	o	HEAT SINK, H. PIN
3pcs	7-682-560-04	s	SCREW +B 4X6
CN901	1-564-943-11	o	CONNECTOR, 12P, MALE
CN902	1-564-943-11	o	CONNECTOR, 12P, MALE
CN903 to CN908	1-506-599-11	o	PIN, CONNECTOR (B10P-VH) 10P
CN909	1-564-674-11	o	CONNECTOR, 8P, MALE
CN910 to CN915	1-564-241-00	o	CONNECTOR, 4P, MALE
CN916	1-695-965-11	o	HEADER (STRAIGHT) 10P
CN917	1-564-241-00	o	CONNECTOR, 4P, MALE
CN918	1-564-241-00	o	CONNECTOR, 4P, MALE
CN919	1-564-241-00	o	CONNECTOR, 4P, MALE
#D901	8-719-033-57	s	DIODE ESAE83-006
D902	8-719-920-40	s	DIODE ESAB82-004
D903	8-719-908-00	s	ESAC33-02CS
D904	8-719-901-90	s	DIODE ESAC33-02N
PH901	8-719-946-27	s	PHOTO COUPLER PC837
PH902	8-719-946-27	s	PHOTO COUPLER PC837
PH903	8-719-946-27	s	PHOTO COUPLER PC837
R901	1-260-093-11	s	CARBON 330 5% 1/2W
R902	1-260-099-11	s	CARBON 1K 5% 1/2W
R903	1-260-101-11	s	CARBON 1.5K 5% 1/2W
R904	1-260-101-11	s	CARBON 1.5K 5% 1/2W
R905	1-260-093-11	s	CARBON 330 5% 1/2W
R906	1-260-099-11	s	CARBON 1K 5% 1/2W
R907	1-260-101-11	s	CARBON 1.5K 5% 1/2W
R908	1-260-101-11	s	CARBON 1.5K 5% 1/2W

SW-604 BOARD/CONSOLE

Ref. No. or Q'ty	Part No.	SP	Description
1pc	A-8276-790-A	o	MOUNTED CIRCUIT BOARD, SW-604
8pcs	4-927-278-01	s	KEY TOP
CN111 to CN118	1-564-002-11	s	PIN, CONNECTOR 3P
CN119	1-560-807-00	o	HEADER 60P
S1 to S8	1-571-656-21	s	SWITCH, TACTIL

SW-605 BOARD/CONSOLE

Ref. No. or Q'ty	Part No.	SP	Description
1pc	A-8276-791-A	o	MOUNTED CIRCUIT BOARD, SW-605
CN121	1-695-249-11	o	HEADER (STRAIGHT) 50P
S1 to S8	1-572-609-11	s	SWITCH, PUSH (ILLUMINATION)
S9 to S16	1-572-609-21	s	SWITCH, PUSH (ILLUMINATION)

SW-606 BOARD/CONSOLE

Ref. No. or Q'ty	Part No.	SP	Description
1pc	A-8276-793-A	o	MOUNTED CIRCUIT BOARD, SW-606
1pc	1-952-717-11	o	HARNESS, SUB (MONI-SW2)
SW1	1-692-817-61	s	SWITCH, PUSH (ILLUMINATION)
SW2	1-692-817-51	s	SWITCH, PUSH (ILLUMINATION)
SW3	1-692-817-41	s	SWITCH, PUSH (ILLUMINATION)
SW4	1-692-817-31	s	SWITCH, PUSH (ILLUMINATION)
SW5	1-692-817-11	s	SWITCH, PUSH (ILLUMINATION)
SW6	1-692-817-21	s	SWITCH, PUSH (ILLUMINATION)
SW7	1-692-817-11	s	SWITCH, PUSH (ILLUMINATION)

NOTE 1:Please see page 6-25 for the parts that are not listd in the parts list.

NOTE 2:For the # marked in the following parts list, refer to section 7, Changed Parts.

VR-165 BOARD/CONSOLE

Ref. No. or Q'ty	Part No.	SP	Description
1pc	A-8276-792-A	o	MOUNTED CIRCUIT BOARD, VR-165
(This assembly includes the following parts, MIC board.)			
1pc	1-609-885-00	o	PRINTED CIRCUIT BOARD, MIC
1pc	1-944-634-11	s	HARNESS (TB MIC)
1pc	3-574-761-00	s	HOLDER, MICROPHONE
CN101	1-564-002-11	s	PIN, CONNECTOR 3P
CN613	1-564-013-11	o	PIN, CONNECTOR 3P
CN614	1-569-050-11	o	CONNECTOR, PS TYPE 34P, MALE
CN615	1-506-501-11	o	HEADER 20P
CN616	1-695-251-11	o	HEADER (RIGHT ANGLE TYPE) 20P
CN617	1-564-002-11	s	PIN, CONNECTOR 3P
CN618	1-564-013-31	s	PIN, CONNECTOR 3P
CN619	1-506-487-11	s	CONNECTOR 8P, MALE
ECM1	8-814-189-31	s	MICROPHONE, BUILT-IN (C-1007D)
RV1	1-223-546-11	s	RES, VAR CARBON 10K/10K
RV2	1-223-546-11	s	RES, VAR CARBON 10K/10K
RV3	1-223-546-11	s	RES, VAR CARBON 10K/10K
RV4	1-223-545-11	s	RES, VAR, CARBON 10KX4
RV5	1-223-546-11	s	RES, VAR CARBON 10K/10K

DMX-B4008/B4016 METER UNIT

IF-421 BOARD/METER UNIT

Ref. No. or Q'ty	Part No.	SP	Description
1pc	A-8275-422-A	o	MOUNTED CIRCUIT BOARD, IF-421
C113	1-102-963-00	s	CERAMIC 33PF 5% 50V
C114	1-102-963-00	s	CERAMIC 33PF 5% 50V
C115	1-163-038-00	s	CERAMIC, CHIP 0.1uF 25V
C116	1-126-157-11	s	ELECT 10uF 20% 16V
C117	1-163-038-00	s	CERAMIC, CHIP 0.1uF 25V
C207	1-126-935-11	s	ELECT 470uF 20% 16V
CN101	1-563-335-11	s	CONNECTOR, DIN 48P, FEMALE
CN111	1-564-411-11	o	PIN, CONNECTOR 50P
CN121	1-695-246-11	o	HEADER (STRAIGHT) 16P
CNI101	1-526-659-00	o	SOCKET, IC 28P
D201 to D212	8-719-911-19	s	DIODE 1SS119
D502	8-719-812-43	s	LED TLG124A, GRN
D503	8-719-812-43	s	LED TLG124A, GRN
D504	8-719-812-43	s	LED TLG124A, GRN
D505	8-719-812-43	s	LED TLG124A, GRN
FB201	1-236-163-11	s	ENCAPSULATED COMPONENT
IC101	8-759-275-01	o	IC 27C256B-MTLNK-V1.00
IC102	8-759-144-67	s	IC UPD43256AGU-12L
IC103	8-759-246-66	s	IC TMPZ84C015BF-6
IC104	8-759-926-07	s	IC SN74HC132NS
IC105	8-759-925-85	s	IC SN74HC32NS
IC106	8-759-926-11	s	IC SN74HC138NS
IC107	8-759-926-11	s	IC SN74HC138NS
IC108	8-759-925-82	s	IC SN74HC21NS
IC109	8-759-926-82	s	IC SN74HC574ANS
IC110	8-759-930-42	s	IC SN74LS145NS
IC111	8-759-926-82	s	IC SN74HC574ANS
IC112	8-759-926-82	s	IC SN74HC574ANS
IC113	8-759-989-91	s	IC TL7705ACPS
IC201	8-759-923-64	s	IC AM26LS32ACNS
IC202	8-759-994-41	s	IC CXD8025Q
IC203	8-759-994-41	s	IC CXD8025Q
IC204	8-759-926-77	s	IC SN74HC541NS
IC205	8-759-926-77	s	IC SN74HC541NS
IC206	1-467-544-11	s	CONVERTER, DC-DC
Q101 to Q110	8-729-804-87	s	TRANSISTOR 2SB1142-T
R101	1-249-425-11	s	CARBON 4.7K 5% 1/4W
R124	1-249-425-11	s	CARBON 4.7K 5% 1/4W
R201 to R209	1-249-406-11	s	CARBON 120 5% 1/4W
RB102	1-235-195-00	s	RESISTOR BLOCK 10KX8
RB103	1-235-332-11	s	RESISTOR BLOCK 470X8
RB501	1-235-195-00	s	RESISTOR BLOCK 10KX8
S101	1-554-937-11	s	SWITCH, PUSH
S102	1-570-623-11	s	SWITCH, DIP 8-CKT
X101	1-567-865-11	s	CRYSTAL, 12.00MHz

NOTE 1:Please see page 6-25 for the parts that are not listd in the parts list.

NOTE 2:For the # marked in the following parts list, refer to section 7, Changed Parts.

MT-88 BOARD/METER UNIT

Ref. No. or Q'ty	Part No.	SP	Description
1pc	A-8275-423-A	o	MOUNTED CIRCUIT BOARD, MT-88
2pcs	4-927-278-01	s	KEY TOP
CN301	1-506-750-11	o	CONNECTOR, DIN 48P, MALE
D301 to D306	8-719-027-26	s	DIODE HDSP-8825
D307 to D312	8-719-420-72	s	DIODE LN0603GP3
IC301	8-759-207-31	s	IC TC74HC4028F
IC302	8-759-207-31	s	IC TC74HC4028F
IC303	8-759-925-85	s	IC SN74HC32NS
IC304	8-759-051-53	s	IC TD62381F
IC305	8-759-051-53	s	IC TD62381F
IC306	8-759-051-53	s	IC TD62381F
IC307	8-759-207-31	s	IC TC74HC4028F
IC308	8-759-207-31	s	IC TC74HC4028F
IC309	8-759-925-85	s	IC SN74HC32NS
IC310	8-759-051-53	s	IC TD62381F
IC311	8-759-051-53	s	IC TD62381F
IC312	8-759-051-53	s	IC TD62381F
IC313	8-759-207-31	s	IC TC74HC4028F
IC314	8-759-207-31	s	IC TC74HC4028F
IC315	8-759-925-85	s	IC SN74HC32NS
IC316	8-759-051-53	s	IC TD62381F
IC317	8-759-051-53	s	IC TD62381F
IC318	8-759-051-53	s	IC TD62381F
R367 to R378	1-249-413-11	s	CARBON 470 5% 1/4W
R379	1-249-411-11	s	CARBON 330 5% 1/4W
R380	1-249-411-11	s	CARBON 330 5% 1/4W
S301	1-571-656-21	s	SWITCH, TACTIL
S302	1-571-656-21	s	SWITCH, TACTIL
S303	1-553-875-00	s	SWITCH, RUBBER

DMX-B4008 PROCESSOR

CN-833 BOARD/PROCESSOR

Ref. No. or Q'ty	Part No.	SP	Description
1pc	A-8275-410-A	o	MOUNTED CIRCUIT BOARD, CN-833
1pc	3-182-992-02	o	PANEL, CN-833
3pcs	7-682-947-01	s	SCREW +PSW 3X6
2pcs	7-685-546-14	s	SCREW +BTP 3X8 TYPE2 N-S
2pcs	3-172-089-01	o	HANDLE
4pcs	7-621-259-35	s	SCREW +P 2.6X5
C1	1-101-880-00	s	CERAMIC 47PF 5% 50V
C2	1-101-880-00	s	CERAMIC 47PF 5% 50V
C3	1-130-499-00	s	MYLAR 0.22uF 5% 50V
C4	1-130-499-00	s	MYLAR 0.22uF 5% 50V
C13	1-130-499-00	s	MYLAR 0.22uF 5% 50V
C14	1-130-499-00	s	MYLAR 0.22uF 5% 50V
C15	1-101-880-00	s	CERAMIC 47PF 5% 50V
C16	1-101-880-00	s	CERAMIC 47PF 5% 50V
C17	1-126-022-11	s	ELECT 47uF 20% 25V
C18	1-126-022-11	s	ELECT 47uF 20% 25V
CN1	1-506-748-11	s	CONNECTOR, DIN 96P, MALE
CN2	1-568-006-11	s	CONNECTOR, XLR 3P, FEMALE
CN3	1-568-005-11	s	CONNECTOR, XLR 3P, MALE
CN6	1-580-347-11	s	CONNECTOR, BNC, FEMALE
CN7	1-580-347-11	s	CONNECTOR, BNC, FEMALE
CN8	1-580-347-11	s	CONNECTOR, BNC, FEMALE
CN9	1-580-347-11	s	CONNECTOR, BNC, FEMALE
CN12	1-580-347-11	s	CONNECTOR, BNC, FEMALE
D1	8-719-911-19	s	DIODE 1SS119
D2	8-719-911-19	s	DIODE 1SS119
D3	8-719-911-19	s	DIODE 1SS119
D4	8-719-911-19	s	DIODE 1SS119
D13	8-719-911-19	s	DIODE 1SS119
D14	8-719-911-19	s	DIODE 1SS119
D15	8-719-911-19	s	DIODE 1SS119
D16	8-719-911-19	s	DIODE 1SS119
FIL1	1-236-163-11	s	ENCAPSULATED COMPONENT
FIL2	1-236-163-11	s	ENCAPSULATED COMPONENT
FIL3	1-236-163-11	s	ENCAPSULATED COMPONENT
FIL4	1-236-163-11	s	ENCAPSULATED COMPONENT
FIL101	1-236-071-11	s	ENCAPSULATED COMPONENT, LC
IC1	8-759-926-31	s	IC AM26LS31PC
IC2	8-759-916-20	s	IC SN74HC14AN
IC3	8-759-926-32	s	IC AM26LS32PC
R1	1-249-393-11	s	CARBON 10 5% 1/4W
R2	1-249-393-11	s	CARBON 10 5% 1/4W
R10	1-215-398-00	s	METAL 110 1% 1/6W
R13	1-249-429-11	s	CARBON 10K 5% 1/4W
R14	1-249-429-11	s	CARBON 10K 5% 1/4W
T1	1-437-194-21	s	TRANSFORMER, PULSE
T4	1-437-194-21	s	TRANSFORMER, PULSE

NOTE 1:Please see page 6-25 for the parts that are not listd in the parts list.

NOTE 2:For the # marked in the following parts list, refer to section 7, Changed Parts.

CN-834 BOARD/PROCESSOR

Ref. No. or Q'ty	Part No.	SP	Description
1pc	A-8275-411-A	o	MOUNTED CIRCUIT BOARD, CN-834
1pc	3-182-991-01	o	PANEL, CN-834
3pcs	7-682-947-01	s	SCREW +PSW 3X6
2pcs	7-685-546-14	s	SCREW +BTP 3X8 TYPE2 N-S
2pcs	3-172-089-01	o	HANDLE
4pcs	7-682-548-04	s	SCREW +B 3X8
16pcs	7-621-259-35	s	SCREW +P 2.6X5
C1	1-130-499-00	s	MYLAR 0.22uF 5% 50V
C2	1-130-499-00	s	MYLAR 0.22uF 5% 50V
C3	1-101-880-00	s	CERAMIC 47PF 5% 50V
C4	1-101-880-00	s	CERAMIC 47PF 5% 50V
C5	1-130-499-00	s	MYLAR 0.22uF 5% 50V
C6	1-130-499-00	s	MYLAR 0.22uF 5% 50V
C7	1-101-880-00	s	CERAMIC 47PF 5% 50V
C8	1-101-880-00	s	CERAMIC 47PF 5% 50V
C9	1-130-499-00	s	MYLAR 0.22uF 5% 50V
C10	1-130-499-00	s	MYLAR 0.22uF 5% 50V
C11	1-101-880-00	s	CERAMIC 47PF 5% 50V
C12	1-101-880-00	s	CERAMIC 47PF 5% 50V
C13	1-130-499-00	s	MYLAR 0.22uF 5% 50V
C14	1-130-499-00	s	MYLAR 0.22uF 5% 50V
C15	1-101-880-00	s	CERAMIC 47PF 5% 50V
C16	1-101-880-00	s	CERAMIC 47PF 5% 50V
C17	1-130-499-00	s	MYLAR 0.22uF 5% 50V
C18	1-130-499-00	s	MYLAR 0.22uF 5% 50V
C19	1-101-880-00	s	CERAMIC 47PF 5% 50V
C20	1-101-880-00	s	CERAMIC 47PF 5% 50V
C21	1-130-499-00	s	MYLAR 0.22uF 5% 50V
C22	1-130-499-00	s	MYLAR 0.22uF 5% 50V
C23	1-101-880-00	s	CERAMIC 47PF 5% 50V
C24	1-101-880-00	s	CERAMIC 47PF 5% 50V
C25	1-130-499-00	s	MYLAR 0.22uF 5% 50V
C26	1-130-499-00	s	MYLAR 0.22uF 5% 50V
C27	1-101-880-00	s	CERAMIC 47PF 5% 50V
C28	1-101-880-00	s	CERAMIC 47PF 5% 50V
C29	1-130-499-00	s	MYLAR 0.22uF 5% 50V
C30	1-130-499-00	s	MYLAR 0.22uF 5% 50V
C31	1-101-880-00	s	CERAMIC 47PF 5% 50V
C32	1-101-880-00	s	CERAMIC 47PF 5% 50V
C33	1-126-022-11	s	ELECT 47uF 20% 25V
C34	1-126-022-11	s	ELECT 47uF 20% 25V
C41	1-102-963-00	s	CERAMIC 33PF 5% 50V
C42	1-136-165-00	s	FILM 0.1uF 5% 50V
C43	1-124-584-00	s	ELECT 100uF 20% 10V
CN1	1-506-748-11	s	CONNECTOR, DIN 96P, MALE
CN2 to CN9	1-568-006-11	s	CONNECTOR, XLR 3P, FEMALE
CN10	1-563-771-11	s	CONNECTOR, D-SUB 15P, FEMALE
CN11	1-563-772-11	o	CONNECTOR, D-SUB 25P, FEMALE
D1 to D34	8-719-911-19	s	DIODE 1SS119
FIL1 to FIL32	1-236-163-11	s	ENCAPSULATED COMPONENT
FIL101	1-236-071-11	s	ENCAPSULATED COMPONENT, LC
FIL102	1-236-071-11	s	ENCAPSULATED COMPONENT, LC

NOTE 1:Please see page 6-25 for the parts that are not listd in the parts list.

(CN-834 BOARD/PROCESSOR)

Ref. No. or Q'ty	Part No.	SP	Description
IC1	8-759-926-32	s	IC AM26LS32PC
IC2	8-759-926-32	s	IC AM26LS32PC
IC3	8-759-921-99	s	IC SN74HCT541N
IC4	8-759-951-24	s	IC SN75124N
IC5	8-759-951-23	s	IC SN75123N
IC6	8-759-916-20	s	IC SN74HC14AN
Q1	8-729-900-37	s	TRANSISTOR DTC124EF
R1	1-215-398-00	s	METAL 110 1% 1/6W
R4	1-215-398-00	s	METAL 110 1% 1/6W
R7	1-215-398-00	s	METAL 110 1% 1/6W
R10	1-215-398-00	s	METAL 110 1% 1/6W
R13	1-215-398-00	s	METAL 110 1% 1/6W
R16	1-215-398-00	s	METAL 110 1% 1/6W
R19	1-215-398-00	s	METAL 110 1% 1/6W
R22	1-215-398-00	s	METAL 110 1% 1/6W
R25 to R40	1-249-429-11	s	CARBON 10K 5% 1/4W
R41	1-215-394-00	s	METAL 75 1% 1/6W
R43	1-249-425-11	s	CARBON 4.7K 5% 1/4W
R44	1-215-398-00	s	METAL 110 1% 1/6W
T1 to T8	1-437-194-21	s	TRANSFORMER, PULSE

NOTE 2:For the # marked in the following parts list, refer to section 7, Changed Parts.

CN-835 BOARD/PROCESSOR

Ref. No. or Q'ty	Part No.	SP	Description
1pc	A-8275-412-A	o	MOUNTED CIRCUIT BOARD, CN-835
1pc	3-182-990-01	o	PANEL, CN-835
3pcs	7-682-947-01	s	SCREW +PSW 3X6
2pcs	7-685-546-14	s	SCREW +BTP 3X8 TYPE2 N-S
2pcs	3-172-089-01	o	HANDLE
16pcs	7-621-259-35	s	SCREW +P 2.6X5
C1	1-130-499-00	s	MYLAR 0.22uF 5% 50V
C2	1-130-499-00	s	MYLAR 0.22uF 5% 50V
C3	1-101-880-00	s	CERAMIC 47PF 5% 50V
C4	1-101-880-00	s	CERAMIC 47PF 5% 50V
C5	1-130-499-00	s	MYLAR 0.22uF 5% 50V
C6	1-130-499-00	s	MYLAR 0.22uF 5% 50V
C7	1-101-880-00	s	CERAMIC 47PF 5% 50V
C8	1-101-880-00	s	CERAMIC 47PF 5% 50V
C9	1-130-499-00	s	MYLAR 0.22uF 5% 50V
C10	1-130-499-00	s	MYLAR 0.22uF 5% 50V
C11	1-101-880-00	s	CERAMIC 47PF 5% 50V
C12	1-101-880-00	s	CERAMIC 47PF 5% 50V
C13	1-130-499-00	s	MYLAR 0.22uF 5% 50V
C14	1-130-499-00	s	MYLAR 0.22uF 5% 50V
C15	1-101-880-00	s	CERAMIC 47PF 5% 50V
C16	1-101-880-00	s	CERAMIC 47PF 5% 50V
C17	1-130-499-00	s	MYLAR 0.22uF 5% 50V
C18	1-130-499-00	s	MYLAR 0.22uF 5% 50V
C19	1-101-880-00	s	CERAMIC 47PF 5% 50V
C20	1-101-880-00	s	CERAMIC 47PF 5% 50V
C21	1-130-499-00	s	MYLAR 0.22uF 5% 50V
C22	1-130-499-00	s	MYLAR 0.22uF 5% 50V
C23	1-101-880-00	s	CERAMIC 47PF 5% 50V
C24	1-101-880-00	s	CERAMIC 47PF 5% 50V
C25	1-130-499-00	s	MYLAR 0.22uF 5% 50V
C26	1-130-499-00	s	MYLAR 0.22uF 5% 50V
C27	1-101-880-00	s	CERAMIC 47PF 5% 50V
C28	1-101-880-00	s	CERAMIC 47PF 5% 50V
C29	1-130-499-00	s	MYLAR 0.22uF 5% 50V
C30	1-130-499-00	s	MYLAR 0.22uF 5% 50V
C31	1-101-880-00	s	CERAMIC 47PF 5% 50V
C32	1-101-880-00	s	CERAMIC 47PF 5% 50V
C33	1-126-022-11	s	ELECT 47uF 20% 25V
C34	1-126-022-11	s	ELECT 47uF 20% 25V
CN1	1-506-748-11	s	CONNECTOR, DIN 96P, MALE
CN2 to CN9	1-568-006-11	s	CONNECTOR, XLR 3P, FEMALE
D1 to D32	8-719-911-19	s	DIODE 1SS119
FIL1 to FL16	1-236-163-11	s	ENCAPSULATED COMPONENT
FIL101	1-236-071-11	s	ENCAPSULATED COMPONENT, LC
IC1	8-759-926-32	s	IC AM26LS32PC
IC2	8-759-926-32	s	IC AM26LS32PC
IC3	8-759-921-99	s	IC SN74HCT541N
R1	1-215-398-00	s	METAL 110 1% 1/6W
R4	1-215-398-00	s	METAL 110 1% 1/6W
R7	1-215-398-00	s	METAL 110 1% 1/6W
R10	1-215-398-00	s	METAL 110 1% 1/6W
R13	1-215-398-00	s	METAL 110 1% 1/6W

NOTE 1:Please see page 6-25 for the parts that are not listd in the parts list.

(CN-835 BOARD/PROCESSOR)

Ref. No. or Q'ty	Part No.	SP	Description
R16	1-215-398-00	s	METAL 110 1% 1/6W
R19	1-215-398-00	s	METAL 110 1% 1/6W
R22	1-215-398-00	s	METAL 110 1% 1/6W
R25 to R40	1-249-429-11	s	CARBON 10K 5% 1/4W
T1 to T8	1-437-194-21	s	TRANSFORMER, PULSE

NOTE 2:For the # marked in the following parts list, refer to section 7, Changed Parts.

CN-836 BOARD/PROCESSOR

Ref. No. or Q'ty	Part No.	SP	Description
1pc	A-8275-413-A	o	MOUNTED CIRCUIT BOARD, CN-836
1pc	3-182-990-11	o	PANEL, CN-836
3pcs	7-682-947-01	s	SCREW +PSW 3X6
2pcs	7-685-546-14	s	SCREW +BTP 3X8 TYPE2 N-S
2pcs	3-172-089-01	o	HANDLE
16pcs	7-621-259-35	s	SCREW +P 2.6X5
C1	1-101-880-00	s	CERAMIC 47PF 5% 50V
C2	1-101-880-00	s	CERAMIC 47PF 5% 50V
C3	1-130-499-00	s	MYLAR 0.22uF 5% 50V
C4	1-130-499-00	s	MYLAR 0.22uF 5% 50V
C5	1-101-880-00	s	CERAMIC 47PF 5% 50V
C6	1-101-880-00	s	CERAMIC 47PF 5% 50V
C7	1-130-499-00	s	MYLAR 0.22uF 5% 50V
C8	1-130-499-00	s	MYLAR 0.22uF 5% 50V
C9	1-101-880-00	s	CERAMIC 47PF 5% 50V
C10	1-101-880-00	s	CERAMIC 47PF 5% 50V
C11	1-130-499-00	s	MYLAR 0.22uF 5% 50V
C12	1-130-499-00	s	MYLAR 0.22uF 5% 50V
C13	1-101-880-00	s	CERAMIC 47PF 5% 50V
C14	1-101-880-00	s	CERAMIC 47PF 5% 50V
C15	1-130-499-00	s	MYLAR 0.22uF 5% 50V
C16	1-130-499-00	s	MYLAR 0.22uF 5% 50V
C17	1-101-880-00	s	CERAMIC 47PF 5% 50V
C18	1-101-880-00	s	CERAMIC 47PF 5% 50V
C19	1-130-499-00	s	MYLAR 0.22uF 5% 50V
C20	1-130-499-00	s	MYLAR 0.22uF 5% 50V
C21	1-101-880-00	s	CERAMIC 47PF 5% 50V
C22	1-101-880-00	s	CERAMIC 47PF 5% 50V
C23	1-130-499-00	s	MYLAR 0.22uF 5% 50V
C24	1-130-499-00	s	MYLAR 0.22uF 5% 50V
C25	1-101-880-00	s	CERAMIC 47PF 5% 50V
C26	1-101-880-00	s	CERAMIC 47PF 5% 50V
C27	1-130-499-00	s	MYLAR 0.22uF 5% 50V
C28	1-130-499-00	s	MYLAR 0.22uF 5% 50V
C29	1-101-880-00	s	CERAMIC 47PF 5% 50V
C30	1-101-880-00	s	CERAMIC 47PF 5% 50V
C31	1-130-499-00	s	MYLAR 0.22uF 5% 50V
C32	1-130-499-00	s	MYLAR 0.22uF 5% 50V
C33	1-126-022-11	s	ELECT 47uF 20% 25V
C34	1-126-022-11	s	ELECT 47uF 20% 25V
CN1	1-506-748-11	s	CONNECTOR, DIN 96P, MALE
CN2 to CN9	1-568-005-11	s	CONNECTOR, XLR 3P, MALE
CN10	1-564-948-21	o	PIN, SHORTING
COP10	1-562-579-21	s	PLUG, SHORTING
D1 to D32	8-719-911-19	s	DIODE 1SS119
FIL1 to FIL16	1-236-163-11	s	ENCAPSULATED COMPONENT
FIL101	1-236-071-11	s	ENCAPSULATED COMPONENT, LC
IC1	8-759-926-31	s	IC AM26LS31PC
IC2	8-759-926-31	s	IC AM26LS31PC
IC3	8-759-916-20	s	IC SN74HC14AN
R1 to R16	1-249-393-11	s	CARBON 10 5% 1/4W

(CN-836 BOARD/PROCESSOR)

Ref. No. or Q'ty	Part No.	SP	Description
T1 to T8	1-437-194-21	s	TRANSFORMER, PULSE

NOTE 1:Please see page 6-25 for the parts that are not listd in the parts list.

NOTE 2:For the # marked in the following parts list, refer to section 7, Changed Parts.

CN-837 BOARD/PROCESSOR

Ref. No. or Q'ty	Part No.	SP	Description
1pc	A-8275-419-A	o	MOUNTED CIRCUIT BOARD, CN-837
1pc	3-182-989-02	o	PANEL, CN-837
3pcs	7-682-947-01	s	SCREW +PSW 3X6
2pcs	7-685-546-14	s	SCREW +BTP 3X8 TYPE2 N-S
2pcs	3-172-089-01	o	HANDLE
2pcs	7-682-548-04	s	SCREW +B 3X8
6pcs	7-621-259-35	s	SCREW +P 2.6X5
C1	1-101-880-00	s	CERAMIC 47PF 5% 50V
C2	1-101-880-00	s	CERAMIC 47PF 5% 50V
C3	1-130-499-00	s	MYLAR 0.22uF 5% 50V
C4	1-130-499-00	s	MYLAR 0.22uF 5% 50V
C5	1-101-880-00	s	CERAMIC 47PF 5% 50V
C6	1-101-880-00	s	CERAMIC 47PF 5% 50V
C7	1-130-499-00	s	MYLAR 0.22uF 5% 50V
C8	1-130-499-00	s	MYLAR 0.22uF 5% 50V
C9	1-101-880-00	s	CERAMIC 47PF 5% 50V
C10	1-101-880-00	s	CERAMIC 47PF 5% 50V
C11	1-130-499-00	s	MYLAR 0.22uF 5% 50V
C12	1-130-499-00	s	MYLAR 0.22uF 5% 50V
C23	1-126-933-11	s	ELECT 100uF 20% 16V
C25	1-124-584-00	s	ELECT 100uF 20% 10V
C27	1-126-022-11	s	ELECT 47uF 20% 25V
C29	1-126-022-11	s	ELECT 47uF 20% 25V
C31	1-126-022-11	s	ELECT 47uF 20% 25V
C32	1-126-022-11	s	ELECT 47uF 20% 25V
C41	1-124-584-00	s	ELECT 100uF 20% 10V
C42	1-102-973-00	s	CERAMIC 100PF 5% 50V
C43	1-102-973-00	s	CERAMIC 100PF 5% 50V
C44	1-126-096-11	s	ELECT 10uF 20% 35V
C45	1-102-963-00	s	CERAMIC 33PF 5% 50V
C46	1-130-477-00	s	MYLAR 0.0033uF 5% 50V
C47	1-130-477-00	s	MYLAR 0.0033uF 5% 50V
C48	1-130-477-00	s	MYLAR 0.0033uF 5% 50V
C49	1-126-941-11	s	ELECT 470uF 20% 25V
C50	1-126-941-11	s	ELECT 470uF 20% 25V
C51	1-124-584-00	s	ELECT 100uF 20% 10V
C52	1-102-973-00	s	CERAMIC 100PF 5% 50V
C53	1-102-973-00	s	CERAMIC 100PF 5% 50V
C54	1-126-096-11	s	ELECT 10uF 20% 35V
C55	1-102-963-00	s	CERAMIC 33PF 5% 50V
C56	1-130-477-00	s	MYLAR 0.0033uF 5% 50V
C57	1-130-477-00	s	MYLAR 0.0033uF 5% 50V
C58	1-130-477-00	s	MYLAR 0.0033uF 5% 50V
C59	1-126-941-11	s	ELECT 470uF 20% 25V
C60	1-126-941-11	s	ELECT 470uF 20% 25V
C101	1-126-022-11	s	ELECT 47uF 20% 25V
C102	1-126-022-11	s	ELECT 47uF 20% 25V
C121	1-126-948-11	s	ELECT 100uF 20% 35V
C122	1-126-948-11	s	ELECT 100uF 20% 35V
CN1	1-506-748-11	s	CONNECTOR, DIN 96P, MALE
CN2	1-568-005-11	s	CONNECTOR, XLR 3P, MALE
CN3	1-568-005-11	s	CONNECTOR, XLR 3P, MALE
CN4	1-568-005-11	s	CONNECTOR, XLR 3P, MALE
CN5	1-563-773-11	s	CONNECTOR, D-SUB 37P, FEMALE
D1 to D12	8-719-911-19	s	DIODE 1SS119
FIL1 to FIL18	1-236-163-11	s	ENCAPSULATED COMPONENT

NOTE 1:Please see page 6-25 for the parts that are not listd in the parts list.

(CN-837 BOARD/PROCESSOR)

Ref. No. or Q'ty	Part No.	SP	Description
FIL101	1-236-071-11	s	ENCAPSULATED COMPONENT, LC
FIL102	1-236-071-11	s	ENCAPSULATED COMPONENT, LC
FIL103	1-236-071-11	s	ENCAPSULATED COMPONENT, LC
IC1	8-759-916-20	s	IC SN74HC14AN
IC2	8-759-926-31	s	IC AM26LS31PC
IC3	8-759-917-05	s	IC SN74HC541AN
IC4	8-759-980-05	s	IC 74AC08PC
IC5	8-759-999-32	s	IC SM5813APT
IC6	8-759-158-87	s	IC PCM69AP
IC7	8-759-109-82	s	IC UPC814C
IC8	8-759-900-72	s	IC NE5532P
IC9	8-759-900-72	s	IC NE5532P
IC10	8-759-900-72	s	IC NE5532P
IC11	8-759-900-72	s	IC NE5532P
IC12	1-808-838-11	s	HIC TAA-1S
IC13	1-808-838-11	s	HIC TAA-1S
IC14	8-759-708-05	s	IC NJM78L05A
R1 to R6	1-249-393-11	s	CARBON 10 5% 1/4W
R7	1-215-423-00	s	METAL 1.2K 1% 1/6W
R8	1-215-407-00	s	METAL 270 1% 1/6W
R9	1-215-423-00	s	METAL 1.2K 1% 1/6W
R10	1-215-407-00	s	METAL 270 1% 1/6W
R11	1-215-423-00	s	METAL 1.2K 1% 1/6W
R12	1-215-415-00	s	METAL 560 1% 1/6W
R13	1-215-437-00	s	METAL 4.7K 1% 1/6W
R14	1-215-437-00	s	METAL 4.7K 1% 1/6W
R15	1-215-423-00	s	METAL 1.2K 1% 1/6W
R16	1-215-423-00	s	METAL 1.2K 1% 1/6W
R17	1-215-423-00	s	METAL 1.2K 1% 1/6W
R18	1-215-423-00	s	METAL 1.2K 1% 1/6W
R19	1-215-437-00	s	METAL 4.7K 1% 1/6W
R20	1-249-441-11	s	CARBON 100K 5% 1/4W
R21	1-215-397-00	s	METAL 100 1% 1/6W
R22	1-215-433-00	s	METAL 3.3K 1% 1/6W
R23	1-215-445-00	s	METAL 10K 1% 1/6W
R24	1-214-842-00	s	METAL 120 1% 1/2W
R25	1-214-842-00	s	METAL 120 1% 1/2W
R26	1-249-441-11	s	CARBON 100K 5% 1/4W
R27	1-249-441-11	s	CARBON 100K 5% 1/4W
R28	1-215-439-00	s	METAL 5.6K 1% 1/6W
R31	1-215-423-00	s	METAL 1.2K 1% 1/6W
R32	1-215-415-00	s	METAL 560 1% 1/6W
R33	1-215-437-00	s	METAL 4.7K 1% 1/6W
R34	1-215-437-00	s	METAL 4.7K 1% 1/6W
R35	1-215-423-00	s	METAL 1.2K 1% 1/6W
R36	1-215-423-00	s	METAL 1.2K 1% 1/6W
R37	1-215-423-00	s	METAL 1.2K 1% 1/6W
R38	1-215-423-00	s	METAL 1.2K 1% 1/6W
R39	1-215-437-00	s	METAL 4.7K 1% 1/6W
R40	1-249-441-11	s	CARBON 100K 5% 1/4W
R41	1-215-397-00	s	METAL 100 1% 1/6W
R42	1-215-433-00	s	METAL 3.3K 1% 1/6W
R43	1-215-445-00	s	METAL 10K 1% 1/6W
R44	1-214-842-00	s	METAL 120 1% 1/2W
R45	1-214-842-00	s	METAL 120 1% 1/2W
R46	1-249-441-11	s	CARBON 100K 5% 1/4W

NOTE 2:For the # marked in the following parts list, refer to section 7, Changed Parts.

(CN-837 BOARD/PROCESSOR)

Ref. No. or Q'ty	Part No.	SP	Description
R47	1-249-441-11	s	CARBON 100K 5% 1/4W
R48	1-215-439-00	s	METAL 5.6K 1% 1/6W
R49	1-249-411-11	s	CARBON 330 5% 1/4W
RB1	1-231-509-00	s	RESISTOR BLOCK 1Kx4
RB2	1-235-192-00	s	RESISTOR BLOCK 1KX8
RV1	1-230-749-21	s	RES, ADJ, CERMET 5K
RV2	1-230-749-21	s	RES, ADJ, CERMET 5K
T1	1-437-194-21	s	TRANSFORMER, PULSE
T2	1-437-194-21	s	TRANSFORMER, PULSE
T3	1-437-194-21	s	TRANSFORMER, PULSE

NOTE 1:Please see page 6-25 for the parts that are not listd in the parts list.

CPU-164 BOARD/PROCESSOR

Ref. No. or Q'ty	Part No.	SP	Description
1pc	A-8275-407-A	o	MOUNTED CIRCUIT BOARD, CPU-164
2pcs	2-146-577-01	o	LEVER (1), PC BOARD
2pcs	3-174-923-01	o	LEVER (2), PC BOARD
4pcs	7-626-320-11	s	PIN, SPRING 3X8
4pcs	7-685-546-14	s	SCREW +BTP 3X8 TYPE2 N-S
7pcs	7-682-903-01	s	SCREW +PWH 3X5
1pc	3-177-060-02	o	PLATE, SHIELD, PC BOARD
1pc	7-623-954-21	s	WASHER 3.0, FIBER
C1 to C8	1-102-959-00	s	CERAMIC 22PF 5% 50V
C9	1-126-163-11	s	ELECT 4.7uF 20% 50V
C10	1-126-163-11	s	ELECT 4.7uF 20% 50V
C11	1-126-163-11	s	ELECT 4.7uF 20% 50V
C12	1-126-163-11	s	ELECT 4.7uF 20% 50V
C14	1-126-157-11	s	ELECT 10uF 20% 16V
C201	1-125-447-11	s	DOUBLE LAYERS 1FARAD 5.5V
C309	1-126-163-11	s	ELECT 4.7uF 20% 50V
C310	1-126-163-11	s	ELECT 4.7uF 20% 50V
C311	1-126-163-11	s	ELECT 4.7uF 20% 50V
C312	1-126-163-11	s	ELECT 4.7uF 20% 50V
C314	1-126-157-11	s	ELECT 10uF 20% 16V
C701	1-126-157-11	s	ELECT 10uF 20% 16V
C702	1-131-368-00	s	TANTALUM 3.3uF 10% 16V
C704	1-164-085-11	s	CERAMIC 0.001uF 10% 50V
C705	1-130-495-00	s	MYLAR 0.1uF 5% 50V
C706	1-124-584-00	s	ELECT 100uF 20% 10V
C712	1-102-963-00	s	CERAMIC 33PF 5% 50V
C721	1-126-786-11	s	ELECT 47uF 20% 16V
C723	1-126-786-11	s	ELECT 47uF 20% 16V
C725	1-126-786-11	s	ELECT 47uF 20% 16V
C727	1-126-786-11	s	ELECT 47uF 20% 16V
C728	1-124-584-00	s	ELECT 100uF 20% 10V
C732	1-124-584-00	s	ELECT 100uF 20% 10V
C756	1-136-165-00	s	FILM 0.1uF 5% 50V
C757	1-136-165-00	s	FILM 0.1uF 5% 50V
C762	1-126-160-11	s	ELECT 1uF 20% 50V
C765	1-126-789-11	s	ELECT 33uF 20% 25V
C766	1-136-165-00	s	FILM 0.1uF 5% 50V
C767	1-106-343-00	s	FILM 0.001uF 5% 200V
C768	1-136-355-11	s	FILM 330PF 5% 100V
C770	1-102-963-00	s	CERAMIC 33PF 5% 50V
C771	1-102-963-00	s	CERAMIC 33PF 5% 50V
C772	1-102-963-00	s	CERAMIC 33PF 5% 50V
C773	1-162-765-11	s	CERAMIC 0.001uF 5% 50V
C774	1-162-765-11	s	CERAMIC 0.001uF 5% 50V
C775	1-162-765-11	s	CERAMIC 0.001uF 5% 50V
C786	1-130-469-00	s	FILM 680PF 5% 50V
C790	1-126-160-11	s	ELECT 1uF 20% 50V
C797	1-101-880-00	s	CERAMIC 47PF 5% 50V
CN1	1-506-748-11	s	CONNECTOR, DIN 96P, MALE
CN2	1-506-748-11	s	CONNECTOR, DIN 96P, MALE
CN3	1-563-890-21	s	CONNECTOR, D-SUB 9P, FEMALE
CN4	1-563-890-21	s	CONNECTOR, D-SUB 9P, FEMALE
CN5	1-563-890-21	s	CONNECTOR, D-SUB 9P, FEMALE
CN6	1-563-890-21	s	CONNECTOR, D-SUB 9P, FEMALE
CN7	1-564-009-11	o	PIN, CONNECTOR 10P
CNI107	1-526-816-21	s	SOCKET, IC (DP) 24P

NOTE 2:For the # marked in the following parts list, refer to section 7, Changed Parts.

(CPU-164 BOARD/PROCESSOR)

Ref. No. or Q'ty	Part No.	SP	Description
CNI201	1-526-662-21	o	SOCKET, IC (DP) 40P
CNI202	1-526-662-21	o	SOCKET, IC (DP) 40P
CNI307	1-526-816-21	s	SOCKET, IC (DP) 24P
CNI310	1-526-656-00	s	SOCKET, IC (DP) 20P
CNI401	1-526-662-21	o	SOCKET, IC (DP) 40P
CNI402	1-526-662-21	o	SOCKET, IC (DP) 40P
CNI503	1-526-656-00	s	SOCKET, IC (DP) 20P
CNI751	1-526-656-00	s	SOCKET, IC (DP) 20P
D32	8-719-911-19	s	DIODE 1SS119
D101	8-719-812-31	s	LED TLR123, RED
D103 to D108	8-719-812-43	s	LED TLG124A, GRN
D201	8-719-987-87	s	DIODE ERA85-009
D301	8-719-812-31	s	LED TLR123, RED
D303 to D308	8-719-812-43	s	LED TLG124A, GRN
D501	8-719-812-43	s	LED TLG124A, GRN
D502	8-719-812-43	s	LED TLG124A, GRN
D503	8-719-812-43	s	LED TLG124A, GRN
D505	8-719-812-43	s	LED TLG124A, GRN
D705	8-719-911-19	s	DIODE 1SS119
D706	8-719-911-19	s	DIODE 1SS119
D719	8-719-109-85	s	DIODE RD5.1ES-B2
D720	8-719-911-19	s	DIODE 1SS119
D721	8-719-911-19	s	DIODE 1SS119
D722	8-719-915-30	s	DIODE, VARICAP FC53M
D723	8-719-915-30	s	DIODE, VARICAP FC53M
D724	8-719-915-30	s	DIODE, VARICAP FC53M
#D725	8-719-911-19	s	DIODE 1SS119
DB1	8-759-939-39	s	IC DAN801
DB2	8-759-939-38	s	IC DAP801
IC101	8-759-194-86	s	IC MC68302FC16C
IC102	8-759-008-57	s	IC MC34051P
IC103	8-759-972-58	s	IC MAX238CNG
IC104	8-759-244-11	s	IC TC74AC175P
IC105	8-759-921-21	s	IC SN74HC163N
IC106	8-759-921-21	s	IC SN74HC163N
IC107	8-759-079-16	o	IC GAL22V10-CPUDEC-V1.0
IC108	8-759-917-05	s	IC SN74HC541AN
IC109	8-759-004-72	s	IC MC74HC259N
IC110	8-759-904-83	s	IC 74F32PC
IC111	8-759-904-80	s	IC 74F04PC
IC112	8-759-239-91	s	IC TC74HC07AP
IC113	8-759-916-20	s	IC SN74HC14AN
IC114	8-759-939-36	s	IC TL7705ACP
IC115	8-759-916-12	s	IC SN74HC00N
IC201	8-759-275-03	o	IC 27C210A-EODBG-V1.00
IC202	8-759-275-05	o	IC 27C210A-DSPHOST-V1.00
IC203	8-752-365-27	s	IC CXK581000AH-70LL-TL
IC204	8-752-365-27	s	IC CXK581000AH-70LL-TL
IC205	8-752-365-27	s	IC CXK581000AH-70LL-TL
IC206	8-752-365-27	s	IC CXK581000AH-70LL-TL
IC207	8-759-982-65	s	IC ICL7665SCPA
IC301	8-759-194-86	s	IC MC68302FC16C
IC302	8-759-904-83	s	IC 74F32PC
IC303	8-759-972-58	s	IC MAX238CNG
IC308	8-759-917-05	s	IC SN74HC541AN

NOTE 1:Please see page 6-25 for the parts that are not listd in the parts list.

(CPU-164 BOARD/PROCESSOR)

Ref. No. or Q'ty	Part No.	SP	Description
IC309	8-759-004-72	s	IC MC74HC259N
IC310	8-759-079-07	s	IC GAL16V8B-DSPBUS-V1.0
IC311	8-759-904-80	s	IC 74F04PC
IC312	8-759-239-91	s	IC TC74HC07AP
IC313	8-759-916-20	s	IC SN74HC14AN
IC314	8-759-939-36	s	IC TL7705ACP
IC315	8-759-916-12	s	IC SN74HC00N
IC401	8-759-275-07	o	IC 27C4002-DSPAPLC-V1.00
IC403	8-752-365-27	s	IC CXK581000AH-70LL-TL
IC404	8-752-365-27	s	IC CXK581000AH-70LL-TL
IC405	8-752-365-27	s	IC CXK581000AH-70LL-TL
IC406	8-752-365-27	s	IC CXK581000AH-70LL-TL
IC501	8-759-973-43	s	IC MB8421-90LPFQ
IC502	8-759-973-43	s	IC MB8421-90LPFQ
IC503	8-759-079-09	o	IC GAL16V8B-DSPIO-V1.0
IC504	8-759-917-05	s	IC SN74HC541AN
IC505	8-759-917-05	s	IC SN74HC541AN
IC506	8-759-917-05	s	IC SN74HC541AN
IC507	8-759-917-05	s	IC SN74HC541AN
IC508	8-759-917-06	s	IC SN74HC574N
IC509	8-759-917-06	s	IC SN74HC574N
IC510	8-759-917-05	s	IC SN74HC541AN
IC511	8-759-917-05	s	IC SN74HC541AN
IC512	8-759-917-05	s	IC SN74HC541AN
IC513	8-759-921-34	s	IC SN74HC245N
IC514	8-759-921-34	s	IC SN74HC245N
IC515	8-759-917-05	s	IC SN74HC541AN
IC516	8-759-917-05	s	IC SN74HC541AN
IC517	8-759-917-05	s	IC SN74HC541AN
IC701	8-759-916-12	s	IC SN74HC00N
IC710	8-759-990-84	s	IC TL084CN
IC711	8-759-503-91	s	IC TL082CP
IC712	8-759-503-91	s	IC TL082CP
IC722	8-759-231-58	s	IC M5F7812L
IC723	8-759-701-88	s	IC NJM7912FA
IC731	8-759-951-24	s	IC SN75124N
IC737	8-759-916-12	s	IC SN74HC00N
IC739	8-759-203-39	s	IC TC74HC390P
IC740	8-759-032-81	s	IC MC74HC74N
IC741	8-759-239-47	s	IC TC74HC123AP
IC742	8-759-239-47	s	IC TC74HC123AP
IC749	8-759-972-26	s	IC LM1881N
IC751	8-759-247-73	o	IC GAL16V8B-VPLLB-V1.0
IC760	8-759-916-18	s	IC SN74HC10N
IC761	8-759-921-21	s	IC SN74HC163N
IC762	8-759-921-21	s	IC SN74HC163N
IC781	8-759-200-11	s	IC TC4011UBP
IC782	8-759-200-11	s	IC TC4011UBP
IC783	8-759-916-14	s	IC SN74HC04N
IC785	8-759-032-81	s	IC MC74HC74N
JW401	1-535-303-00	o	WIRE, JUMPER
JW402	1-535-303-00	o	WIRE, JUMPER
LPF1	1-424-008-11	s	FILTER, NOISE (SIGNAL LINE)
LPF2	1-424-008-11	s	FILTER, NOISE (SIGNAL LINE)
LPF3	1-424-008-11	s	FILTER, NOISE (SIGNAL LINE)
Q11	8-729-178-55	s	TRANSISTOR 2SC2785-E
Q704	8-729-201-53	s	TRANSISTOR 2SA1015-GR
Q705	8-729-119-78	s	TRANSISTOR 2SC2785-HFE

NOTE 2:For the # marked in the following parts list, refer to section 7, Changed Parts.

(CPU-164 BOARD/PROCESSOR)

Ref. No. or Q'ty	Part No.	SP	Description
Q706	8-729-207-36	s	TRANSISTOR 2SJ105-GR
Q707	8-729-207-36	s	TRANSISTOR 2SJ105-GR
Q708	8-729-207-36	s	TRANSISTOR 2SJ105-GR
Q709	8-729-207-36	s	TRANSISTOR 2SJ105-GR
Q710	8-729-207-36	s	TRANSISTOR 2SJ105-GR
R3	1-249-393-11	s	CARBON 10 5% 1/4W
R4	1-249-393-11	s	CARBON 10 5% 1/4W
R9	1-249-393-11	s	CARBON 10 5% 1/4W
R10	1-249-393-11	s	CARBON 10 5% 1/4W
R11	1-249-437-11	s	CARBON 47K 5% 1/4W
R12	1-249-437-11	s	CARBON 47K 5% 1/4W
R13	1-249-437-11	s	CARBON 47K 5% 1/4W
R14	1-249-437-11	s	CARBON 47K 5% 1/4W
R24	1-249-425-11	s	CARBON 4.7K 5% 1/4W
R25	1-249-425-11	s	CARBON 4.7K 5% 1/4W
R26	1-249-425-11	s	CARBON 4.7K 5% 1/4W
R33	1-249-429-11	s	CARBON 10K 5% 1/4W
R34	1-249-429-11	s	CARBON 10K 5% 1/4W
R101	1-249-425-11	s	CARBON 4.7K 5% 1/4W
R102	1-249-425-11	s	CARBON 4.7K 5% 1/4W
R103	1-249-425-11	s	CARBON 4.7K 5% 1/4W
R104	1-249-425-11	s	CARBON 4.7K 5% 1/4W
R105	1-249-402-11	s	CARBON 56 5% 1/4W
R106	1-249-402-11	s	CARBON 56 5% 1/4W
R108	1-249-425-11	s	CARBON 4.7K 5% 1/4W
R109	1-249-425-11	s	CARBON 4.7K 5% 1/4W
R201	1-215-451-00	s	METAL 18K 1% 1/6W
R202	1-247-883-00	s	CARBON 150K 5% 1/4W
R203	1-249-441-11	s	CARBON 100K 5% 1/4W
R204	1-249-393-11	s	CARBON 10 5% 1/4W
R205	1-215-445-00	s	METAL 10K 1% 1/6W
R207	1-249-429-11	s	CARBON 10K 5% 1/4W
R208	1-249-429-11	s	CARBON 10K 5% 1/4W
R324	1-249-425-11	s	CARBON 4.7K 5% 1/4W
R325	1-249-425-11	s	CARBON 4.7K 5% 1/4W
R326	1-249-425-11	s	CARBON 4.7K 5% 1/4W
R333	1-249-429-11	s	CARBON 10K 5% 1/4W
R334	1-249-429-11	s	CARBON 10K 5% 1/4W
R350	1-249-425-11	s	CARBON 4.7K 5% 1/4W
R351	1-249-425-11	s	CARBON 4.7K 5% 1/4W
R352	1-249-425-11	s	CARBON 4.7K 5% 1/4W
R353	1-249-425-11	s	CARBON 4.7K 5% 1/4W
R402	1-249-429-11	s	CARBON 10K 5% 1/4W
R501	1-249-425-11	s	CARBON 4.7K 5% 1/4W
R502	1-249-425-11	s	CARBON 4.7K 5% 1/4W
R504	1-249-425-11	s	CARBON 4.7K 5% 1/4W
#R636	1-249-417-11	s	CARBON 1.0K 5% 1/4W
R700	1-215-445-00	s	METAL 10K 1% 1/6W
R701	1-215-445-00	s	METAL 10K 1% 1/6W
R702	1-215-445-00	s	METAL 10K 1% 1/6W
R703	1-215-477-00	s	METAL 220K 1% 1/6W
R704	1-249-425-11	s	CARBON 4.7K 5% 1/4W
R705	1-247-804-11	s	CARBON 75 5% 1/4W
R707	1-215-461-00	s	METAL 47K 1% 1/6W
R708	1-215-421-00	s	METAL 1K 1% 1/6W
R710	1-215-385-00	s	METAL 33 1% 1/6W
R711	1-215-489-00	s	METAL 680K 1% 1/6W
R739	1-247-895-00	s	CARBON 470K 5% 1/4W
R740	1-249-425-11	s	CARBON 4.7K 5% 1/4W

NOTE 1:Please see page 6-25 for the parts that are not listd in the parts list.

(CPU-164 BOARD/PROCESSOR)

Ref. No. or Q'ty	Part No.	SP	Description
R741	1-249-425-11	s	CARBON 4.7K 5% 1/4W
R742	1-247-887-00	s	CARBON 220K 5% 1/4W
R776	1-215-445-00	s	METAL 10K 1% 1/6W
R777	1-215-447-00	s	METAL 12K 1% 1/6W
R778	1-215-413-00	s	METAL 470 1% 1/6W
R779	1-215-447-00	s	METAL 12K 1% 1/6W
R780	1-249-429-11	s	CARBON 10K 5% 1/4W
R781	1-215-447-00	s	METAL 12K 1% 1/6W
R782	1-249-414-11	s	CARBON 560 5% 1/4W
R787	1-215-391-00	s	METAL 56 1% 1/6W
R788	1-215-439-00	s	METAL 5.6K 1% 1/6W
R789	1-215-439-00	s	METAL 5.6K 1% 1/6W
R790	1-215-445-00	s	METAL 10K 1% 1/6W
R792	1-215-463-00	s	METAL 56K 1% 1/6W
R793	1-249-429-11	s	CARBON 10K 5% 1/4W
R794	1-215-493-00	s	METAL 1M 1% 1/6W
R795	1-215-463-00	s	METAL 56K 1% 1/6W
R796	1-215-493-00	s	METAL 1M 1% 1/6W
R797	1-215-463-00	s	METAL 56K 1% 1/6W
R798	1-215-493-00	s	METAL 1M 1% 1/6W
R799	1-215-439-00	s	METAL 5.6K 1% 1/6W
RB1	1-231-401-00	s	RESISTOR BLOCK 470x8
RB2	1-235-195-00	s	RESISTOR BLOCK 10KX8
RB3	1-235-195-00	s	RESISTOR BLOCK 10KX8
#RB4	1-235-194-00	s	RESISTOR BLOCK 4.7KX8
RB301	1-235-195-00	s	RESISTOR BLOCK 10KX8
RB302	1-231-401-00	s	RESISTOR BLOCK 470x8
RB303	1-235-195-00	s	RESISTOR BLOCK 10KX8
#RB304	1-235-194-00	s	RESISTOR BLOCK 4.7KX8
RB501	1-235-195-00	s	RESISTOR BLOCK 10KX8
RB502	1-235-195-00	s	RESISTOR BLOCK 10KX8
RB503	1-235-195-00	s	RESISTOR BLOCK 10KX8
RB504	1-235-195-00	s	RESISTOR BLOCK 10KX8
RB505	1-231-525-00	s	RESISTOR BLOCK 4.7Kx4
RB506	1-235-196-00	s	RESISTOR BLOCK 100kx8
RB507	1-235-196-00	s	RESISTOR BLOCK 100kx8
RB508	1-231-501-00	s	RESISTOR BLOCK 470x4
RV701	1-230-753-11	s	RES, ADJ, CERMET 100K
RV702	1-230-753-11	s	RES, ADJ, CERMET 100K
RV703	1-230-753-11	s	RES, ADJ, CERMET 100K
S101	1-554-937-11	s	SWITCH, PUSH
S102	1-570-266-11	s	SWITCH, PUSH (1 KEY)
S103	1-570-623-11	s	SWITCH, DIP 8-CKT
S301	1-554-937-11	s	SWITCH, PUSH
S302	1-570-266-11	s	SWITCH, PUSH (1 KEY)
S303	1-570-623-11	s	SWITCH, DIP 8-CKT
S501	1-570-623-11	s	SWITCH, DIP 8-CKT
S502	1-570-623-11	s	SWITCH, DIP 8-CKT
S503	1-570-623-11	s	SWITCH, DIP 8-CKT
S504	1-570-623-11	s	SWITCH, DIP 8-CKT
X1	1-577-258-11	s	CRYSTAL, 32MHz
X708	1-567-853-11	s	CRYSTAL, 4.8MHz
X709	1-567-852-11	s	CRYSTAL, 4.41MHz
X710	1-567-851-11	s	CRYSTAL 4.4MHz

NOTE 2:For the # marked in the following parts list, refer to section 7, Changed Parts.

DIO-26 BOARD/PROCESSOR

Ref. No. or Q'ty	Part No.	SP	Description
1pc	A-8275-408-A	o	MOUNTED CIRCUIT BOARD, DIO-26
2pcs	2-146-577-01	o	LEVER (1), PC BOARD
2pcs	3-174-923-01	o	LEVER (2), PC BOARD
4pcs	7-626-320-11	s	PIN, SPRING 3X8
4pcs	7-685-546-14	s	SCREW +BTP 3X8 TYPE2 N-S
7pcs	7-682-903-01	s	SCREW +PWH 3X5
1pc	3-177-060-02	o	PLATE, SHIELD, PC BOARD
1pc	7-623-954-21	s	WASHER 3.0, FIBER
C1 to C41	1-163-038-00	s	CERAMIC, CHIP 0.1uF 25V
C42	1-130-495-00	s	MYLAR 0.1uF 5% 50V
C43	1-130-471-00	s	MYLAR 0.001uF 5% 50V
C44	1-163-038-00	s	CERAMIC, CHIP 0.1uF 25V
C45	1-162-670-11	s	CERAMIC 18PF 5% 50V
C46	1-163-038-00	s	CERAMIC, CHIP 0.1uF 25V
C48	1-163-038-00	s	CERAMIC, CHIP 0.1uF 25V
C49	1-130-495-00	s	MYLAR 0.1uF 5% 50V
C50	1-130-471-00	s	MYLAR 0.001uF 5% 50V
C51 to C64	1-163-038-00	s	CERAMIC, CHIP 0.1uF 25V
C65	1-126-392-11	s	ELECT, CHIP 100uF 20% 6.3V
C66 to C72	1-163-038-00	s	CERAMIC, CHIP 0.1uF 25V
C83	1-163-038-00	s	CERAMIC, CHIP 0.1uF 25V
C85	1-163-038-00	s	CERAMIC, CHIP 0.1uF 25V
C87 to C90	1-163-038-00	s	CERAMIC, CHIP 0.1uF 25V
C91	1-126-392-11	s	ELECT, CHIP 100uF 20% 6.3V
C92	1-126-392-11	s	ELECT, CHIP 100uF 20% 6.3V
C93	1-126-392-11	s	ELECT, CHIP 100uF 20% 6.3V
C94	1-163-038-00	s	CERAMIC, CHIP 0.1uF 25V
C96 to C101	1-163-038-00	s	CERAMIC, CHIP 0.1uF 25V
C102	1-126-392-11	s	ELECT, CHIP 100uF 20% 6.3V
C103	1-126-392-11	s	ELECT, CHIP 100uF 20% 6.3V
C104	1-126-392-11	s	ELECT, CHIP 100uF 20% 6.3V
C105	1-163-038-00	s	CERAMIC, CHIP 0.1uF 25V
C107 to C112	1-163-038-00	s	CERAMIC, CHIP 0.1uF 25V
C113	1-126-392-11	s	ELECT, CHIP 100uF 20% 6.3V
C114	1-126-392-11	s	ELECT, CHIP 100uF 20% 6.3V
C115	1-126-392-11	s	ELECT, CHIP 100uF 20% 6.3V
C116	1-163-038-00	s	CERAMIC, CHIP 0.1uF 25V
C118 to C123	1-163-038-00	s	CERAMIC, CHIP 0.1uF 25V
C124	1-126-392-11	s	ELECT, CHIP 100uF 20% 6.3V
C125	1-126-392-11	s	ELECT, CHIP 100uF 20% 6.3V
C126	1-126-392-11	s	ELECT, CHIP 100uF 20% 6.3V
C127	1-163-038-00	s	CERAMIC, CHIP 0.1uF 25V
C129	1-163-038-00	s	CERAMIC, CHIP 0.1uF 25V
C130	1-163-038-00	s	CERAMIC, CHIP 0.1uF 25V
C202 to C206	1-163-038-00	s	CERAMIC, CHIP 0.1uF 25V
C210	1-163-038-00	s	CERAMIC, CHIP 0.1uF 25V
C400	1-163-038-00	s	CERAMIC, CHIP 0.1uF 25V
C401	1-163-038-00	s	CERAMIC, CHIP 0.1uF 25V
C402	1-163-038-00	s	CERAMIC, CHIP 0.1uF 25V
C405	1-126-925-11	s	ELECT 470uF 20% 10V

NOTE 1:Please see page 6-25 for the parts that are not listd in the parts list.

(DIO-26 BOARD/PROCESSOR)

Ref. No. or Q'ty	Part No.	SP	Description
C500 to C507	1-163-038-00	s	CERAMIC, CHIP 0.1uF 25V
C700	1-130-474-00	s	MYLAR 0.0018uF 5% 50V
C702	1-130-477-00	s	MYLAR 0.0033uF 5% 50V
C703	1-130-477-00	s	MYLAR 0.0033uF 5% 50V
C704	1-130-477-00	s	MYLAR 0.0033uF 5% 50V
C705	1-163-038-00	s	CERAMIC, CHIP 0.1uF 25V
C706	1-163-038-00	s	CERAMIC, CHIP 0.1uF 25V
C707	1-163-038-00	s	CERAMIC, CHIP 0.1uF 25V
C708	1-163-038-00	s	CERAMIC, CHIP 0.1uF 25V
C710	1-130-474-00	s	MYLAR 0.0018uF 5% 50V
C712	1-130-477-00	s	MYLAR 0.0033uF 5% 50V
C713	1-130-477-00	s	MYLAR 0.0033uF 5% 50V
C714	1-130-477-00	s	MYLAR 0.0033uF 5% 50V
C715	1-163-038-00	s	CERAMIC, CHIP 0.1uF 25V
C716	1-163-038-00	s	CERAMIC, CHIP 0.1uF 25V
C717	1-163-038-00	s	CERAMIC, CHIP 0.1uF 25V
C718	1-163-038-00	s	CERAMIC, CHIP 0.1uF 25V
C720	1-130-474-00	s	MYLAR 0.0018uF 5% 50V
C722	1-130-477-00	s	MYLAR 0.0033uF 5% 50V
C723	1-130-477-00	s	MYLAR 0.0033uF 5% 50V
C724	1-130-477-00	s	MYLAR 0.0033uF 5% 50V
C725	1-163-038-00	s	CERAMIC, CHIP 0.1uF 25V
C726	1-163-038-00	s	CERAMIC, CHIP 0.1uF 25V
C727	1-163-038-00	s	CERAMIC, CHIP 0.1uF 25V
C728	1-163-038-00	s	CERAMIC, CHIP 0.1uF 25V
C730	1-130-474-00	s	MYLAR 0.0018uF 5% 50V
C732	1-130-477-00	s	MYLAR 0.0033uF 5% 50V
C733	1-130-477-00	s	MYLAR 0.0033uF 5% 50V
C734	1-130-477-00	s	MYLAR 0.0033uF 5% 50V
C735	1-163-038-00	s	CERAMIC, CHIP 0.1uF 25V
C736	1-163-038-00	s	CERAMIC, CHIP 0.1uF 25V
C737	1-163-038-00	s	CERAMIC, CHIP 0.1uF 25V
C738	1-163-038-00	s	CERAMIC, CHIP 0.1uF 25V
C740	1-126-396-11	s	ELECT, CHIP 47uF 20% 16V
C741	1-126-392-11	s	ELECT, CHIP 100uF 20% 6.3V
C742	1-126-396-11	s	ELECT, CHIP 47uF 20% 16V
C743	1-126-392-11	s	ELECT, CHIP 100uF 20% 6.3V
C744	1-126-396-11	s	ELECT, CHIP 47uF 20% 16V
C745	1-126-392-11	s	ELECT, CHIP 100uF 20% 6.3V
C746	1-126-396-11	s	ELECT, CHIP 47uF 20% 16V
C747	1-126-392-11	s	ELECT, CHIP 100uF 20% 6.3V
C748	1-126-396-11	s	ELECT, CHIP 47uF 20% 16V
C749	1-126-392-11	s	ELECT, CHIP 100uF 20% 6.3V
C750	1-126-396-11	s	ELECT, CHIP 47uF 20% 16V
C751	1-126-392-11	s	ELECT, CHIP 100uF 20% 6.3V
C752	1-126-396-11	s	ELECT, CHIP 47uF 20% 16V
C753	1-126-392-11	s	ELECT, CHIP 100uF 20% 6.3V
C754	1-126-396-11	s	ELECT, CHIP 47uF 20% 16V
C755	1-126-392-11	s	ELECT, CHIP 100uF 20% 6.3V
C756 to C763	1-163-038-00	s	CERAMIC, CHIP 0.1uF 25V
C764	1-126-940-11	s	ELECT 330uF 20% 25V
C765	1-126-940-11	s	ELECT 330uF 20% 25V
C800	1-163-038-00	s	CERAMIC, CHIP 0.1uF 25V
C801	1-163-038-00	s	CERAMIC, CHIP 0.1uF 25V
C802	1-126-940-11	s	ELECT 330uF 20% 25V
C803	1-126-940-11	s	ELECT 330uF 20% 25V

NOTE 2:For the # marked in the following parts list, refer to section 7, Changed Parts.

(DIO-26 BOARD/PROCESSOR)

Ref. No. or Q'ty	Part No.	SP	Description
C810	1-163-038-00	s	CERAMIC, CHIP 0.1uF 25V
C811	1-163-038-00	s	CERAMIC, CHIP 0.1uF 25V
C812	1-126-940-11	s	ELECT 330uF 20% 25V
C813	1-126-940-11	s	ELECT 330uF 20% 25V
C820	1-163-038-00	s	CERAMIC, CHIP 0.1uF 25V
C821	1-163-038-00	s	CERAMIC, CHIP 0.1uF 25V
C822	1-126-940-11	s	ELECT 330uF 20% 25V
C823	1-126-940-11	s	ELECT 330uF 20% 25V
C830	1-163-038-00	s	CERAMIC, CHIP 0.1uF 25V
C831	1-163-038-00	s	CERAMIC, CHIP 0.1uF 25V
C832	1-126-940-11	s	ELECT 330uF 20% 25V
C833	1-126-940-11	s	ELECT 330uF 20% 25V
CN1	1-506-748-11	s	CONNECTOR, DIN 96P, MALE
CN2	1-506-748-11	s	CONNECTOR, DIN 96P, MALE
CNI6	1-526-816-21	s	SOCKET, IC (DP) 24P
CNI7	1-526-816-21	s	SOCKET, IC (DP) 24P
D1 to D9	8-719-812-42	s	DIODE TLY124
D10	8-719-911-19	s	DIODE 1SS119
D11	8-719-911-19	s	DIODE 1SS119
D12	8-719-812-42	s	DIODE TLY124
FL1	1-424-008-11	s	FILTER, NOISE (SIGNAL LINE)
FL2	1-424-008-11	s	FILTER, NOISE (SIGNAL LINE)
FL3	1-424-008-11	s	FILTER, NOISE (SIGNAL LINE)
FL4	1-424-008-11	s	FILTER, NOISE (SIGNAL LINE)
IC1	8-759-926-77	s	IC SN74HC541NS
IC2	8-759-926-77	s	IC SN74HC541NS
IC3	8-759-985-78	s	IC 74AC541SJ
IC4	8-759-926-49	s	IC SN74HC245NS
IC5	8-759-926-49	s	IC SN74HC245NS
IC6	8-759-247-71	o	IC GAL22V10B-IODEC-V1.0
IC7	8-759-247-72	o	IC GAL22V10B-DSDEC-V1.0
IC8	8-759-926-11	s	IC SN74HC138NS
IC9	8-759-926-11	s	IC SN74HC138NS
IC10	8-759-926-23	s	IC SN74HC163NS
IC11	8-759-926-25	s	IC SN74HC165ANS
IC12	8-759-926-77	s	IC SN74HC541NS
IC13	8-759-926-77	s	IC SN74HC541NS
IC14	8-759-926-77	s	IC SN74HC541NS
IC15	8-759-926-77	s	IC SN74HC541NS
IC16	8-759-977-89	s	IC CXD8014G
IC17	8-759-069-38	s	IC CXD8278AQ
IC18	8-759-069-38	s	IC CXD8278AQ
IC19	8-759-069-38	s	IC CXD8278AQ
IC20	8-759-069-38	s	IC CXD8278AQ
IC21	8-759-926-77	s	IC SN74HC541NS
IC22 to IC26	8-759-069-38	s	IC CXD8278AQ
IC27	8-759-926-77	s	IC SN74HC541NS
IC28 to IC37	8-752-332-80	s	IC CXD1160AQ
IC38	8-759-926-50	s	IC SN74HC251ANS
IC39	8-759-239-55	s	IC TC74HC123AF
IC41	8-752-306-51	s	IC CX23065A
IC42	8-759-931-43	s	IC SN74LS624NS
IC44	8-752-306-51	s	IC CX23065A

NOTE 1:Please see page 6-25 for the parts that are not listd in the parts list.

(DIO-26 BOARD/PROCESSOR)

Ref. No. or Q'ty	Part No.	SP	Description
IC45	8-759-926-82	s	IC SN74HC574ANS
IC46	8-759-925-90	s	IC SN74HC74NS
IC47	8-759-926-23	s	IC SN74HC163NS
IC48	8-759-985-41	s	IC 74AC163SJ
IC49	8-759-985-41	s	IC 74AC163SJ
IC50	8-759-927-46	s	IC SN74HC00NS
IC51	8-759-925-72	s	IC SN74HC02NS
IC52	8-759-985-78	s	IC 74AC541SJ
IC53	8-759-985-26	s	IC 74AC74SJ
IC54	8-759-985-78	s	IC 74AC541SJ
IC55	8-759-985-78	s	IC 74AC541SJ
IC56	8-759-951-23	s	IC SN75123N
IC57 to IC61	8-759-062-88	s	IC CXD8277Q
IC62	8-759-926-77	s	IC SN74HC541NS
IC65	8-759-156-71	s	IC SM583AP1
IC66	8-759-156-71	s	IC SM583AP1
IC67	8-759-510-35	s	IC PCM63P-K
IC68	8-759-510-35	s	IC PCM63P-K
IC69	8-759-510-35	s	IC PCM63P-K
IC70	8-759-510-35	s	IC PCM63P-K
IC91	8-759-069-38	s	IC CXD8278AQ
IC92	8-759-925-90	s	IC SN74HC74NS
IC100	8-759-985-17	s	IC 74AC04SJ
IC101	8-759-925-85	s	IC SN74HC32NS
IC102	8-759-926-82	s	IC SN74HC574ANS
IC103	8-759-926-82	s	IC SN74HC574ANS
IC104	8-759-926-82	s	IC SN74HC574ANS
IC105	8-759-925-85	s	IC SN74HC32NS
IC106	8-759-926-82	s	IC SN74HC574ANS
IC107	8-759-926-18	s	IC SN74HC157ANS
IC108	8-759-926-18	s	IC SN74HC157ANS
IC109	8-759-926-18	s	IC SN74HC157ANS
IC110	8-759-927-46	s	IC SN74HC00NS
IC500	8-759-069-38	s	IC CXD8278AQ
IC501	8-752-332-80	s	IC CXD1160AQ
IC502	8-759-926-15	s	IC SN74HC151NS
IC503	8-759-926-15	s	IC SN74HC151NS
IC504	8-759-926-82	s	IC SN74HC574ANS
IC505	8-759-926-82	s	IC SN74HC574ANS
IC506	8-759-926-11	s	IC SN74HC138NS
IC507	8-752-332-80	s	IC CXD1160AQ
IC700	8-759-900-72	s	IC NE5532P
IC701	8-759-900-72	s	IC NE5532P
IC710	8-759-900-72	s	IC NE5532P
IC711	8-759-900-72	s	IC NE5532P
IC720	8-759-900-72	s	IC NE5532P
IC721	8-759-900-72	s	IC NE5532P
IC730	8-759-900-72	s	IC NE5532P
IC731	8-759-900-72	s	IC NE5532P
IC740	8-759-708-05	s	IC NJM78L05A
IC741	8-759-708-05	s	IC NJM78L05A
IC742	8-759-708-05	s	IC NJM78L05A
IC743	8-759-708-05	s	IC NJM78L05A
IC744	8-759-700-65	s	IC NJM79L05A
IC745	8-759-700-65	s	IC NJM79L05A
IC746	8-759-700-65	s	IC NJM79L05A
IC747	8-759-700-65	s	IC NJM79L05A
IC801	1-808-838-11	s	HIC TAA-1S

NOTE 2:For the # marked in the following parts list, refer to section 7, Changed Parts.

(DIO-26 BOARD/PROCESSOR)

Ref. No. or Q'ty	Part No.	SP	Description
IC802	1-808-838-11	s	HIC TAA-1S
IC803	1-808-838-11	s	HIC TAA-1S
IC804	1-808-838-11	s	HIC TAA-1S
L3	1-410-517-11	s	INDUCTOR 47uH
Q1	8-729-205-97	s	TRANSISTOR 2SC3668-Y
R1 to R9	1-249-413-11	s	CARBON 470 5% 1/4W
R11	1-216-651-11	s	METAL, CHIP 1K 0.5% 1/10W
R12	1-216-667-11	s	METAL, CHIP 4.7K 0.5% 1/10W
R13	1-216-651-11	s	METAL, CHIP 1K 0.5% 1/10W
R14	1-216-659-11	s	METAL, CHIP 2.2K 0.5% 1/10W
R15	1-216-659-11	s	METAL, CHIP 2.2K 0.5% 1/10W
R16	1-216-653-11	s	METAL, CHIP 1.2K 0.5% 1/10W
R17	1-216-668-11	s	METAL, CHIP 5.1K 0.5% 1/10W
R18	1-216-651-11	s	METAL, CHIP 1K 0.5% 1/10W
R405	1-249-397-11	s	CARBON 22 5% 1/4W
R500	1-249-413-11	s	CARBON 470 5% 1/4W
R700	1-215-429-00	s	METAL 2.2K 1% 1/6W
R701	1-215-423-00	s	METAL 1.2K 1% 1/6W
R702	1-215-423-00	s	METAL 1.2K 1% 1/6W
R703	1-215-423-00	s	METAL 1.2K 1% 1/6W
R704	1-215-423-00	s	METAL 1.2K 1% 1/6W
R705	1-215-445-00	s	METAL 10K 1% 1/6W
R710	1-215-429-00	s	METAL 2.2K 1% 1/6W
R711	1-215-423-00	s	METAL 1.2K 1% 1/6W
R712	1-215-423-00	s	METAL 1.2K 1% 1/6W
R713	1-215-423-00	s	METAL 1.2K 1% 1/6W
R714	1-215-423-00	s	METAL 1.2K 1% 1/6W
R715	1-215-445-00	s	METAL 10K 1% 1/6W
R720	1-215-429-00	s	METAL 2.2K 1% 1/6W
R721	1-215-423-00	s	METAL 1.2K 1% 1/6W
R722	1-215-423-00	s	METAL 1.2K 1% 1/6W
R723	1-215-423-00	s	METAL 1.2K 1% 1/6W
R724	1-215-423-00	s	METAL 1.2K 1% 1/6W
R725	1-215-445-00	s	METAL 10K 1% 1/6W
R730	1-215-429-00	s	METAL 2.2K 1% 1/6W
R731	1-215-423-00	s	METAL 1.2K 1% 1/6W
R732	1-215-423-00	s	METAL 1.2K 1% 1/6W
R733	1-215-423-00	s	METAL 1.2K 1% 1/6W
R734	1-215-423-00	s	METAL 1.2K 1% 1/6W
R735	1-215-445-00	s	METAL 10K 1% 1/6W
R740	1-249-411-11	s	CARBON 330 5% 1/4W
R741	1-249-411-11	s	CARBON 330 5% 1/4W
R742	1-249-411-11	s	CARBON 330 5% 1/4W
R743	1-249-411-11	s	CARBON 330 5% 1/4W
R744 to R751	1-249-409-11	s	CARBON 220 5% 1/4W
R800	1-215-445-00	s	METAL 10K 1% 1/6W
R801	1-215-394-00	s	METAL 75 1% 1/6W
R802	1-215-394-00	s	METAL 75 1% 1/6W
R803	1-215-394-00	s	METAL 75 1% 1/6W
R804	1-215-394-00	s	METAL 75 1% 1/6W
R810	1-215-445-00	s	METAL 10K 1% 1/6W
R811	1-215-394-00	s	METAL 75 1% 1/6W
R812	1-215-394-00	s	METAL 75 1% 1/6W
R813	1-215-394-00	s	METAL 75 1% 1/6W
R814	1-215-394-00	s	METAL 75 1% 1/6W

NOTE 1:Please see page 6-25 for the parts that are not listd in the parts list.

(DIO-26 BOARD/PROCESSOR)

Ref. No. or Q'ty	Part No.	SP	Description
R820	1-215-445-00	s	METAL 10K 1% 1/6W
R821	1-215-394-00	s	METAL 75 1% 1/6W
R822	1-215-394-00	s	METAL 75 1% 1/6W
R823	1-215-394-00	s	METAL 75 1% 1/6W
R824	1-215-394-00	s	METAL 75 1% 1/6W
R830	1-215-445-00	s	METAL 10K 1% 1/6W
R831	1-215-394-00	s	METAL 75 1% 1/6W
R832	1-215-394-00	s	METAL 75 1% 1/6W
R833	1-215-394-00	s	METAL 75 1% 1/6W
R834	1-215-394-00	s	METAL 75 1% 1/6W
R840	1-249-418-11	s	CARBON 1.2K 5% 1/4W
R900 to R907	1-215-435-00	s	METAL 3.9K 1% 1/6W
RB1 to RB5	1-235-195-00	s	RESISTOR BLOCK 10KX8
RV1	1-230-749-11	s	RES, ADJ, CERMET 5K
RV2	1-230-749-11	s	RES, ADJ, CERMET 5K
RV3	1-230-749-11	s	RES, ADJ, CERMET 5K
RV4	1-230-749-11	s	RES, ADJ, CERMET 5K
RY1	1-515-716-11	s	RELAY (TQ2-5V)
RY2	1-515-716-11	s	RELAY (TQ2-5V)
RY3	1-515-716-11	s	RELAY (TQ2-5V)
RY4	1-515-716-11	s	RELAY (TQ2-5V)
S1	1-553-252-00	s	SWITCH, DIGITAL
X1	8-749-923-59	s	IC VCO-8003
X2	1-577-258-11	s	CRYSTAL, 32MHz

DP-131 BOARD/PROCESSOR

Ref. No. or Q'ty	Part No.	SP	Description
1pc	1-636-210-11	o	PRINTED CIRCUIT BOARD, DP-131
1pc	1-526-652-21	o	SOCKET, IC 8P
CN1	1-564-002-11	s	PIN, CONNECTOR 3P
D1	8-719-921-06	s	LED HLMP-2965, RED
R1	1-249-403-11	s	CARBON 68 5% 1/4W
R2	1-249-403-11	s	CARBON 68 5% 1/4W
R3	1-249-403-11	s	CARBON 68 5% 1/4W
R4	1-249-403-11	s	CARBON 68 5% 1/4W

NOTE 2:For the # marked in the following parts list, refer to section 7, Changed Parts.

MB-481 BOARD/PROCESSOR

Ref. No. or Q'ty	Part No.	SP	Description
1pc	A-8276-795-A	o	MOUNTED CIRCUIT BOARD, MB-481
C1 to C5	1-102-959-00	s	CERAMIC 22PF 5% 50V
CN5 to CN9	1-563-337-11	s	CONNECTOR, DIN 96P, FEMALE
CN1A	1-563-337-11	s	CONNECTOR, DIN 96P, FEMALE
CN1B	1-563-337-11	s	CONNECTOR, DIN 96P, FEMALE
CN10	1-564-002-11	s	PIN, CONNECTOR 3P
CN11	1-564-915-11	o	CONNECTOR, VH 7P, MALE
CN12	1-506-474-11	s	CONNECTOR 9P, MALE
CN3A	1-563-337-11	s	CONNECTOR, DIN 96P, FEMALE
CN3B	1-563-337-11	s	CONNECTOR, DIN 96P, FEMALE
CN4A	1-563-337-11	s	CONNECTOR, DIN 96P, FEMALE
CN4B	1-563-337-11	s	CONNECTOR, DIN 96P, FEMALE
#R1	1-215-860-11	s	METAL 33 5% 1W
RB1	1-235-192-00	s	RESISTOR BLOCK 1KX8

MIX-15 BOARD/PROCESSOR

Ref. No. or Q'ty	Part No.	SP	Description
1pc	A-8275-409-A	o	MOUNTED CIRCUIT BOARD, MIX-15
2pcs	2-146-577-01	o	LEVER (1), PC BOARD
2pcs	3-174-923-01	o	LEVER (2), PC BOARD
2pcs	7-626-320-11	s	PIN, SPRING 3X8
4pcs	7-685-546-14	s	SCREW +BTP 3X8 TYPE2 N-S
7pcs	7-682-903-01	s	SCREW +PWH 3X5
1pc	3-177-060-02	o	PLATE, SHIELD, PC BOARD
2pcs	7-626-320-11	s	PIN, SPRING 3X8
C100	1-126-947-11	s	ELECT 47uF 20% 35V
C101	1-126-947-11	s	ELECT 47uF 20% 35V
CN1	1-506-748-11	s	CONNECTOR, DIN 96P, MALE
CN2	1-506-748-11	s	CONNECTOR, DIN 96P, MALE
CNI5	1-526-816-21	s	SOCKET, IC (DP) 24P
CNI64	1-526-816-21	s	SOCKET, IC (DP) 24P
D1 to D20	8-719-812-43	s	LED TLG124A, GRN
D21	8-719-812-42	s	DIODE TLY124
IC1	8-759-926-77	s	IC SN74HC541NS
IC2	8-759-926-77	s	IC SN74HC541NS
IC3	8-759-985-78	s	IC 74AC541SJ
IC4	8-759-926-11	s	IC SN74HC138NS
IC5	8-759-079-20	o	IC GAL22V10-MIXDEC-V1.0
IC6	8-759-925-90	s	IC SN74HC74NS
IC7	8-759-926-76	s	IC SN74HC540NS
IC8	8-759-985-78	s	IC 74AC541SJ
IC9	8-759-985-78	s	IC 74AC541SJ
IC10	8-759-925-74	s	IC TC74HC04NS
IC11	8-759-926-76	s	IC SN74HC540NS
IC12	8-759-925-85	s	IC SN74HC32NS
IC13	8-759-926-11	s	IC SN74HC138NS
IC14	8-759-926-49	s	IC SN74HC245NS
IC15	8-759-926-49	s	IC SN74HC245NS
IC16	8-759-926-82	s	IC SN74HC574ANS
IC17	8-759-926-82	s	IC SN74HC574ANS
IC18	8-759-985-78	s	IC 74AC541SJ
IC20	8-759-926-23	s	IC SN74HC163NS
IC21	8-759-926-23	s	IC SN74HC163NS
IC22	8-759-925-85	s	IC SN74HC32NS
IC23	8-759-926-25	s	IC SN74HC165ANS
IC24	8-759-926-25	s	IC SN74HC165ANS
IC25	8-759-925-74	s	IC TC74HC04NS
IC26	8-759-925-85	s	IC SN74HC32NS
IC27	8-759-985-78	s	IC 74AC541SJ
IC28	8-752-352-30	s	IC CXD2705AQ
IC29	8-752-352-30	s	IC CXD2705AQ
IC30	8-759-926-77	s	IC SN74HC541NS
IC31	8-759-925-90	s	IC SN74HC74NS
IC32 to IC39	8-759-070-11	s	IC TC514256BZ-60
IC40	8-752-352-30	s	IC CXD2705AQ
IC41	8-752-352-30	s	IC CXD2705AQ
IC42	8-759-926-05	s	IC SN74HC125NS
IC43	8-759-926-06	s	IC SN74HC126NS
IC44	8-759-926-05	s	IC SN74HC125NS
IC45	8-759-926-06	s	IC SN74HC126NS

NOTE 1:Please see page 6-25 for the parts that are not listd in the parts list.

NOTE 2:For the # marked in the following parts list, refer to section 7, Changed Parts.

(MIX-15 BOARD/PROCESSOR)

Ref. No. or Q'ty	Part No.	SP	Description
IC46	8-752-352-30	s	IC CXD2705AQ
IC47	8-752-352-30	s	IC CXD2705AQ
IC48	8-752-352-30	s	IC CXD2705AQ
IC49	8-752-352-30	s	IC CXD2705AQ
IC50	8-759-043-67	s	IC CXD8307Q
IC51	8-759-043-67	s	IC CXD8307Q
IC52 to IC59	8-752-352-30	s	IC CXD2705AQ
IC60	8-759-994-41	s	IC CXD8025Q
IC61	8-759-994-41	s	IC CXD8025Q
IC62	8-759-926-05	s	IC SN74HC125NS
IC63	8-759-926-06	s	IC SN74HC126NS
IC64	8-759-196-05	o	IC GAL22V10B-MIXINS-V2.0
IC65	8-759-926-82	s	IC SN74HC574ANS
IC66	8-759-926-82	s	IC SN74HC574ANS
IC67	8-759-926-11	s	IC SN74HC138NS
IC68	8-752-352-30	s	IC CXD2705AQ
IC69	8-752-352-30	s	IC CXD2705AQ
IC70	8-752-352-30	s	IC CXD2705AQ
IC71	8-752-352-30	s	IC CXD2705AQ
IC72	8-759-926-76	s	IC SN74HC540NS
IC73	8-759-925-85	s	IC SN74HC32NS
IC74	8-759-926-77	s	IC SN74HC541NS
IC75	8-759-926-77	s	IC SN74HC541NS
IC80	8-759-926-77	s	IC SN74HC541NS
IC81	8-759-926-77	s	IC SN74HC541NS
IC83	8-759-926-18	s	IC SN74HC157ANS
IC84	8-759-926-18	s	IC SN74HC157ANS
IC100	8-759-926-12	s	IC SN74HC139NS
IC101	8-759-925-90	s	IC SN74HC74NS
IC102	8-759-925-90	s	IC SN74HC74NS
IC103	8-759-925-90	s	IC SN74HC74NS
IC104	8-759-926-82	s	IC SN74HC574ANS
IC105	8-759-926-82	s	IC SN74HC574ANS
IC106	8-759-926-24	s	IC SN74HC164NS
IC107	8-759-926-24	s	IC SN74HC164NS
IC108	8-759-925-76	s	IC SN74HC08NS
IC109	8-759-925-85	s	IC SN74HC32NS
JW1	1-566-388-11	s	CONNECTOR 8P, MALE
R1	1-215-433-00	s	METAL 3.3K 1% 1/6W
R2	1-215-433-00	s	METAL 3.3K 1% 1/6W
R3	1-215-425-00	s	METAL 1.5K 1% 1/6W
R4	1-215-425-00	s	METAL 1.5K 1% 1/6W
R5	1-215-433-00	s	METAL 3.3K 1% 1/6W
R6	1-215-433-00	s	METAL 3.3K 1% 1/6W
R7	1-215-433-00	s	METAL 3.3K 1% 1/6W
R8	1-215-433-00	s	METAL 3.3K 1% 1/6W
R9	1-215-425-00	s	METAL 1.5K 1% 1/6W
R10	1-215-425-00	s	METAL 1.5K 1% 1/6W
R11	1-215-425-00	s	METAL 1.5K 1% 1/6W
R12	1-215-425-00	s	METAL 1.5K 1% 1/6W
R13	1-215-433-00	s	METAL 3.3K 1% 1/6W
R14	1-215-433-00	s	METAL 3.3K 1% 1/6W
R15	1-215-425-00	s	METAL 1.5K 1% 1/6W
R16	1-215-425-00	s	METAL 1.5K 1% 1/6W
R17	1-249-429-11	s	CARBON 10K 5% 1/4W
RB1 to RB6	1-235-195-00	s	RESISTOR BLOCK 10KX8

NOTE 1:Please see page 6-25 for the parts that are not listd in the parts list.

(MIX-15 BOARD/PROCESSOR)

Ref. No. or Q'ty	Part No.	SP	Description
RB7	1-231-533-00	s	RESISTOR BLOCK 10Kx4
RB8	1-231-533-00	s	RESISTOR BLOCK 10Kx4
RB9	1-231-401-00	s	RESISTOR BLOCK 470x8
RB10	1-231-401-00	s	RESISTOR BLOCK 470x8
RB11	1-235-332-11	s	RESISTOR BLOCK 470X8
RB12	1-235-195-00	s	RESISTOR BLOCK 10KX8
RB13	1-235-195-00	s	RESISTOR BLOCK 10KX8
S1	1-570-623-11	s	SWITCH, DIP 8-CKT
S2	1-570-623-11	s	SWITCH, DIP 8-CKT
X1	1-577-170-11	s	CRYSTAL, 50MHz

NOTE 2:For the # marked in the following parts list, refer to section 7, Changed Parts.

PS-313 BOARD/PROCESSOE

Ref. No. or Q'ty	Part No.	SP	Description
1pc	A-8275-420-A	o	MOUNTED CIRCUIT BOARD, PS-313
1pc	7-621-773-87	s	SCREW +B 2.6X10
1pc	7-622-207-05	s	N 2.6, TYPE 2
C1	1-124-584-00	s	ELECT 100uF 20% 10V
C2	1-101-004-00	s	CERAMIC 0.01uF 50V
C3	1-124-584-00	s	ELECT 100uF 20% 10V
C4	1-101-004-00	s	CERAMIC 0.01uF 50V
C5	1-124-584-00	s	ELECT 100uF 20% 10V
C6	1-101-004-00	s	CERAMIC 0.01uF 50V
C11	1-126-948-11	s	ELECT 100uF 20% 35V
C12	1-101-004-00	s	CERAMIC 0.01uF 50V
C13	1-126-948-11	s	ELECT 100uF 20% 35V
C14	1-101-004-00	s	CERAMIC 0.01uF 50V
C15	1-126-948-11	s	ELECT 100uF 20% 35V
C16	1-101-004-00	s	CERAMIC 0.01uF 50V
C21	1-126-948-11	s	ELECT 100uF 20% 35V
C22	1-101-004-00	s	CERAMIC 0.01uF 50V
C23	1-126-948-11	s	ELECT 100uF 20% 35V
C24	1-101-004-00	s	CERAMIC 0.01uF 50V
C25	1-126-948-11	s	ELECT 100uF 20% 35V
C26	1-101-004-00	s	CERAMIC 0.01uF 50V
CN1	1-564-104-00	o	PIN, CONNECTOR (B3P-VH) 3P
CN2	1-564-915-11	o	CONNECTOR, VH 7P, MALE
CN3	1-564-915-11	o	CONNECTOR, VH 7P, MALE
CN4	1-506-474-11	s	CONNECTOR 9P, MALE
CN5	1-564-002-11	s	PIN, CONNECTOR 3P
CN6	1-564-320-00	s	PIN, CONNECTOR (B2P-VH) 2P
D1	8-719-033-57	s	DIODE ESAE83-006
D2	8-719-500-30	s	DIODE S10SC4M
D3	8-719-500-31	s	DIODE S10SC4MR
D4	8-719-109-93	s	DIODE RD6.2ESB2
FIL1 to FIL5	1-236-071-11	s	ENCAPSULATED COMPONENT, LC
IC1	8-759-917-05	s	IC SN74HC541AN
IC2	8-759-007-09	s	IC MC74HC540N
PH1	8-719-946-27	s	PHOTO COUPLER PC837
PH2	8-719-946-27	s	PHOTO COUPLER PC837
R3	1-249-413-11	s	CARBON 470 5% 1/4W
R4	1-249-413-11	s	CARBON 470 5% 1/4W
R11	1-249-423-11	s	CARBON 3.3K 5% 1/4W
R12	1-249-423-11	s	CARBON 3.3K 5% 1/4W
R13	1-249-418-11	s	CARBON 1.2K 5% 1/4W
R14	1-249-418-11	s	CARBON 1.2K 5% 1/4W
R21	1-249-423-11	s	CARBON 3.3K 5% 1/4W
R22	1-249-423-11	s	CARBON 3.3K 5% 1/4W
R23	1-249-418-11	s	CARBON 1.2K 5% 1/4W
R24	1-249-418-11	s	CARBON 1.2K 5% 1/4W
RB1	1-235-192-00	s	RESISTOR BLOCK 1KX8

DMX-B4016 PROCESSOR

CN-827 BOARD/PROCESSOR

Ref. No. or Q'ty	Part No.	SP	Description
1pc	A-8275-634-A	o	MOUNTED CIRCUIT BOARD, CN-827
1pc	3-184-317-02	o	PANEL, CN-827
4pcs	7-682-903-01	s	SCREW +PWH 3X5
2pcs	7-685-546-14	s	SCREW +BTP 3X8 TYPE2 N-S
2pcs	3-172-089-01	o	HANDLE
4pcs	7-682-547-04	s	SCREW +B 3X6
2pcs	7-621-259-35	s	SCREW +P 2.6X5
1pc	3-184-856-01	o	PLATE, SHIELD CN
3pcs	3-184-772-01	o	NUT, PLATE
3pcs	7-627-454-18	s	SCREW, PRECISION +K 2.6X4
C3	1-130-499-00	s	MYLAR 0.22uF 5% 50V
C4	1-130-499-00	s	MYLAR 0.22uF 5% 50V
C5	1-101-880-00	s	CERAMIC 47PF 5% 50V
C6	1-101-880-00	s	CERAMIC 47PF 5% 50V
CN1	1-506-748-11	s	CONNECTOR, DIN 96P, MALE
CN2	1-563-772-11	o	CONNECTOR, D-SUB 25P, FEMALE
CN3	1-563-771-11	s	CONNECTOR, D-SUB 15P, FEMALE
CN6	1-568-006-11	s	CONNECTOR, XLR 3P, FEMALE
CN7 to CN11	1-764-273-11	s	CONNECTOR, COAXIAL (BNC TYPE)
D1	8-719-911-19	s	DIODE 1SS119
D2	8-719-911-19	s	DIODE 1SS119
D3	8-719-911-19	s	DIODE 1SS119
D4	8-719-911-19	s	DIODE 1SS119
FL1 to FL16	1-236-163-11	s	ENCAPSULATED COMPONENT
FL17	1-236-129-11	s	ENCAPSULATED COMPONENTS, LC
FL18	1-236-129-11	s	ENCAPSULATED COMPONENTS, LC
FL101	1-424-008-11	s	FILTER, NOISE (SIGNAL LINE)
IC1	8-759-926-32	s	IC AM26LS32PC
IC2	8-759-916-20	s	IC SN74HC14AN
R1	1-215-398-00	s	METAL 110 1% 1/6W
R4	1-249-429-11	s	CARBON 10K 5% 1/4W
R5	1-249-429-11	s	CARBON 10K 5% 1/4W
T1	1-437-194-21	s	TRANSFORMER, PULSE

NOTE 1:Please see page 6-25 for the parts that are not listd in the parts list.

NOTE 2:For the # marked in the following parts list, refer to section 7, Changed Parts.

CN-828A BOARD/PROCESSOR

Ref. No. or Q'ty	Part No.	SP	Description
1pc	A-8275-635-A	o	MOUNTED CIRCUIT BOARD, CN-828A
1pc	3-184-316-02	o	PANEL, CN-828A
4pcs	7-682-903-01	s	SCREW +PWH 3X5
2pcs	7-685-546-14	s	SCREW +BTP 3X8 TYPE2 N-S
2pcs	3-172-089-01	o	HANDLE
32pcs	7-621-259-35	s	SCREW +P 2.6X5
1pc	3-184-856-01	o	PLATE, SHIELD CN
3pcs	3-184-772-01	o	NUT, PLATE
3pcs	7-627-454-18	s	SCREW, PRECISION +K 2.6X4
C7	1-124-589-11	s	ELECT 47uF 20% 16V
C11	1-130-499-00	s	MYLAR 0.22uF 5% 50V
C12	1-130-499-00	s	MYLAR 0.22uF 5% 50V
C13	1-101-880-00	s	CERAMIC 47PF 5% 50V
C14	1-101-880-00	s	CERAMIC 47PF 5% 50V
C21	1-130-499-00	s	MYLAR 0.22uF 5% 50V
C22	1-130-499-00	s	MYLAR 0.22uF 5% 50V
C23	1-101-880-00	s	CERAMIC 47PF 5% 50V
C24	1-101-880-00	s	CERAMIC 47PF 5% 50V
C31	1-130-499-00	s	MYLAR 0.22uF 5% 50V
C32	1-130-499-00	s	MYLAR 0.22uF 5% 50V
C33	1-101-880-00	s	CERAMIC 47PF 5% 50V
C34	1-101-880-00	s	CERAMIC 47PF 5% 50V
C41	1-130-499-00	s	MYLAR 0.22uF 5% 50V
C42	1-130-499-00	s	MYLAR 0.22uF 5% 50V
C43	1-101-880-00	s	CERAMIC 47PF 5% 50V
C44	1-101-880-00	s	CERAMIC 47PF 5% 50V
C51	1-130-499-00	s	MYLAR 0.22uF 5% 50V
C52	1-130-499-00	s	MYLAR 0.22uF 5% 50V
C53	1-101-880-00	s	CERAMIC 47PF 5% 50V
C54	1-101-880-00	s	CERAMIC 47PF 5% 50V
C61	1-130-499-00	s	MYLAR 0.22uF 5% 50V
C62	1-130-499-00	s	MYLAR 0.22uF 5% 50V
C63	1-101-880-00	s	CERAMIC 47PF 5% 50V
C64	1-101-880-00	s	CERAMIC 47PF 5% 50V
C71	1-130-499-00	s	MYLAR 0.22uF 5% 50V
C72	1-130-499-00	s	MYLAR 0.22uF 5% 50V
C73	1-101-880-00	s	CERAMIC 47PF 5% 50V
C74	1-101-880-00	s	CERAMIC 47PF 5% 50V
C81	1-130-499-00	s	MYLAR 0.22uF 5% 50V
C82	1-130-499-00	s	MYLAR 0.22uF 5% 50V
C83	1-101-880-00	s	CERAMIC 47PF 5% 50V
C84	1-101-880-00	s	CERAMIC 47PF 5% 50V
C91	1-130-499-00	s	MYLAR 0.22uF 5% 50V
C92	1-130-499-00	s	MYLAR 0.22uF 5% 50V
C93	1-101-880-00	s	CERAMIC 47PF 5% 50V
C94	1-101-880-00	s	CERAMIC 47PF 5% 50V
C101	1-130-499-00	s	MYLAR 0.22uF 5% 50V
C102	1-130-499-00	s	MYLAR 0.22uF 5% 50V
C103	1-101-880-00	s	CERAMIC 47PF 5% 50V
C104	1-101-880-00	s	CERAMIC 47PF 5% 50V
C111	1-130-499-00	s	MYLAR 0.22uF 5% 50V
C112	1-130-499-00	s	MYLAR 0.22uF 5% 50V
C113	1-101-880-00	s	CERAMIC 47PF 5% 50V
C114	1-101-880-00	s	CERAMIC 47PF 5% 50V
C121	1-130-499-00	s	MYLAR 0.22uF 5% 50V
C122	1-130-499-00	s	MYLAR 0.22uF 5% 50V
C123	1-101-880-00	s	CERAMIC 47PF 5% 50V
C124	1-101-880-00	s	CERAMIC 47PF 5% 50V
C131	1-130-499-00	s	MYLAR 0.22uF 5% 50V

(CN-828A BOARD/PROCESSOR)

Ref. No. or Q'ty	Part No.	SP	Description
C132	1-130-499-00	s	MYLAR 0.22uF 5% 50V
C133	1-101-880-00	s	CERAMIC 47PF 5% 50V
C134	1-101-880-00	s	CERAMIC 47PF 5% 50V
C141	1-130-499-00	s	MYLAR 0.22uF 5% 50V
C142	1-130-499-00	s	MYLAR 0.22uF 5% 50V
C143	1-101-880-00	s	CERAMIC 47PF 5% 50V
C144	1-101-880-00	s	CERAMIC 47PF 5% 50V
C151	1-130-499-00	s	MYLAR 0.22uF 5% 50V
C152	1-130-499-00	s	MYLAR 0.22uF 5% 50V
C153	1-101-880-00	s	CERAMIC 47PF 5% 50V
C154	1-101-880-00	s	CERAMIC 47PF 5% 50V
C161	1-130-499-00	s	MYLAR 0.22uF 5% 50V
C162	1-130-499-00	s	MYLAR 0.22uF 5% 50V
C163	1-101-880-00	s	CERAMIC 47PF 5% 50V
C164	1-101-880-00	s	CERAMIC 47PF 5% 50V
CN1	1-506-748-11	s	CONNECTOR, DIN 96P, MALE
CN2 to CN17	1-568-006-11	s	CONNECTOR, XLR 3P, FEMALE
COR1	1-564-947-21	o	PIN, SHORTING, 2P
CP1	8-719-980-37	s	DIODE DAN803
CP2	8-719-980-36	s	DIODE DAP803
CP3	8-719-980-37	s	DIODE DAN803
CP4	8-719-980-36	s	DIODE DAP803
CP5	8-719-980-37	s	DIODE DAN803
CP6	8-719-980-36	s	DIODE DAP803
CP7	8-719-980-37	s	DIODE DAN803
CP8	8-719-980-36	s	DIODE DAP803
FL1	1-424-008-11	s	FILTER, NOISE (SIGNAL LINE)
FL11	1-236-129-11	s	ENCAPSULATED COMPONENTS, LC
FL12	1-236-129-11	s	ENCAPSULATED COMPONENTS, LC
FL21	1-236-129-11	s	ENCAPSULATED COMPONENTS, LC
FL22	1-236-129-11	s	ENCAPSULATED COMPONENTS, LC
FL31	1-236-129-11	s	ENCAPSULATED COMPONENTS, LC
FL32	1-236-129-11	s	ENCAPSULATED COMPONENTS, LC
FL41	1-236-129-11	s	ENCAPSULATED COMPONENTS, LC
FL42	1-236-129-11	s	ENCAPSULATED COMPONENTS, LC
FL51	1-236-129-11	s	ENCAPSULATED COMPONENTS, LC
FL52	1-236-129-11	s	ENCAPSULATED COMPONENTS, LC
FL61	1-236-129-11	s	ENCAPSULATED COMPONENTS, LC
FL62	1-236-129-11	s	ENCAPSULATED COMPONENTS, LC
FL71	1-236-129-11	s	ENCAPSULATED COMPONENTS, LC
FL72	1-236-129-11	s	ENCAPSULATED COMPONENTS, LC
FL81	1-236-129-11	s	ENCAPSULATED COMPONENTS, LC
FL82	1-236-129-11	s	ENCAPSULATED COMPONENTS, LC
FL91	1-236-129-11	s	ENCAPSULATED COMPONENTS, LC
FL92	1-236-129-11	s	ENCAPSULATED COMPONENTS, LC
FL101	1-236-129-11	s	ENCAPSULATED COMPONENTS, LC
FL102	1-236-129-11	s	ENCAPSULATED COMPONENTS, LC
FL111	1-236-129-11	s	ENCAPSULATED COMPONENTS, LC
FL112	1-236-129-11	s	ENCAPSULATED COMPONENTS, LC
FL121	1-236-129-11	s	ENCAPSULATED COMPONENTS, LC
FL122	1-236-129-11	s	ENCAPSULATED COMPONENTS, LC
FL131	1-236-129-11	s	ENCAPSULATED COMPONENTS, LC
FL132	1-236-129-11	s	ENCAPSULATED COMPONENTS, LC
FL141	1-236-129-11	s	ENCAPSULATED COMPONENTS, LC
FL142	1-236-129-11	s	ENCAPSULATED COMPONENTS, LC
FL151	1-236-129-11	s	ENCAPSULATED COMPONENTS, LC

NOTE 1:Please see page 6-25 for the parts that are not listd in the parts list.

(CN-828A BOARD/PROCESSOR)

Ref. No. or Q'ty	Part No.	SP	Description
FL152	1-236-129-11	s	ENCAPSULATED COMPONENTS, LC
FL161	1-236-129-11	s	ENCAPSULATED COMPONENTS, LC
FL162	1-236-129-11	s	ENCAPSULATED COMPONENTS, LC
IC1	8-759-926-32	s	IC AM26LS32PC
IC2	8-759-926-32	s	IC AM26LS32PC
IC3	8-759-926-32	s	IC AM26LS32PC
IC4	8-759-926-32	s	IC AM26LS32PC
IC5	8-759-917-05	s	IC SN74HC541AN
IC6	8-759-917-05	s	IC SN74HC541AN
R11	1-215-398-00	s	METAL 110 1% 1/6W
R21	1-215-398-00	s	METAL 110 1% 1/6W
R31	1-215-398-00	s	METAL 110 1% 1/6W
R41	1-215-398-00	s	METAL 110 1% 1/6W
R51	1-215-398-00	s	METAL 110 1% 1/6W
R61	1-215-398-00	s	METAL 110 1% 1/6W
R71	1-215-398-00	s	METAL 110 1% 1/6W
R81	1-215-398-00	s	METAL 110 1% 1/6W
R91	1-215-398-00	s	METAL 110 1% 1/6W
R101	1-215-398-00	s	METAL 110 1% 1/6W
R111	1-215-398-00	s	METAL 110 1% 1/6W
R121	1-215-398-00	s	METAL 110 1% 1/6W
R131	1-215-398-00	s	METAL 110 1% 1/6W
R141	1-215-398-00	s	METAL 110 1% 1/6W
R151	1-215-398-00	s	METAL 110 1% 1/6W
R161	1-215-398-00	s	METAL 110 1% 1/6W
RB1 to RB6	1-235-195-00	s	RESISTOR BLOCK 10KX8
T1 to T16	1-437-194-21	s	TRANSFORMER, PULSE

CN-828B BOARD/PROCESSOR

Ref. No. or Q'ty	Part No.	SP	Description
1pc	A-8275-637-A	o	MOUNTED CIRCUIT BOARD, CN-828B
1pc	3-184-315-02	o	PANEL, CN-828B
4pcs	7-682-903-01	s	SCREW +PWH 3X5
2pcs	7-685-546-14	s	SCREW +BTP 3X8 TYPE2 N-S
2pcs	3-172-089-01	o	HANDLE
30pcs	7-621-259-35	s	SCREW +P 2.6X5
1pc	3-184-856-01	o	PLATE, SHIELD CN
3pcs	3-184-772-01	o	NUT, PLATE
3pcs	7-627-454-18	s	SCREW, PRECISION +K 2.6X4
C7	1-124-589-11	s	ELECT 47uF 20% 16V
C11	1-130-499-00	s	MYLAR 0.22uF 5% 50V
C12	1-130-499-00	s	MYLAR 0.22uF 5% 50V
C13	1-101-880-00	s	CERAMIC 47PF 5% 50V
C14	1-101-880-00	s	CERAMIC 47PF 5% 50V
C21	1-130-499-00	s	MYLAR 0.22uF 5% 50V
C22	1-130-499-00	s	MYLAR 0.22uF 5% 50V
C23	1-101-880-00	s	CERAMIC 47PF 5% 50V
C24	1-101-880-00	s	CERAMIC 47PF 5% 50V
C31	1-130-499-00	s	MYLAR 0.22uF 5% 50V
C32	1-130-499-00	s	MYLAR 0.22uF 5% 50V
C33	1-101-880-00	s	CERAMIC 47PF 5% 50V
C34	1-101-880-00	s	CERAMIC 47PF 5% 50V
C41	1-130-499-00	s	MYLAR 0.22uF 5% 50V
C42	1-130-499-00	s	MYLAR 0.22uF 5% 50V
C43	1-101-880-00	s	CERAMIC 47PF 5% 50V
C44	1-101-880-00	s	CERAMIC 47PF 5% 50V
C51	1-130-499-00	s	MYLAR 0.22uF 5% 50V
C52	1-130-499-00	s	MYLAR 0.22uF 5% 50V
C53	1-101-880-00	s	CERAMIC 47PF 5% 50V
C54	1-101-880-00	s	CERAMIC 47PF 5% 50V
C61	1-130-499-00	s	MYLAR 0.22uF 5% 50V
C62	1-130-499-00	s	MYLAR 0.22uF 5% 50V
C63	1-101-880-00	s	CERAMIC 47PF 5% 50V
C64	1-101-880-00	s	CERAMIC 47PF 5% 50V
C71	1-130-499-00	s	MYLAR 0.22uF 5% 50V
C72	1-130-499-00	s	MYLAR 0.22uF 5% 50V
C73	1-101-880-00	s	CERAMIC 47PF 5% 50V
C74	1-101-880-00	s	CERAMIC 47PF 5% 50V
C81	1-130-499-00	s	MYLAR 0.22uF 5% 50V
C82	1-130-499-00	s	MYLAR 0.22uF 5% 50V
C83	1-101-880-00	s	CERAMIC 47PF 5% 50V
C84	1-101-880-00	s	CERAMIC 47PF 5% 50V
C91	1-130-499-00	s	MYLAR 0.22uF 5% 50V
C92	1-130-499-00	s	MYLAR 0.22uF 5% 50V
C93	1-101-880-00	s	CERAMIC 47PF 5% 50V
C94	1-101-880-00	s	CERAMIC 47PF 5% 50V
C101	1-130-499-00	s	MYLAR 0.22uF 5% 50V
C102	1-130-499-00	s	MYLAR 0.22uF 5% 50V
C103	1-101-880-00	s	CERAMIC 47PF 5% 50V
C104	1-101-880-00	s	CERAMIC 47PF 5% 50V
C111	1-130-499-00	s	MYLAR 0.22uF 5% 50V
C112	1-130-499-00	s	MYLAR 0.22uF 5% 50V
C113	1-101-880-00	s	CERAMIC 47PF 5% 50V
C114	1-101-880-00	s	CERAMIC 47PF 5% 50V
C121	1-130-499-00	s	MYLAR 0.22uF 5% 50V
C122	1-130-499-00	s	MYLAR 0.22uF 5% 50V
C123	1-101-880-00	s	CERAMIC 47PF 5% 50V
C124	1-101-880-00	s	CERAMIC 47PF 5% 50V
C131	1-130-499-00	s	MYLAR 0.22uF 5% 50V

NOTE 1:Please see page 6-25 for the parts that are not listd in the parts list.

(CN-828B BOARD/PROCESSOR)

Ref. No. or Q'ty	Part No.	SP	Description
C132	1-130-499-00	s	MYLAR 0.22uF 5% 50V
C133	1-101-880-00	s	CERAMIC 47PF 5% 50V
C134	1-101-880-00	s	CERAMIC 47PF 5% 50V
C141	1-130-499-00	s	MYLAR 0.22uF 5% 50V
C142	1-130-499-00	s	MYLAR 0.22uF 5% 50V
C143	1-101-880-00	s	CERAMIC 47PF 5% 50V
C144	1-101-880-00	s	CERAMIC 47PF 5% 50V
C161	1-130-499-00	s	MYLAR 0.22uF 5% 50V
C162	1-130-499-00	s	MYLAR 0.22uF 5% 50V
C163	1-101-880-00	s	CERAMIC 47PF 5% 50V
C164	1-101-880-00	s	CERAMIC 47PF 5% 50V
CN1	1-506-748-11	s	CONNECTOR, DIN 96P, MALE
CN2 to CN15	1-568-006-11	s	CONNECTOR, XLR 3P, FEMALE
CN17	1-568-006-11	s	CONNECTOR, XLR 3P, FEMALE
COR1	1-564-947-21	o	PIN, SHORTING, 2P
CP1	8-719-980-37	s	DIODE DAN803
CP2	8-719-980-36	s	DIODE DAP803
CP3	8-719-980-37	s	DIODE DAN803
CP4	8-719-980-36	s	DIODE DAP803
CP5	8-719-980-37	s	DIODE DAN803
CP6	8-719-980-36	s	DIODE DAP803
CP7	8-719-980-37	s	DIODE DAN803
CP8	8-719-980-36	s	DIODE DAP803
FL1	1-424-008-11	s	FILTER, NOISE (SIGNAL LINE)
FL11	1-236-129-11	s	ENCAPSULATED COMPONENTS, LC
FL12	1-236-129-11	s	ENCAPSULATED COMPONENTS, LC
FL21	1-236-129-11	s	ENCAPSULATED COMPONENTS, LC
FL22	1-236-129-11	s	ENCAPSULATED COMPONENTS, LC
FL31	1-236-129-11	s	ENCAPSULATED COMPONENTS, LC
FL32	1-236-129-11	s	ENCAPSULATED COMPONENTS, LC
FL41	1-236-129-11	s	ENCAPSULATED COMPONENTS, LC
FL42	1-236-129-11	s	ENCAPSULATED COMPONENTS, LC
FL51	1-236-129-11	s	ENCAPSULATED COMPONENTS, LC
FL52	1-236-129-11	s	ENCAPSULATED COMPONENTS, LC
FL61	1-236-129-11	s	ENCAPSULATED COMPONENTS, LC
FL62	1-236-129-11	s	ENCAPSULATED COMPONENTS, LC
FL71	1-236-129-11	s	ENCAPSULATED COMPONENTS, LC
FL72	1-236-129-11	s	ENCAPSULATED COMPONENTS, LC
FL81	1-236-129-11	s	ENCAPSULATED COMPONENTS, LC
FL82	1-236-129-11	s	ENCAPSULATED COMPONENTS, LC
FL91	1-236-129-11	s	ENCAPSULATED COMPONENTS, LC
FL92	1-236-129-11	s	ENCAPSULATED COMPONENTS, LC
FL101	1-236-129-11	s	ENCAPSULATED COMPONENTS, LC
FL102	1-236-129-11	s	ENCAPSULATED COMPONENTS, LC
FL111	1-236-129-11	s	ENCAPSULATED COMPONENTS, LC
FL112	1-236-129-11	s	ENCAPSULATED COMPONENTS, LC
FL121	1-236-129-11	s	ENCAPSULATED COMPONENTS, LC
FL122	1-236-129-11	s	ENCAPSULATED COMPONENTS, LC
FL131	1-236-129-11	s	ENCAPSULATED COMPONENTS, LC
FL132	1-236-129-11	s	ENCAPSULATED COMPONENTS, LC
FL141	1-236-129-11	s	ENCAPSULATED COMPONENTS, LC
FL142	1-236-129-11	s	ENCAPSULATED COMPONENTS, LC
FL161	1-236-129-11	s	ENCAPSULATED COMPONENTS, LC
FL162	1-236-129-11	s	ENCAPSULATED COMPONENTS, LC

(CN-828B BOARD/PROCESSOR)

Ref. No. or Q'ty	Part No.	SP	Description
IC1	8-759-926-32	s	IC AM26LS32PC
IC2	8-759-926-32	s	IC AM26LS32PC
IC3	8-759-926-32	s	IC AM26LS32PC
IC4	8-759-926-32	s	IC AM26LS32PC
IC5	8-759-917-05	s	IC SN74HC541AN
IC6	8-759-917-05	s	IC SN74HC541AN
R11	1-215-398-00	s	METAL 110 1% 1/6W
R21	1-215-398-00	s	METAL 110 1% 1/6W
R31	1-215-398-00	s	METAL 110 1% 1/6W
R41	1-215-398-00	s	METAL 110 1% 1/6W
R51	1-215-398-00	s	METAL 110 1% 1/6W
R61	1-215-398-00	s	METAL 110 1% 1/6W
R71	1-215-398-00	s	METAL 110 1% 1/6W
R81	1-215-398-00	s	METAL 110 1% 1/6W
R91	1-215-398-00	s	METAL 110 1% 1/6W
R101	1-215-398-00	s	METAL 110 1% 1/6W
R111	1-215-398-00	s	METAL 110 1% 1/6W
R121	1-215-398-00	s	METAL 110 1% 1/6W
R131	1-215-398-00	s	METAL 110 1% 1/6W
R141	1-215-398-00	s	METAL 110 1% 1/6W
R161	1-215-398-00	s	METAL 110 1% 1/6W
RB1 to RB6	1-235-195-00	s	RESISTOR BLOCK 10KX8
T1 to T14	1-437-194-21	s	TRANSFORMER, PULSE
T16	1-437-194-21	s	TRANSFORMER, PULSE

NOTE 1:Please see page 6-25 for the parts that are not listd in the parts list.

CN-830 BOARD/PROCESSOR

Ref. No. or Q'ty	Part No.	SP	Description
1pc	A-8275-638-A	o	MOUNTED CIRCUIT BOARD, CN-830
1pc	3-184-314-02	o	PANEL, CN-830
4pcs	7-682-903-01	s	SCREW +PWH 3X5
2pcs	7-685-546-14	s	SCREW +BTP 3X8 TYPE2 N-S
2pcs	3-172-089-01	o	HANDLE
28pcs	7-621-259-35	s	SCREW +P 2.6X5
1pc	3-184-856-01	o	PLATE, SHIELD CN
3pcs	3-184-772-01	o	NUT, PLATE
3pcs	7-627-454-18	s	SCREW, PRECISION +K 2.6X4
C9	1-124-589-11	s	ELECT 47uF 20% 16V
C11	1-130-499-00	s	MYLAR 0.22uF 5% 50V
C12	1-130-499-00	s	MYLAR 0.22uF 5% 50V
C13	1-101-880-00	s	CERAMIC 47PF 5% 50V
C14	1-101-880-00	s	CERAMIC 47PF 5% 50V
C21	1-130-499-00	s	MYLAR 0.22uF 5% 50V
C22	1-130-499-00	s	MYLAR 0.22uF 5% 50V
C23	1-101-880-00	s	CERAMIC 47PF 5% 50V
C24	1-101-880-00	s	CERAMIC 47PF 5% 50V
C31	1-130-499-00	s	MYLAR 0.22uF 5% 50V
C32	1-130-499-00	s	MYLAR 0.22uF 5% 50V
C33	1-101-880-00	s	CERAMIC 47PF 5% 50V
C34	1-101-880-00	s	CERAMIC 47PF 5% 50V
C41	1-130-499-00	s	MYLAR 0.22uF 5% 50V
C42	1-130-499-00	s	MYLAR 0.22uF 5% 50V
C43	1-101-880-00	s	CERAMIC 47PF 5% 50V
C44	1-101-880-00	s	CERAMIC 47PF 5% 50V
C51	1-130-499-00	s	MYLAR 0.22uF 5% 50V
C52	1-130-499-00	s	MYLAR 0.22uF 5% 50V
C53	1-101-880-00	s	CERAMIC 47PF 5% 50V
C54	1-101-880-00	s	CERAMIC 47PF 5% 50V
C81	1-130-499-00	s	MYLAR 0.22uF 5% 50V
C82	1-130-499-00	s	MYLAR 0.22uF 5% 50V
C83	1-101-880-00	s	CERAMIC 47PF 5% 50V
C84	1-101-880-00	s	CERAMIC 47PF 5% 50V
C91	1-130-499-00	s	MYLAR 0.22uF 5% 50V
C92	1-130-499-00	s	MYLAR 0.22uF 5% 50V
C93	1-101-880-00	s	CERAMIC 47PF 5% 50V
C94	1-101-880-00	s	CERAMIC 47PF 5% 50V
C101	1-101-880-00	s	CERAMIC 47PF 5% 50V
C102	1-101-880-00	s	CERAMIC 47PF 5% 50V
C103	1-130-499-00	s	MYLAR 0.22uF 5% 50V
C104	1-130-499-00	s	MYLAR 0.22uF 5% 50V
C111	1-101-880-00	s	CERAMIC 47PF 5% 50V
C112	1-101-880-00	s	CERAMIC 47PF 5% 50V
C113	1-130-499-00	s	MYLAR 0.22uF 5% 50V
C114	1-130-499-00	s	MYLAR 0.22uF 5% 50V
C121	1-101-880-00	s	CERAMIC 47PF 5% 50V
C122	1-101-880-00	s	CERAMIC 47PF 5% 50V
C123	1-130-499-00	s	MYLAR 0.22uF 5% 50V
C124	1-130-499-00	s	MYLAR 0.22uF 5% 50V
C131	1-101-880-00	s	CERAMIC 47PF 5% 50V
C132	1-101-880-00	s	CERAMIC 47PF 5% 50V
C133	1-130-499-00	s	MYLAR 0.22uF 5% 50V
C134	1-130-499-00	s	MYLAR 0.22uF 5% 50V
C141	1-101-880-00	s	CERAMIC 47PF 5% 50V
C142	1-101-880-00	s	CERAMIC 47PF 5% 50V
C143	1-130-499-00	s	MYLAR 0.22uF 5% 50V
C144	1-130-499-00	s	MYLAR 0.22uF 5% 50V
C151	1-101-880-00	s	CERAMIC 47PF 5% 50V

NOTE 1:Please see page 6-25 for the parts that are not listd in the parts list.

(CN-830 BOARD/PROCESSOR)

Ref. No. or Q'ty	Part No.	SP	Description
C152	1-101-880-00	s	CERAMIC 47PF 5% 50V
C153	1-130-499-00	s	MYLAR 0.22uF 5% 50V
C154	1-130-499-00	s	MYLAR 0.22uF 5% 50V
C161	1-101-880-00	s	CERAMIC 47PF 5% 50V
C162	1-101-880-00	s	CERAMIC 47PF 5% 50V
C163	1-130-499-00	s	MYLAR 0.22uF 5% 50V
C164	1-130-499-00	s	MYLAR 0.22uF 5% 50V
CN1	1-506-748-11	s	CONNECTOR, DIN 96P, MALE
CN2 to CN6	1-568-006-11	s	CONNECTOR, XLR 3P, FEMALE
CN9	1-568-006-11	s	CONNECTOR, XLR 3P, FEMALE
CN10	1-568-006-11	s	CONNECTOR, XLR 3P, FEMALE
CN11 to CN17	1-568-005-11	s	CONNECTOR, XLR 3P, MALE
COR1	1-564-947-21	o	PIN, SHORTING, 2P
CP1	8-719-980-37	s	DIODE DAN803
CP2	8-719-980-36	s	DIODE DAP803
CP3	8-719-980-37	s	DIODE DAN803
CP4	8-719-980-36	s	DIODE DAP803
CP5	8-719-980-37	s	DIODE DAN803
CP6	8-719-980-36	s	DIODE DAP803
CP7	8-719-980-37	s	DIODE DAN803
CP8	8-719-980-36	s	DIODE DAP803
D91	8-719-911-19	s	DIODE 1SS119
D92	8-719-911-19	s	DIODE 1SS119
D93	8-719-911-19	s	DIODE 1SS119
D94	8-719-911-19	s	DIODE 1SS119
FL1	1-424-008-11	s	FILTER, NOISE (SIGNAL LINE)
FL11	1-236-129-11	s	ENCAPSULATED COMPONENTS, LC
FL12	1-236-129-11	s	ENCAPSULATED COMPONENTS, LC
FL21	1-236-129-11	s	ENCAPSULATED COMPONENTS, LC
FL22	1-236-129-11	s	ENCAPSULATED COMPONENTS, LC
FL31	1-236-129-11	s	ENCAPSULATED COMPONENTS, LC
FL32	1-236-129-11	s	ENCAPSULATED COMPONENTS, LC
FL41	1-236-129-11	s	ENCAPSULATED COMPONENTS, LC
FL42	1-236-129-11	s	ENCAPSULATED COMPONENTS, LC
FL51	1-236-129-11	s	ENCAPSULATED COMPONENTS, LC
FL52	1-236-129-11	s	ENCAPSULATED COMPONENTS, LC
FL81	1-236-129-11	s	ENCAPSULATED COMPONENTS, LC
FL82	1-236-129-11	s	ENCAPSULATED COMPONENTS, LC
FL91	1-236-129-11	s	ENCAPSULATED COMPONENTS, LC
FL92	1-236-129-11	s	ENCAPSULATED COMPONENTS, LC
FL101	1-236-129-11	s	ENCAPSULATED COMPONENTS, LC
FL102	1-236-129-11	s	ENCAPSULATED COMPONENTS, LC
FL111	1-236-129-11	s	ENCAPSULATED COMPONENTS, LC
FL112	1-236-129-11	s	ENCAPSULATED COMPONENTS, LC
FL121	1-236-129-11	s	ENCAPSULATED COMPONENTS, LC
FL122	1-236-129-11	s	ENCAPSULATED COMPONENTS, LC
FL131	1-236-129-11	s	ENCAPSULATED COMPONENTS, LC
FL132	1-236-129-11	s	ENCAPSULATED COMPONENTS, LC
FL141	1-236-129-11	s	ENCAPSULATED COMPONENTS, LC
FL142	1-236-129-11	s	ENCAPSULATED COMPONENTS, LC
FL151	1-236-129-11	s	ENCAPSULATED COMPONENTS, LC
FL152	1-236-129-11	s	ENCAPSULATED COMPONENTS, LC
FL161	1-236-129-11	s	ENCAPSULATED COMPONENTS, LC
FL162	1-236-129-11	s	ENCAPSULATED COMPONENTS, LC

(CN-830 BOARD/PROCESSOR)

Ref. No. or Q'ty	Part No.	SP	Description
IC1	8-759-926-32	s	IC AM26LS32PC
IC2	8-759-926-32	s	IC AM26LS32PC
IC3	8-759-926-32	s	IC AM26LS32PC
IC4	8-759-926-31	s	IC AM26LS31PC
IC5	8-759-926-31	s	IC AM26LS31PC
IC6	8-759-917-05	s	IC SN74HC541AN
IC7	8-759-917-05	s	IC SN74HC541AN
IC8	8-759-916-20	s	IC SN74HC14AN
R1	1-249-429-11	s	CARBON 10K 5% 1/4W
R2	1-249-429-11	s	CARBON 10K 5% 1/4W
R11	1-215-398-00	s	METAL 110 1% 1/6W
R21	1-215-398-00	s	METAL 110 1% 1/6W
R31	1-215-398-00	s	METAL 110 1% 1/6W
R41	1-215-398-00	s	METAL 110 1% 1/6W
R51	1-215-398-00	s	METAL 110 1% 1/6W
R81	1-215-398-00	s	METAL 110 1% 1/6W
R91	1-215-398-00	s	METAL 110 1% 1/6W
R94	1-249-429-11	s	CARBON 10K 5% 1/4W
R95	1-249-429-11	s	CARBON 10K 5% 1/4W
R101	1-249-393-11	s	CARBON 10 5% 1/4W
R102	1-249-393-11	s	CARBON 10 5% 1/4W
R111	1-249-393-11	s	CARBON 10 5% 1/4W
R112	1-249-393-11	s	CARBON 10 5% 1/4W
R121	1-249-393-11	s	CARBON 10 5% 1/4W
R122	1-249-393-11	s	CARBON 10 5% 1/4W
R131	1-249-393-11	s	CARBON 10 5% 1/4W
R132	1-249-393-11	s	CARBON 10 5% 1/4W
R141	1-249-393-11	s	CARBON 10 5% 1/4W
R142	1-249-393-11	s	CARBON 10 5% 1/4W
R151	1-249-393-11	s	CARBON 10 5% 1/4W
R152	1-249-393-11	s	CARBON 10 5% 1/4W
R161	1-249-393-11	s	CARBON 10 5% 1/4W
R162	1-249-393-11	s	CARBON 10 5% 1/4W
RB1	1-235-195-00	s	RESISTOR BLOCK 10KX8
RB2	1-235-195-00	s	RESISTOR BLOCK 10KX8
RB3	1-235-195-00	s	RESISTOR BLOCK 10KX8
RB4	1-235-195-00	s	RESISTOR BLOCK 10KX8
T1 to T5	1-437-194-21	s	TRANSFORMER, PULSE
T8 to T16	1-437-194-21	s	TRANSFORMER, PULSE

CN-831 BOARD/PROCESSOR

Ref. No. or Q'ty	Part No.	SP	Description
1pc	A-8275-639-A	o	MOUNTED CIRCUIT BOARD, CN-831
1pc	3-184-316-12	o	PANEL, CN-831
4pcs	7-682-903-01	s	SCREW +PWH 3X5
2pcs	7-685-546-14	s	SCREW +BTP 3X8 TYPE2 N-S
2pcs	3-172-089-01	o	HANDLE
32pcs	7-621-259-35	s	SCREW +P 2.6X5
1pc	3-184-856-01	o	PLATE, SHIELD CN
3pcs	3-184-772-01	o	NUT, PLATE
3pcs	7-627-454-18	s	SCREW, PRECISION +K 2.6X4
C11	1-101-880-00	s	CERAMIC 47PF 5% 50V
C12	1-101-880-00	s	CERAMIC 47PF 5% 50V
C13	1-130-499-00	s	MYLAR 0.22uF 5% 50V
C14	1-130-499-00	s	MYLAR 0.22uF 5% 50V
C21	1-101-880-00	s	CERAMIC 47PF 5% 50V
C22	1-101-880-00	s	CERAMIC 47PF 5% 50V
C23	1-130-499-00	s	MYLAR 0.22uF 5% 50V
C24	1-130-499-00	s	MYLAR 0.22uF 5% 50V
C31	1-101-880-00	s	CERAMIC 47PF 5% 50V
C32	1-101-880-00	s	CERAMIC 47PF 5% 50V
C33	1-130-499-00	s	MYLAR 0.22uF 5% 50V
C34	1-130-499-00	s	MYLAR 0.22uF 5% 50V
C41	1-101-880-00	s	CERAMIC 47PF 5% 50V
C42	1-101-880-00	s	CERAMIC 47PF 5% 50V
C43	1-130-499-00	s	MYLAR 0.22uF 5% 50V
C44	1-130-499-00	s	MYLAR 0.22uF 5% 50V
C51	1-101-880-00	s	CERAMIC 47PF 5% 50V
C52	1-101-880-00	s	CERAMIC 47PF 5% 50V
C53	1-130-499-00	s	MYLAR 0.22uF 5% 50V
C54	1-130-499-00	s	MYLAR 0.22uF 5% 50V
C55	1-130-495-00	s	FILM 0.1uF 5% 50V
C61	1-101-880-00	s	CERAMIC 47PF 5% 50V
C62	1-101-880-00	s	CERAMIC 47PF 5% 50V
C63	1-130-499-00	s	MYLAR 0.22uF 5% 50V
C64	1-130-499-00	s	MYLAR 0.22uF 5% 50V
C65	1-130-495-00	s	FILM 0.1uF 5% 50V
C71	1-101-880-00	s	CERAMIC 47PF 5% 50V
C72	1-101-880-00	s	CERAMIC 47PF 5% 50V
C73	1-130-499-00	s	MYLAR 0.22uF 5% 50V
C74	1-130-499-00	s	MYLAR 0.22uF 5% 50V
C75	1-130-495-00	s	FILM 0.1uF 5% 50V
C81	1-101-880-00	s	CERAMIC 47PF 5% 50V
C82	1-101-880-00	s	CERAMIC 47PF 5% 50V
C83	1-130-499-00	s	MYLAR 0.22uF 5% 50V
C84	1-130-499-00	s	MYLAR 0.22uF 5% 50V
C85	1-130-495-00	s	FILM 0.1uF 5% 50V
C91	1-101-880-00	s	CERAMIC 47PF 5% 50V
C92	1-101-880-00	s	CERAMIC 47PF 5% 50V
C93	1-130-499-00	s	MYLAR 0.22uF 5% 50V
C94	1-130-499-00	s	MYLAR 0.22uF 5% 50V
C95	1-130-495-00	s	FILM 0.1uF 5% 50V
C100	1-124-589-11	s	ELECT 47uF 20% 16V
C101	1-101-880-00	s	CERAMIC 47PF 5% 50V
C102	1-101-880-00	s	CERAMIC 47PF 5% 50V
C103	1-130-499-00	s	MYLAR 0.22uF 5% 50V
C104	1-130-499-00	s	MYLAR 0.22uF 5% 50V
C105	1-130-495-00	s	FILM 0.1uF 5% 50V
C111	1-101-880-00	s	CERAMIC 47PF 5% 50V
C112	1-101-880-00	s	CERAMIC 47PF 5% 50V
C113	1-130-499-00	s	MYLAR 0.22uF 5% 50V

NOTE 1:Please see page 6-25 for the parts that are not listd in the parts list.

(CN-831 BOARD/PROCESSOR)

Ref. No. or Q'ty	Part No.	SP	Description
C114	1-130-499-00	s	MYLAR 0.22uF 5% 50V
C115	1-130-495-00	s	FILM 0.1uF 5% 50V
C121	1-101-880-00	s	CERAMIC 47PF 5% 50V
C122	1-101-880-00	s	CERAMIC 47PF 5% 50V
C123	1-130-499-00	s	MYLAR 0.22uF 5% 50V
C124	1-130-499-00	s	MYLAR 0.22uF 5% 50V
C125	1-130-495-00	s	FILM 0.1uF 5% 50V
C131	1-101-880-00	s	CERAMIC 47PF 5% 50V
C132	1-101-880-00	s	CERAMIC 47PF 5% 50V
C133	1-130-499-00	s	MYLAR 0.22uF 5% 50V
C134	1-130-499-00	s	MYLAR 0.22uF 5% 50V
C135	1-130-495-00	s	FILM 0.1uF 5% 50V
C141	1-101-880-00	s	CERAMIC 47PF 5% 50V
C142	1-101-880-00	s	CERAMIC 47PF 5% 50V
C143	1-130-499-00	s	MYLAR 0.22uF 5% 50V
C144	1-130-499-00	s	MYLAR 0.22uF 5% 50V
C145	1-130-495-00	s	FILM 0.1uF 5% 50V
C151	1-101-880-00	s	CERAMIC 47PF 5% 50V
C152	1-101-880-00	s	CERAMIC 47PF 5% 50V
C153	1-130-499-00	s	MYLAR 0.22uF 5% 50V
C154	1-130-499-00	s	MYLAR 0.22uF 5% 50V
C155	1-130-495-00	s	FILM 0.1uF 5% 50V
C161	1-101-880-00	s	CERAMIC 47PF 5% 50V
C162	1-101-880-00	s	CERAMIC 47PF 5% 50V
C163	1-130-499-00	s	MYLAR 0.22uF 5% 50V
C164	1-130-499-00	s	MYLAR 0.22uF 5% 50V
C165	1-130-495-00	s	FILM 0.1uF 5% 50V
CN1	1-506-748-11	s	CONNECTOR, DIN 96P, MALE
CN2 to CN17	1-568-005-11	s	CONNECTOR, XLR 3P, MALE
COR1	1-564-947-21	o	PIN, SHORTING, 2P
CP1	8-719-980-37	s	DIODE DAN803
CP2	8-719-980-36	s	DIODE DAP803
CP3	8-719-980-37	s	DIODE DAN803
CP4	8-719-980-36	s	DIODE DAP803
CP5	8-719-980-37	s	DIODE DAN803
CP6	8-719-980-36	s	DIODE DAP803
CP7	8-719-980-37	s	DIODE DAN803
CP8	8-719-980-36	s	DIODE DAP803
FL1	1-424-008-11	s	FILTER, NOISE (SIGNAL LINE)
FL11	1-236-129-11	s	ENCAPSULATED COMPONENTS, LC
FL12	1-236-129-11	s	ENCAPSULATED COMPONENTS, LC
FL21	1-236-129-11	s	ENCAPSULATED COMPONENTS, LC
FL22	1-236-129-11	s	ENCAPSULATED COMPONENTS, LC
FL31	1-236-129-11	s	ENCAPSULATED COMPONENTS, LC
FL32	1-236-129-11	s	ENCAPSULATED COMPONENTS, LC
FL41	1-236-129-11	s	ENCAPSULATED COMPONENTS, LC
FL42	1-236-129-11	s	ENCAPSULATED COMPONENTS, LC
FL51	1-236-129-11	s	ENCAPSULATED COMPONENTS, LC
FL52	1-236-129-11	s	ENCAPSULATED COMPONENTS, LC
FL61	1-236-129-11	s	ENCAPSULATED COMPONENTS, LC
FL62	1-236-129-11	s	ENCAPSULATED COMPONENTS, LC
FL71	1-236-129-11	s	ENCAPSULATED COMPONENTS, LC
FL72	1-236-129-11	s	ENCAPSULATED COMPONENTS, LC
FL81	1-236-129-11	s	ENCAPSULATED COMPONENTS, LC
FL82	1-236-129-11	s	ENCAPSULATED COMPONENTS, LC
FL91	1-236-129-11	s	ENCAPSULATED COMPONENTS, LC

NOTE 1:Please see page 6-25 for the parts that are not listd in the parts list.

(CN-831 BOARD/PROCESSOR)

Ref. No. or Q'ty	Part No.	SP	Description
FL92	1-236-129-11	s	ENCAPSULATED COMPONENTS, LC
FL101	1-236-129-11	s	ENCAPSULATED COMPONENTS, LC
FL102	1-236-129-11	s	ENCAPSULATED COMPONENTS, LC
FL111	1-236-129-11	s	ENCAPSULATED COMPONENTS, LC
FL112	1-236-129-11	s	ENCAPSULATED COMPONENTS, LC
FL121	1-236-129-11	s	ENCAPSULATED COMPONENTS, LC
FL122	1-236-129-11	s	ENCAPSULATED COMPONENTS, LC
FL131	1-236-129-11	s	ENCAPSULATED COMPONENTS, LC
FL132	1-236-129-11	s	ENCAPSULATED COMPONENTS, LC
FL141	1-236-129-11	s	ENCAPSULATED COMPONENTS, LC
FL142	1-236-129-11	s	ENCAPSULATED COMPONENTS, LC
FL151	1-236-129-11	s	ENCAPSULATED COMPONENTS, LC
FL152	1-236-129-11	s	ENCAPSULATED COMPONENTS, LC
FL161	1-236-129-11	s	ENCAPSULATED COMPONENTS, LC
FL162	1-236-129-11	s	ENCAPSULATED COMPONENTS, LC
IC1	8-759-916-20	s	IC SN74HC14AN
IC2	8-759-916-20	s	IC SN74HC14AN
IC3	8-759-916-20	s	IC SN74HC14AN
IC4	8-759-916-20	s	IC SN74HC14AN
IC5	8-759-916-50	s	IC SN74HC157N
IC6	8-759-916-50	s	IC SN74HC157N
IC7	8-759-926-31	s	IC AM26LS31PC
IC8	8-759-926-31	s	IC AM26LS31PC
IC9	8-759-926-31	s	IC AM26LS31PC
IC10	8-759-926-31	s	IC AM26LS31PC
R11	1-249-393-11	s	CARBON 10 5% 1/4W
R12	1-249-393-11	s	CARBON 10 5% 1/4W
R21	1-249-393-11	s	CARBON 10 5% 1/4W
R22	1-249-393-11	s	CARBON 10 5% 1/4W
R31	1-249-393-11	s	CARBON 10 5% 1/4W
R32	1-249-393-11	s	CARBON 10 5% 1/4W
R41	1-249-393-11	s	CARBON 10 5% 1/4W
R42	1-249-393-11	s	CARBON 10 5% 1/4W
R52	1-249-393-11	s	CARBON 10 5% 1/4W
R62	1-249-393-11	s	CARBON 10 5% 1/4W
R72	1-249-393-11	s	CARBON 10 5% 1/4W
R82	1-249-393-11	s	CARBON 10 5% 1/4W
R92	1-249-393-11	s	CARBON 10 5% 1/4W
R102	1-249-393-11	s	CARBON 10 5% 1/4W
R112	1-249-393-11	s	CARBON 10 5% 1/4W
R122	1-249-393-11	s	CARBON 10 5% 1/4W
R132	1-249-393-11	s	CARBON 10 5% 1/4W
R142	1-249-393-11	s	CARBON 10 5% 1/4W
R152	1-249-393-11	s	CARBON 10 5% 1/4W
R162	1-249-393-11	s	CARBON 10 5% 1/4W
RB1	1-235-195-00	s	RESISTOR BLOCK 10KX8
RB2	1-235-195-00	s	RESISTOR BLOCK 10KX8
RB3	1-235-195-00	s	RESISTOR BLOCK 10KX8
T1 to T16	1-437-194-21	s	TRANSFORMER, PULSE

CN-832 BOARD/PROCESSOR

Ref. No. or Q'ty	Part No.	SP	Description
1pc	A-8275-640-A	o	MOUNTED CIRCUIT BOARD, CN-832A (FOR UC/EK)
	A-8375-642-A	o	MOUNTED CIRCUIT BOARD, CN-832B (FOR J)
1pc	3-184-313-01	o	PANEL, CN-832
2pcs	3-172-089-01	o	HANDLE
4pcs	7-682-903-01	s	SCREW +PWH 3X5
2pcs	7-685-546-14	s	SCREW +BTP 3X8 TYPE2 N-S
2pcs	7-682-547-04	s	SCREW +B 3X6
4pcs	7-621-259-35	s	SCREW +P 2.6X5
1pc	3-184-856-01	o	PLATE, SHIELD CN
3pcs	3-184-772-01	o	NUT, PLATE
3pcs	7-627-454-18	s	SCREW, PRECISION +K 2.6X4
CN1	1-506-748-11	s	CONNECTOR, DIN 96P, MALE
CN2	1-563-773-11	s	CONNECTOR, D-SUB 37P, FEMALE
CN3	1-568-005-11	s	CONNECTOR, XLR 3P, MALE(FOR UC/EK)
	1-568-006-11	s	CONNECTOR, XLR 3P, FEMALE (FOR J)
CN4	1-568-005-11	s	CONNECTOR, XLR 3P, MALE(FOR UC/EK)
	1-568-006-11	s	CONNECTOR, XLR 3P, FEMALE (FOR J)
COP5	1-562-579-21	s	PLUG, SHORTING
COP6	1-562-579-21	s	PLUG, SHORTING
COP7	1-562-579-21	s	PLUG, SHORTING
COP8	1-562-579-21	s	PLUG, SHORTING
COR5	1-564-948-21	o	PIN, SHORTING
COR6	1-564-948-21	o	PIN, SHORTING
COR7	1-564-948-21	o	PIN, SHORTING
COR8	1-564-948-21	o	PIN, SHORTING
FL1 to FL20	1-236-163-11	s	ENCAPSULATED COMPONENT

CPU-144 BOARD/PROCESSOR

Ref. No. or Q'ty	Part No.	SP	Description
1pc	A-8275-631-A	o	MOUNTED CIRCUIT BOARD, CPU-144
2pcs	2-146-577-01	o	LEVER (1), PC BOARD
2pcs	3-174-923-01	o	LEVER (2), PC BOARD
4pcs	7-626-320-11	s	PIN, SPRING 3X8
4pcs	7-685-546-14	s	SCREW +BTP 3X8 TYPE2 N-S
7pcs	7-682-903-01	s	SCREW +PWH 3X5
4pcs	7-682-547-04	s	SCREW +B 3X6
C3	1-124-910-11	s	ELECT 47uF 20% 50V
C4	1-124-910-11	s	ELECT 47uF 20% 50V
C5	1-136-165-00	s	FILM 0.1uF 5% 50V
C6	1-136-165-00	s	FILM 0.1uF 5% 50V
C7	1-126-101-11	s	ELECT 100uF 20% 16V
C8	1-126-101-11	s	ELECT 100uF 20% 16V
C9	1-124-910-11	s	ELECT 47uF 20% 50V
C10	1-124-910-11	s	ELECT 47uF 20% 50V
C11	1-136-165-00	s	FILM 0.1uF 5% 50V
C12	1-136-165-00	s	FILM 0.1uF 5% 50V
C13	1-126-101-11	s	ELECT 100uF 20% 16V
C14	1-126-101-11	s	ELECT 100uF 20% 16V
C15	1-124-910-11	s	ELECT 47uF 20% 50V
C16	1-124-910-11	s	ELECT 47uF 20% 50V
C17	1-136-165-00	s	FILM 0.1uF 5% 50V
C18	1-136-165-00	s	FILM 0.1uF 5% 50V
C19	1-126-101-11	s	ELECT 100uF 20% 16V
C20	1-126-101-11	s	ELECT 100uF 20% 16V
C21	1-124-910-11	s	ELECT 47uF 20% 50V
C22	1-124-910-11	s	ELECT 47uF 20% 50V
C23	1-136-165-00	s	FILM 0.1uF 5% 50V
C24	1-136-165-00	s	FILM 0.1uF 5% 50V
C25	1-126-101-11	s	ELECT 100uF 20% 16V
C26	1-126-101-11	s	ELECT 100uF 20% 16V
C27	1-124-918-11	s	ELECT 47uF 20% 63V
C28	1-124-918-11	s	ELECT 47uF 20% 63V
C29	1-136-165-00	s	FILM 0.1uF 5% 50V
C30	1-136-165-00	s	FILM 0.1uF 5% 50V
C31	1-124-918-11	s	ELECT 47uF 20% 63V
C32	1-124-918-11	s	ELECT 47uF 20% 63V
C51	1-124-910-11	s	ELECT 47uF 20% 50V
C52	1-124-910-11	s	ELECT 47uF 20% 50V
C53	1-136-165-00	s	FILM 0.1uF 5% 50V
C54	1-136-165-00	s	FILM 0.1uF 5% 50V
C55	1-126-101-11	s	ELECT 100uF 20% 16V
C56	1-126-101-11	s	ELECT 100uF 20% 16V
C57	1-124-910-11	s	ELECT 47uF 20% 50V
C58	1-124-910-11	s	ELECT 47uF 20% 50V
C59	1-136-165-00	s	FILM 0.1uF 5% 50V
C60	1-136-165-00	s	FILM 0.1uF 5% 50V
C61	1-126-101-11	s	ELECT 100uF 20% 16V
C62	1-126-101-11	s	ELECT 100uF 20% 16V
C63	1-124-910-11	s	ELECT 47uF 20% 50V
C64	1-124-910-11	s	ELECT 47uF 20% 50V
C65	1-136-165-00	s	FILM 0.1uF 5% 50V
C66	1-136-165-00	s	FILM 0.1uF 5% 50V
C67	1-126-101-11	s	ELECT 100uF 20% 16V
C68	1-126-101-11	s	ELECT 100uF 20% 16V
C69	1-124-910-11	s	ELECT 47uF 20% 50V
C70	1-124-910-11	s	ELECT 47uF 20% 50V
C71	1-136-165-00	s	FILM 0.1uF 5% 50V

NOTE 1:Please see page 6-25 for the parts that are not listd in the parts list.

(CPU-144 BOARD/PROCESSOR)

Ref. No. or Q'ty	Part No.	SP	Description
C72	1-136-165-00	s	FILM 0.1uF 5% 50V
C73	1-126-101-11	s	ELECT 100uF 20% 16V
C74	1-126-101-11	s	ELECT 100uF 20% 16V
C100 to C112	1-163-038-00	s	CAP, CHIP 0.1uF 25V
C114 to C120	1-163-038-00	s	CAP, CHIP 0.1uF 25V
C121 to C128	1-102-959-00	s	CERAMIC 22PF 5% 50V
C129	1-126-163-11	s	ELECT 4.7uF 20% 50V
C130	1-126-163-11	s	ELECT 4.7uF 20% 50V
C131	1-126-163-11	s	ELECT 4.7uF 20% 50V
C132	1-126-163-11	s	ELECT 4.7uF 20% 50V
C133	1-163-038-00	s	CAP, CHIP 0.1uF 25V
C134	1-126-157-11	s	ELECT 10uF 20% 16V
C136	1-102-963-00	s	CERAMIC 33PF 5% 50V
C137	1-130-495-00	s	MYLAR 0.1uF 5% 50V
C140	1-163-038-00	s	CAP, CHIP 0.1uF 25V
C141	1-126-925-11	s	ELECT 470uF 20% 10V
C142	1-126-925-11	s	ELECT 470uF 20% 10V
C143	1-163-038-00	s	CAP, CHIP 0.1uF 25V
C151	1-163-038-00	s	CAP, CHIP 0.1uF 25V
C152	1-163-038-00	s	CAP, CHIP 0.1uF 25V
C155 to C163	1-163-038-00	s	CAP, CHIP 0.1uF 25V
C164	1-125-447-11	s	DOUBLE LAYERS 1FARAD 5.5V
C165	1-125-447-11	s	DOUBLE LAYERS 1FARAD 5.5V
C201 to C207	1-163-038-00	s	CAP, CHIP 0.1uF 25V
C209 to C227	1-163-038-00	s	CAP, CHIP 0.1uF 25V
C270	1-163-038-00	s	CAP, CHIP 0.1uF 25V
C301	1-126-157-11	s	ELECT 10uF 20% 16V
C303 to C320	1-163-038-00	s	CAP, CHIP 0.1uF 25V
C331	1-131-368-00	s	TANTALUM 3.3uF 10% 16V
C332	1-163-038-00	s	CAP, CHIP 0.1uF 25V
C333	1-164-085-11	s	CERAMIC 0.001uF 10% 50V
C334	1-130-495-00	s	MYLAR 0.1uF 5% 50V
C335	1-124-584-00	s	ELECT 100uF 20% 10V
C336	1-163-038-00	s	CAP, CHIP 0.1uF 25V
C337	1-163-038-00	s	CAP, CHIP 0.1uF 25V
C338	1-102-963-00	s	CERAMIC 33PF 5% 50V
C339	1-163-038-00	s	CAP, CHIP 0.1uF 25V
C340	1-163-038-00	s	CAP, CHIP 0.1uF 25V
C341	1-126-789-11	s	ELECT 33uF 20% 25V
C342	1-136-165-00	s	FILM 0.1uF 5% 50V
C343	1-136-165-00	s	FILM 0.1uF 5% 50V
C344	1-136-355-11	s	FILM 330PF 5% 100V
C345	1-106-343-00	s	FILM 0.001uF 5% 200V
C346	1-163-038-00	s	CAP, CHIP 0.1uF 25V
C347	1-126-789-11	s	ELECT 33uF 20% 25V
C348	1-136-165-00	s	FILM 0.1uF 5% 50V
C349	1-162-765-11	s	CERAMIC 0.001uF 5% 50V
C350	1-102-951-00	s	CERAMIC 15PF 5% 50V
C351	1-162-765-11	s	CERAMIC 0.001uF 5% 50V
C352	1-102-951-00	s	CERAMIC 15PF 5% 50V

NOTE 1:Please see page 6-25 for the parts that are not listd in the parts list.

(CPU-144 BOARD/PROCESSOR)

Ref. No. or Q'ty	Part No.	SP	Description
C353	1-162-765-11	s	CERAMIC 0.001uF 5% 50V
C354	1-102-951-00	s	CERAMIC 15PF 5% 50V
C355	1-130-469-00	s	FILM 680PF 5% 50V
C356	1-126-160-11	s	ELECT 1uF 20% 50V
C357	1-124-584-00	s	ELECT 100uF 20% 10V
C358	1-101-880-00	s	CERAMIC 47PF 5% 50V
C359	1-126-160-11	s	ELECT 1uF 20% 50V
C371	1-124-584-00	s	ELECT 100uF 20% 10V
C372	1-124-584-00	s	ELECT 100uF 20% 10V
C373	1-126-022-11	s	ELECT 47uF 20% 25V
C374	1-163-038-00	s	CAP, CHIP 0.1uF 25V
C375	1-126-022-11	s	ELECT 47uF 20% 25V
C376	1-163-038-00	s	CAP, CHIP 0.1uF 25V
C377	1-126-022-11	s	ELECT 47uF 20% 25V
C378	1-163-038-00	s	CAP, CHIP 0.1uF 25V
C379	1-126-022-11	s	ELECT 47uF 20% 25V
C380	1-163-038-00	s	CAP, CHIP 0.1uF 25V
C386	1-163-038-00	s	CAP, CHIP 0.1uF 25V
C387	1-163-038-00	s	CAP, CHIP 0.1uF 25V
C388	1-163-038-00	s	CAP, CHIP 0.1uF 25V
C390	1-163-038-00	s	CAP, CHIP 0.1uF 25V
C401 to C405	1-163-038-00	s	CAP, CHIP 0.1uF 25V
C407 to C420	1-163-038-00	s	CAP, CHIP 0.1uF 25V
C421	1-130-495-00	s	MYLAR 0.1uF 5% 50V
C422	1-130-495-00	s	MYLAR 0.1uF 5% 50V
C423	1-136-165-00	s	FILM 0.1uF 5% 50V
C424	1-130-471-00	s	MYLAR 0.001uF 5% 50V
C425	1-163-038-00	s	CAP, CHIP 0.1uF 25V
C426	1-136-165-00	s	FILM 0.1uF 5% 50V
C427	1-130-471-00	s	MYLAR 0.001uF 5% 50V
C428	1-163-038-00	s	CAP, CHIP 0.1uF 25V
C429	1-162-670-11	s	CERAMIC 18PF 5% 50V
C430	1-124-584-00	s	ELECT 100uF 20% 10V
C431	1-124-584-00	s	ELECT 100uF 20% 10V
C432	1-124-584-00	s	ELECT 100uF 20% 10V
C433	1-124-584-00	s	ELECT 100uF 20% 10V
C434	1-126-925-11	s	ELECT 470uF 20% 10V
C435	1-124-584-00	s	ELECT 100uF 20% 10V
C451 to C463	1-163-038-00	s	CAP, CHIP 0.1uF 25V
C467	1-163-038-00	s	CAP, CHIP 0.1uF 25V
C470	1-163-038-00	s	CAP, CHIP 0.1uF 25V
C501 to C518	1-163-038-00	s	CAP, CHIP 0.1uF 25V
C601 to C617	1-163-038-00	s	CAP, CHIP 0.1uF 25V
C701	1-163-038-00	s	CAP, CHIP 0.1uF 25V
C702	1-126-101-11	s	ELECT 100uF 20% 16V
C703	1-136-165-00	s	FILM 0.1uF 5% 50V
C704	1-126-101-11	s	ELECT 100uF 20% 16V
C705	1-136-165-00	s	FILM 0.1uF 5% 50V
C706	1-126-101-11	s	ELECT 100uF 20% 16V
C707 to C711	1-136-165-00	s	FILM 0.1uF 5% 50V

(CPU-144 BOARD/PROCESSOR)

Ref. No. or Q'ty	Part No.	SP	Description
C712	1-126-101-11	s	ELECT 100uF 20% 16V
C713	1-136-165-00	s	FILM 0.1uF 5% 50V
C714	1-126-101-11	s	ELECT 100uF 20% 16V
C715	1-136-165-00	s	FILM 0.1uF 5% 50V
C716	1-126-101-11	s	ELECT 100uF 20% 16V
C717 to C721	1-136-165-00	s	FILM 0.1uF 5% 50V
C722	1-126-101-11	s	ELECT 100uF 20% 16V
C723	1-136-165-00	s	FILM 0.1uF 5% 50V
C724	1-126-101-11	s	ELECT 100uF 20% 16V
C725	1-136-165-00	s	FILM 0.1uF 5% 50V
C726	1-126-101-11	s	ELECT 100uF 20% 16V
C727 to C731	1-136-165-00	s	FILM 0.1uF 5% 50V
C732	1-126-101-11	s	ELECT 100uF 20% 16V
C733	1-136-165-00	s	FILM 0.1uF 5% 50V
C734	1-126-101-11	s	ELECT 100uF 20% 16V
C735	1-136-165-00	s	FILM 0.1uF 5% 50V
C736	1-126-101-11	s	ELECT 100uF 20% 16V
C737 to C742	1-136-165-00	s	FILM 0.1uF 5% 50V
C751 to C759	1-136-165-00	s	FILM 0.1uF 5% 50V
C760	1-126-101-11	s	ELECT 100uF 20% 16V
C761	1-136-165-00	s	FILM 0.1uF 5% 50V
C762	1-126-101-11	s	ELECT 100uF 20% 16V
C763	1-136-165-00	s	FILM 0.1uF 5% 50V
C764	1-126-101-11	s	ELECT 100uF 20% 16V
C765 to C775	1-136-165-00	s	FILM 0.1uF 5% 50V
C766	1-126-101-11	s	ELECT 100uF 20% 16V
C767	1-136-165-00	s	FILM 0.1uF 5% 50V
C776	1-126-101-11	s	ELECT 100uF 20% 16V
C777	1-136-165-00	s	FILM 0.1uF 5% 50V
C778	1-126-101-11	s	ELECT 100uF 20% 16V
C779	1-136-165-00	s	FILM 0.1uF 5% 50V
C780	1-126-101-11	s	ELECT 100uF 20% 16V
C781	1-136-165-00	s	FILM 0.1uF 5% 50V
C782	1-126-101-11	s	ELECT 100uF 20% 16V
C783	1-136-165-00	s	FILM 0.1uF 5% 50V
C784	1-126-101-11	s	ELECT 100uF 20% 16V
C785	1-136-165-00	s	FILM 0.1uF 5% 50V
C786	1-126-101-11	s	ELECT 100uF 20% 16V
C787	1-136-165-00	s	FILM 0.1uF 5% 50V
C788	1-126-101-11	s	ELECT 100uF 20% 16V
C789	1-136-165-00	s	FILM 0.1uF 5% 50V
C790	1-126-101-11	s	ELECT 100uF 20% 16V
C791	1-136-165-00	s	FILM 0.1uF 5% 50V
C792	1-136-165-00	s	FILM 0.1uF 5% 50V
C801	1-130-474-00	s	MYLAR 0.0018uF 5% 50V
C802	1-136-165-00	s	FILM 0.1uF 5% 50V
C803	1-136-165-00	s	FILM 0.1uF 5% 50V
C804	1-136-165-00	s	FILM 0.1uF 5% 50V
C805	1-136-165-00	s	FILM 0.1uF 5% 50V
C806	1-130-477-00	s	MYLAR 0.0033uF 5% 50V
C807	1-130-477-00	s	MYLAR 0.0033uF 5% 50V
C808	1-130-477-00	s	MYLAR 0.0033uF 5% 50V

(CPU-144 BOARD/PROCESSOR)

Ref. No. or Q'ty	Part No.	SP	Description
C809	1-130-495-00	s	MYLAR 0.1uF 5% 50V
C810	1-130-495-00	s	MYLAR 0.1uF 5% 50V
C811	1-126-941-11	s	ELECT 470uF 20% 25V
C812	1-126-941-11	s	ELECT 470uF 20% 25V
C821	1-130-474-00	s	MYLAR 0.0018uF 5% 50V
C822	1-136-165-00	s	FILM 0.1uF 5% 50V
C823	1-136-165-00	s	FILM 0.1uF 5% 50V
C824	1-136-165-00	s	FILM 0.1uF 5% 50V
C825	1-136-165-00	s	FILM 0.1uF 5% 50V
C826	1-130-477-00	s	MYLAR 0.0033uF 5% 50V
C827	1-130-477-00	s	MYLAR 0.0033uF 5% 50V
C828	1-130-477-00	s	MYLAR 0.0033uF 5% 50V
C829	1-130-495-00	s	MYLAR 0.1uF 5% 50V
C830	1-130-495-00	s	MYLAR 0.1uF 5% 50V
C831	1-126-941-11	s	ELECT 470uF 20% 25V
C832	1-126-941-11	s	ELECT 470uF 20% 25V
C841	1-130-474-00	s	MYLAR 0.0018uF 5% 50V
C842	1-136-165-00	s	FILM 0.1uF 5% 50V
C843	1-136-165-00	s	FILM 0.1uF 5% 50V
C844	1-136-165-00	s	FILM 0.1uF 5% 50V
C845	1-136-165-00	s	FILM 0.1uF 5% 50V
C846	1-130-477-00	s	MYLAR 0.0033uF 5% 50V
C847	1-130-477-00	s	MYLAR 0.0033uF 5% 50V
C848	1-130-477-00	s	MYLAR 0.0033uF 5% 50V
C849	1-130-495-00	s	MYLAR 0.1uF 5% 50V
C850	1-130-495-00	s	MYLAR 0.1uF 5% 50V
C851	1-126-941-11	s	ELECT 470uF 20% 25V
C852	1-126-941-11	s	ELECT 470uF 20% 25V
C861	1-130-474-00	s	MYLAR 0.0018uF 5% 50V
C862	1-136-165-00	s	FILM 0.1uF 5% 50V
C863	1-136-165-00	s	FILM 0.1uF 5% 50V
C864	1-136-165-00	s	FILM 0.1uF 5% 50V
C865	1-136-165-00	s	FILM 0.1uF 5% 50V
C866	1-130-477-00	s	MYLAR 0.0033uF 5% 50V
C867	1-130-477-00	s	MYLAR 0.0033uF 5% 50V
C868	1-130-477-00	s	MYLAR 0.0033uF 5% 50V
C869	1-130-495-00	s	MYLAR 0.1uF 5% 50V
C870	1-130-495-00	s	MYLAR 0.1uF 5% 50V
C871	1-126-941-11	s	ELECT 470uF 20% 25V
C872	1-126-941-11	s	ELECT 470uF 20% 25V
C881	1-130-474-00	s	MYLAR 0.0018uF 5% 50V
C882	1-136-165-00	s	FILM 0.1uF 5% 50V
C883	1-136-165-00	s	FILM 0.1uF 5% 50V
C884	1-136-165-00	s	FILM 0.1uF 5% 50V
C885	1-136-165-00	s	FILM 0.1uF 5% 50V
C886	1-130-477-00	s	MYLAR 0.0033uF 5% 50V
C887	1-130-477-00	s	MYLAR 0.0033uF 5% 50V
C888	1-130-477-00	s	MYLAR 0.0033uF 5% 50V
C889	1-130-495-00	s	MYLAR 0.1uF 5% 50V
C890	1-130-495-00	s	MYLAR 0.1uF 5% 50V
C891	1-126-941-11	s	ELECT 470uF 20% 25V
C892	1-126-941-11	s	ELECT 470uF 20% 25V
C901	1-130-474-00	s	MYLAR 0.0018uF 5% 50V
C902	1-136-165-00	s	FILM 0.1uF 5% 50V
C903	1-136-165-00	s	FILM 0.1uF 5% 50V
C904	1-136-165-00	s	FILM 0.1uF 5% 50V
C905	1-136-165-00	s	FILM 0.1uF 5% 50V
C906	1-130-477-00	s	MYLAR 0.0033uF 5% 50V
C907	1-130-477-00	s	MYLAR 0.0033uF 5% 50V

NOTE 1:Please see page 6-25 for the parts that are not listd in the parts list.

(CPU-144 BOARD/PROCESSOR)

Ref. No. or Q'ty	Part No.	SP	Description
C908	1-130-477-00	s	MYLAR 0.0033uF 5% 50V
C909	1-130-495-00	s	MYLAR 0.1uF 5% 50V
C910	1-130-495-00	s	MYLAR 0.1uF 5% 50V
C911	1-126-941-11	s	ELECT 470uF 20% 25V
C912	1-126-941-11	s	ELECT 470uF 20% 25V
C921	1-130-474-00	s	MYLAR 0.0018uF 5% 50V
C922	1-136-165-00	s	FILM 0.1uF 5% 50V
C923	1-136-165-00	s	FILM 0.1uF 5% 50V
C924	1-136-165-00	s	FILM 0.1uF 5% 50V
C925	1-136-165-00	s	FILM 0.1uF 5% 50V
C926	1-130-477-00	s	MYLAR 0.0033uF 5% 50V
C927	1-130-477-00	s	MYLAR 0.0033uF 5% 50V
C928	1-130-477-00	s	MYLAR 0.0033uF 5% 50V
C929	1-130-495-00	s	MYLAR 0.1uF 5% 50V
C930	1-130-495-00	s	MYLAR 0.1uF 5% 50V
C931	1-126-941-11	s	ELECT 470uF 20% 25V
C932	1-126-941-11	s	ELECT 470uF 20% 25V
C941	1-130-474-00	s	MYLAR 0.0018uF 5% 50V
C942	1-136-165-00	s	FILM 0.1uF 5% 50V
C943	1-136-165-00	s	FILM 0.1uF 5% 50V
C944	1-136-165-00	s	FILM 0.1uF 5% 50V
C945	1-136-165-00	s	FILM 0.1uF 5% 50V
C946	1-130-477-00	s	MYLAR 0.0033uF 5% 50V
C947	1-130-477-00	s	MYLAR 0.0033uF 5% 50V
C948	1-130-477-00	s	MYLAR 0.0033uF 5% 50V
C949	1-130-495-00	s	MYLAR 0.1uF 5% 50V
C950	1-130-495-00	s	MYLAR 0.1uF 5% 50V
C951	1-126-941-11	s	ELECT 470uF 20% 25V
C952	1-126-941-11	s	ELECT 470uF 20% 25V
C961	1-130-495-00	s	MYLAR 0.1uF 5% 50V
C962	1-130-495-00	s	MYLAR 0.1uF 5% 50V
C963	1-126-101-11	s	ELECT 100uF 20% 16V
C964	1-126-101-11	s	ELECT 100uF 20% 16V
C965	1-126-101-11	s	ELECT 100uF 20% 16V
C966	1-126-101-11	s	ELECT 100uF 20% 16V
C967	1-124-913-11	s	ELECT 470uF 20% 50V
C968	1-124-913-11	s	ELECT 470uF 20% 50V
C969	1-124-913-11	s	ELECT 470uF 20% 50V
C970	1-124-913-11	s	ELECT 470uF 20% 50V
C981	1-130-495-00	s	MYLAR 0.1uF 5% 50V
C982	1-130-495-00	s	MYLAR 0.1uF 5% 50V
C983	1-126-101-11	s	ELECT 100uF 20% 16V
C984	1-126-101-11	s	ELECT 100uF 20% 16V
C985	1-126-101-11	s	ELECT 100uF 20% 16V
C986	1-126-101-11	s	ELECT 100uF 20% 16V
C987	1-124-913-11	s	ELECT 470uF 20% 50V
C988	1-124-913-11	s	ELECT 470uF 20% 50V
C989	1-124-913-11	s	ELECT 470uF 20% 50V
C990	1-124-913-11	s	ELECT 470uF 20% 50V
CN1	1-506-748-11	s	CONNECTOR, DIN 96P, MALE
CN2	1-506-748-11	s	CONNECTOR, DIN 96P, MALE
CN3	1-563-770-11	s	CONNECTOR, D-SUB 9P, FEMALE
CN4	1-563-770-11	s	CONNECTOR, D-SUB 9P, FEMALE
CNI100	1-526-816-21	s	SOCKET, IC (DP) 24P
CNI102	1-526-656-00	s	SOCKET, IC (DP) 20P
CNI116	1-526-816-21	s	SOCKET, IC (DP) 24P
CNI117	1-526-816-21	s	SOCKET, IC (DP) 24P
CNI151	1-526-662-21	o	SOCKET, IC (DP) 40P

(CPU-144 BOARD/PROCESSOR)

Ref. No. or Q'ty	Part No.	SP	Description
CNI152	1-526-662-21	o	SOCKET, IC (DP) 40P
CNI316	1-526-656-00	s	SOCKET, IC (DP) 20P
CNI457	1-526-816-21	s	SOCKET, IC (DP) 24P
CNI501	1-526-816-21	s	SOCKET, IC (DP) 24P
COR151	1-564-947-21	o	PIN, SHORTING, 2P
COR152	1-564-947-21	o	PIN, SHORTING, 2P
CP101	8-759-939-39	s	IC DAN801
CP102	8-759-939-38	s	IC DAP801
D101	8-719-812-31	s	LED TLR123, RED
D102	8-719-812-31	s	LED TLR123, RED
D103 to D110	8-719-812-43	s	LED TLG124A, GRN
D111	8-719-911-19	s	DIODE 1SS119
D112	8-719-911-19	s	DIODE 1SS119
D151	8-719-987-87	s	DIODE ERA85-009
D201 to D208	8-719-812-43	s	LED TLG124A, GRN
D301	8-719-911-19	s	DIODE 1SS119
D302	8-719-911-19	s	DIODE 1SS119
D303	8-719-911-19	s	DIODE 1SS119
D304	8-719-911-19	s	DIODE 1SS119
D305	8-719-109-85	s	DIODE RD5.1ES-B2
D306	8-719-911-19	s	DIODE 1SS119
D307	8-719-032-05	s	DIODE KV1460TL00
D308	8-719-032-05	s	DIODE KV1460TL00
D309	8-719-032-05	s	DIODE KV1460TL00
D310	8-719-911-19	s	DIODE 1SS119
D451	8-719-812-42	s	DIODE TLY124
D501 to D506	8-719-812-42	s	DIODE TLY124
D507	8-719-812-43	s	LED TLG124A, GRN
D508	8-719-812-43	s	LED TLG124A, GRN
D961	8-719-911-19	s	DIODE 1SS119
D962	8-719-911-19	s	DIODE 1SS119
D963	8-719-911-19	s	DIODE 1SS119
D964	8-719-911-19	s	DIODE 1SS119
D965	8-719-110-47	s	DIODE RD18ESB
D966	8-719-110-47	s	DIODE RD18ESB
D967	8-719-110-47	s	DIODE RD18ESB
D968	8-719-110-47	s	DIODE RD18ESB
D969	8-719-911-19	s	DIODE 1SS119
D981	8-719-911-19	s	DIODE 1SS119
D982	8-719-911-19	s	DIODE 1SS119
D983	8-719-911-19	s	DIODE 1SS119
D984	8-719-911-19	s	DIODE 1SS119
D985	8-719-110-47	s	DIODE RD18ESB
D986	8-719-110-47	s	DIODE RD18ESB
D987	8-719-110-47	s	DIODE RD18ESB
D988	8-719-110-47	s	DIODE RD18ESB
D989	8-719-911-19	s	DIODE 1SS119
FL1	1-424-008-11	s	FILTER, NOISE (SIGNAL LINE)
FL2	1-424-008-11	s	FILTER, NOISE (SIGNAL LINE)
FL11	1-424-008-11	s	FILTER, NOISE (SIGNAL LINE)
FL12	1-424-008-11	s	FILTER, NOISE (SIGNAL LINE)
FL13	1-424-008-11	s	FILTER, NOISE (SIGNAL LINE)
FL54	1-424-008-11	s	FILTER, NOISE (SIGNAL LINE)
FL55	1-424-008-11	s	FILTER, NOISE (SIGNAL LINE)

NOTE 1:Please see page 6-25 for the parts that are not listd in the parts list.

(CPU-144 BOARD/PROCESSOR)

Ref. No. or Q'ty	Part No.	SP	Description
FL101	1-236-071-11	s	ENCAPSULATED COMPONENT, LC
IC1	8-759-708-05	s	IC NJM78L05A
IC2	8-759-700-65	s	IC NJM79L05A
IC3	8-759-708-05	s	IC NJM78L05A
IC4	8-759-700-65	s	IC NJM79L05A
IC5	8-759-708-05	s	IC NJM78L05A
IC6	8-759-700-65	s	IC NJM79L05A
IC7	8-759-708-05	s	IC NJM78L05A
IC8	8-759-700-65	s	IC NJM79L05A
IC9	8-759-013-10	s	IC MC7815CT
IC10	8-759-012-72	s	IC MC7915CT
IC51	8-759-708-05	s	IC NJM78L05A
IC52	8-759-700-65	s	IC NJM79L05A
IC53	8-759-708-05	s	IC NJM78L05A
IC54	8-759-700-65	s	IC NJM79L05A
IC55	8-759-708-05	s	IC NJM78L05A
IC56	8-759-700-65	s	IC NJM79L05A
IC57	8-759-708-05	s	IC NJM78L05A
IC58	8-759-700-65	s	IC NJM79L05A
IC100	8-759-262-12	o	IC 22V10B-IODEC8-V1.0
IC101	8-759-194-86	s	IC MC68302FC16C
IC102	8-759-262-23	o	IC 16V8B-DPDEC8-V1.0
IC103	8-759-972-58	s	IC MAX238CNG
IC104	8-759-989-91	s	IC TL7705ACPS
IC105	8-759-244-12	s	IC TC74AC175F
IC106	8-759-926-23	s	IC SN74HC163ANS
IC107	8-759-926-23	s	IC SN74HC163ANS
IC108	8-759-926-77	s	IC SN74HC541ANS
IC109	8-759-926-54	s	IC SN74HC259ANS
IC110	8-759-033-10	s	IC MC74F32M
IC111	8-759-033-02	s	IC MC74F04M
IC112	8-759-239-92	s	IC TC74HC07AF
IC114	8-759-925-80	s	IC SN74HC14ANS
IC115	8-759-927-46	s	IC SN74HC00ANS
IC116	8-759-262-26	o	IC 22V10B-MEMDECC-V1.0
IC117	8-759-262-11	o	IC 22V10B-CPUDEC8-V1.0
IC118	8-759-926-77	s	IC SN74HC541ANS
IC119	8-759-951-24	s	IC SN75124N
IC120	8-759-008-57	s	IC MC34051P
IC151	8-759-262-09	o	IC 27C210A-DEBUG-V1.00
IC155 to IC162	8-752-365-27	s	IC CXK581000AM-70LL-TL
IC163	8-759-982-65	s	IC ICL7665SCPA
IC201	8-759-033-44	s	IC MC74F245M
IC202	8-759-033-44	s	IC MC74F245M
IC203 to IC207	8-759-993-54	s	IC 74F541SJ
IC209	8-759-993-54	s	IC 74F541SJ
IC210	8-759-926-49	s	IC SN74HC245NS
IC211	8-759-926-49	s	IC SN74HC245NS
IC212 to IC219	8-759-926-77	s	IC SN74HC541ANS
IC220	8-759-925-82	s	IC SN74HC21ANS
IC221	8-759-925-76	s	IC SN74HC08ANS
IC222	8-759-925-82	s	IC SN74HC21ANS
IC223	8-759-926-77	s	IC SN74HC541ANS
IC224	8-759-926-82	s	IC SN74HC574ANS
IC225	8-759-926-77	s	IC SN74HC541ANS

(CPU-144 BOARD/PROCESSOR)

Ref. No. or Q'ty	Part No.	SP	Description
IC226	8-759-926-82	s	IC SN74HC574ANS
IC227	8-759-926-11	s	IC SN74HC138ANS
IC301	8-759-972-26	s	IC LM1881N
IC302	8-759-951-24	s	IC SN75124N
IC303	8-759-926-07	s	IC SN74HC132ANS
IC304	8-759-927-46	s	IC SN74HC00ANS
IC305	8-759-239-55	s	IC TC74HC123AF
IC306	8-759-990-84	s	IC TL084CN
IC307	8-759-503-91	s	IC TL082CP
IC308	8-759-503-91	s	IC TL082CP
IC309	8-759-200-11	s	IC TC4011UBP
IC310	8-759-200-11	s	IC TC4011UBP
IC311	8-759-925-78	s	IC SN74HC10ANS
IC312	8-759-008-13	s	IC MC74HC390F
IC313	8-759-239-55	s	IC TC74HC123AF
IC314	8-759-925-90	s	IC SN74HC74ANS
IC315	8-759-925-90	s	IC SN74HC74ANS
IC316	8-759-247-73	o	IC GAL16V8B-VPLLB-V1.0
IC317	8-759-926-23	s	IC SN74HC163ANS
IC318	8-759-926-23	s	IC SN74HC163ANS
IC319	8-759-925-74	s	IC TC74HC04ANS
IC320	8-759-951-23	s	IC SN75123N
IC321	8-759-231-58	s	IC M5F7812L
IC322	8-759-701-88	s	IC NJM7912FA
IC401	8-759-239-55	s	IC TC74HC123AF
IC402	8-759-069-38	s	IC CXD8278AQ
IC403	8-759-927-46	s	IC SN74HC00ANS
IC404	8-752-306-51	s	IC CX23065A
IC405	8-759-931-43	s	IC SN74LS624NS
IC407	8-759-927-46	s	IC SN74HC00ANS
IC408	8-752-306-51	s	IC CX23065A
IC409	8-759-925-72	s	IC SN74HC02ANS
IC410	8-759-985-26	s	IC 74AC74SJ
IC411	8-759-985-41	s	IC 74AC163SJ
IC412	8-759-985-41	s	IC 74AC163SJ
IC413	8-759-073-52	s	IC TC74AC04F-EL
IC414	8-759-985-78	s	IC 74AC541SJ
IC415	8-759-926-82	s	IC SN74HC574ANS
IC416	8-759-925-90	s	IC SN74HC74ANS
IC417	8-759-926-23	s	IC SN74HC163ANS
IC418	8-759-951-23	s	IC SN75123N
IC419	8-759-985-78	s	IC 74AC541SJ
IC420	8-759-985-78	s	IC 74AC541SJ
IC451	8-759-925-85	s	IC SN74HC32ANS
IC452	8-759-925-76	s	IC SN74HC08ANS
IC453	8-759-926-23	s	IC SN74HC163ANS
IC454	8-759-926-23	s	IC SN74HC163ANS
IC455	8-759-926-82	s	IC SN74HC574ANS
IC456	8-759-994-41	s	IC CXD8025Q
IC457	8-759-262-24	o	IC 22V10B-DSPDEC8-V1.0
IC458	8-759-926-11	s	IC SN74HC138ANS
IC459	8-759-925-90	s	IC SN74HC74ANS
IC460	8-759-925-90	s	IC SN74HC74ANS
IC461	8-759-925-90	s	IC SN74HC74ANS
IC462	8-759-985-78	s	IC 74AC541SJ
IC463	8-759-926-11	s	IC SN74HC138ANS
IC467	8-759-926-77	s	IC SN74HC541ANS
IC468	8-759-925-90	s	IC SN74HC74ANS
IC470	8-759-925-74	s	IC TC74HC04ANS

NOTE 1:Please see page 6-25 for the parts that are not listd in the parts list.

(CPU-144 BOARD/PROCESSOR)

Ref. No. or Q'ty	Part No.	SP	Description
IC501	8-759-262-16	o	IC 22V10B-PPHDEC-V1.0
IC502	8-759-926-11	s	IC SN74HC138ANS
IC503	8-759-926-11	s	IC SN74HC138ANS
IC504	8-759-169-85	s	IC CXD8834Q
IC505	8-759-926-82	s	IC SN74HC574ANS
IC506	8-759-926-82	s	IC SN74HC574ANS
IC507	8-759-926-82	s	IC SN74HC574ANS
IC508	8-759-926-82	s	IC SN74HC574ANS
IC509	8-759-926-76	s	IC SN74HC540ANS
IC510	8-759-926-77	s	IC SN74HC541ANS
IC511	8-759-926-77	s	IC SN74HC541ANS
IC512	8-759-926-77	s	IC SN74HC541ANS
IC513	8-759-926-77	s	IC SN74HC541ANS
IC514	8-759-926-11	s	IC SN74HC138ANS
IC515	8-759-926-82	s	IC SN74HC574ANS
IC516	8-759-926-82	s	IC SN74HC574ANS
IC517	8-759-926-82	s	IC SN74HC574ANS
IC518	8-759-926-82	s	IC SN74HC574ANS
IC601	8-752-352-30	s	IC CXD2705AQ
IC602	8-752-352-30	s	IC CXD2705AQ
IC603	8-752-343-18	s	IC CXD2704Q
IC604	8-752-343-18	s	IC CXD2704Q
IC605	8-752-343-18	s	IC CXD2704Q
IC606	8-752-343-18	s	IC CXD2704Q
IC607	8-759-926-77	s	IC SN74HC541ANS
IC608	8-759-926-77	s	IC SN74HC541ANS
IC609	8-759-926-17	s	IC SN74HC153ANS
IC610 to IC614	8-759-926-15	s	IC SN74HC151ANS
IC615	8-759-925-88	s	IC SN74HC51NS
IC616	8-759-925-74	s	IC TC74HC04ANS
IC617	8-759-926-77	s	IC SN74HC541ANS
IC701	8-759-156-71	s	IC SM583AP1
IC702	8-759-156-71	s	IC SM583AP1
IC703	8-759-510-35	s	IC PCM63P-K
IC704	8-759-510-35	s	IC PCM63P-K
IC705	8-759-510-35	s	IC PCM63P-K
IC706	8-759-510-35	s	IC PCM63P-K
IC707	8-759-156-71	s	IC SM583AP1
IC708	8-759-156-71	s	IC SM583AP1
IC709	8-759-510-35	s	IC PCM63P-K
IC710	8-759-510-35	s	IC PCM63P-K
IC711	8-759-510-35	s	IC PCM63P-K
IC712	8-759-510-35	s	IC PCM63P-K
IC801	8-759-900-72	s	IC NE5532P
IC802	8-759-900-72	s	IC NE5532P
IC803	8-759-158-99	s	IC SSM-2142P
IC821	8-759-900-72	s	IC NE5532P
IC822	8-759-900-72	s	IC NE5532P
IC823	8-759-158-99	s	IC SSM-2142P
IC841	8-759-900-72	s	IC NE5532P
IC842	8-759-900-72	s	IC NE5532P
IC843	8-759-158-99	s	IC SSM-2142P
IC861	8-759-900-72	s	IC NE5532P
IC862	8-759-900-72	s	IC NE5532P
IC863	8-759-158-99	s	IC SSM-2142P
IC881	8-759-900-72	s	IC NE5532P
IC882	8-759-900-72	s	IC NE5532P
IC883	8-759-158-99	s	IC SSM-2142P

NOTE 1:Please see page 6-25 for the parts that are not listd in the parts list.

(CPU-144 BOARD/PROCESSOR)

Ref. No. or Q'ty	Part No.	SP	Description
IC901	8-759-900-72	s	IC NE5532P
IC902	8-759-900-72	s	IC NE5532P
IC903	8-759-158-99	s	IC SSM-2142P
IC921	8-759-900-72	s	IC NE5532P
IC922	8-759-900-72	s	IC NE5532P
IC923	8-759-158-99	s	IC SSM-2142P
IC941	8-759-900-72	s	IC NE5532P
IC942	8-759-900-72	s	IC NE5532P
IC943	8-759-158-99	s	IC SSM-2142P
IC961	8-759-158-99	s	IC SSM-2142P
IC981	8-759-158-99	s	IC SSM-2142P
L301	1-410-517-11	s	INDUCTOR 47uH
L401	1-410-517-11	s	INDUCTOR 47uH
Q301	8-729-178-55	s	TRANSISTOR 2SC2785-E
Q302	8-729-119-78	s	TRANSISTOR 2SC2785-HFE
Q303	8-729-207-36	s	TRANSISTOR 2SJ105-GR
Q304	8-729-207-36	s	TRANSISTOR 2SJ105-GR
Q305	8-729-201-53	s	TRANSISTOR 2SA1015-GR
Q306	8-729-207-36	s	TRANSISTOR 2SJ105-GR
Q307	8-729-207-36	s	TRANSISTOR 2SJ105-GR
Q308	8-729-207-36	s	TRANSISTOR 2SJ105-GR
Q961	8-729-111-55	s	TRANSISTOR 2SD1312-K
Q962	8-729-111-52	s	TRANSISTOR 2SB984-K
Q963	8-729-111-55	s	TRANSISTOR 2SD1312-K
Q964	8-729-111-52	s	TRANSISTOR 2SB984-K
Q965	8-729-900-37	s	TRANSISTOR DTC124EF
Q981	8-729-111-55	s	TRANSISTOR 2SD1312-K
Q982	8-729-111-52	s	TRANSISTOR 2SB984-K
Q983	8-729-111-55	s	TRANSISTOR 2SD1312-K
Q984	8-729-111-52	s	TRANSISTOR 2SB984-K
Q985	8-729-900-37	s	TRANSISTOR DTC124EF
R1	1-249-411-11	s	CARBON 330 5% 1/4W
R2	1-249-409-11	s	CARBON 220 5% 1/4W
R3	1-249-409-11	s	CARBON 220 5% 1/4W
R4	1-249-411-11	s	CARBON 330 5% 1/4W
R5	1-249-409-11	s	CARBON 220 5% 1/4W
R6	1-249-409-11	s	CARBON 220 5% 1/4W
R7	1-249-411-11	s	CARBON 330 5% 1/4W
R8	1-249-409-11	s	CARBON 220 5% 1/4W
R9	1-249-409-11	s	CARBON 220 5% 1/4W
R10	1-249-411-11	s	CARBON 330 5% 1/4W
R11	1-249-409-11	s	CARBON 220 5% 1/4W
R12	1-249-409-11	s	CARBON 220 5% 1/4W
R51	1-249-411-11	s	CARBON 330 5% 1/4W
R52	1-249-409-11	s	CARBON 220 5% 1/4W
R53	1-249-409-11	s	CARBON 220 5% 1/4W
R54	1-249-411-11	s	CARBON 330 5% 1/4W
R55	1-249-409-11	s	CARBON 220 5% 1/4W
R56	1-249-409-11	s	CARBON 220 5% 1/4W
R57	1-249-411-11	s	CARBON 330 5% 1/4W
R58	1-249-409-11	s	CARBON 220 5% 1/4W
R59	1-249-409-11	s	CARBON 220 5% 1/4W
R60	1-249-411-11	s	CARBON 330 5% 1/4W
R61	1-249-409-11	s	CARBON 220 5% 1/4W
R62	1-249-409-11	s	CARBON 220 5% 1/4W
R101 to R106	1-216-065-00	s	METAL, CHIP 4.7K 5% 1/10W

(CPU-144 BOARD/PROCESSOR)

Ref. No. or Q'ty	Part No.	SP	Description
R107	1-215-398-00	s	METAL 110 1% 1/6W
R108	1-216-049-00	s	METAL, CHIP 1K 5% 1/10W
R109	1-216-049-00	s	METAL, CHIP 1K 5% 1/10W
R110	1-215-394-00	s	METAL 75 1% 1/6W
R111	1-215-389-00	s	METAL 47 1% 1/6W
R112	1-249-393-11	s	CARBON 10 5% 1/4W
R113	1-249-393-11	s	CARBON 10 5% 1/4W
R114	1-216-049-00	s	METAL, CHIP 1K 5% 1/10W
R115	1-216-049-00	s	METAL, CHIP 1K 5% 1/10W
R116	1-216-049-00	s	METAL, CHIP 1K 5% 1/10W
R117	1-216-049-00	s	METAL, CHIP 1K 5% 1/10W
R118	1-249-393-11	s	CARBON 10 5% 1/4W
R119	1-249-393-11	s	CARBON 10 5% 1/4W
R120	1-216-089-00	s	METAL, CHIP 47K 5% 1/10W
R121	1-216-089-00	s	METAL, CHIP 47K 5% 1/10W
R122	1-216-065-00	s	METAL, CHIP 4.7K 5% 1/10W
R123	1-216-089-00	s	METAL, CHIP 47K 5% 1/10W
R124	1-216-089-00	s	METAL, CHIP 47K 5% 1/10W
R125	1-216-065-00	s	METAL, CHIP 4.7K 5% 1/10W
R130	1-216-073-00	s	METAL, CHIP 10K 5% 1/10W
R131	1-216-073-00	s	METAL, CHIP 10K 5% 1/10W
R132	1-249-411-11	s	CARBON 330 5% 1/4W
R133	1-249-411-11	s	CARBON 330 5% 1/4W
R151	1-216-073-00	s	METAL, CHIP 10K 5% 1/10W
R152	1-216-073-00	s	METAL, CHIP 10K 5% 1/10W
R155	1-215-451-00	s	METAL 18K 1% 1/6W
R156	1-215-445-00	s	METAL 10K 1% 1/6W
R157	1-247-883-00	s	CARBON 150K 5% 1/4W
R158	1-249-393-11	s	CARBON 10 5% 1/4W
R159	1-249-441-11	s	CARBON 100K 5% 1/4W
R301	1-215-385-00	s	METAL 33 1% 1/6W
R302	1-215-413-00	s	METAL 470 1% 1/6W
R303	1-216-065-00	s	METAL, CHIP 4.7K 5% 1/10W
R305	1-215-394-00	s	METAL 75 1% 1/6W
R306	1-215-389-00	s	METAL 47 1% 1/6W
R307	1-215-477-00	s	METAL 220K 1% 1/6W
R308	1-215-461-00	s	METAL 47K 1% 1/6W
R309	1-215-421-00	s	METAL 1K 1% 1/6W
R310	1-215-489-00	s	METAL 680K 1% 1/6W
R311	1-249-425-11	s	CARBON 4.7K 5% 1/4W
R312	1-247-887-00	s	CARBON 220K 5% 1/4W
R313	1-249-425-11	s	CARBON 4.7K 5% 1/4W
R314	1-247-895-00	s	CARBON 470K 5% 1/4W
R315	1-215-447-00	s	METAL 12K 1% 1/6W
R316	1-215-493-00	s	METAL 1M 1% 1/6W
R317	1-215-463-00	s	METAL 56K 1% 1/6W
R318	1-215-445-00	s	METAL 10K 1% 1/6W
R319	1-215-445-00	s	METAL 10K 1% 1/6W
R320	1-215-447-00	s	METAL 12K 1% 1/6W
R321	1-215-415-00	s	METAL 560 1% 1/6W
R322	1-215-439-00	s	METAL 5.6K 1% 1/6W
R323	1-215-445-00	s	METAL 10K 1% 1/6W
R324	1-215-447-00	s	METAL 12K 1% 1/6W
R325	1-215-439-00	s	METAL 5.6K 1% 1/6W
R326	1-215-493-00	s	METAL 1M 1% 1/6W
R327	1-215-439-00	s	METAL 5.6K 1% 1/6W
R328	1-215-391-00	s	METAL 56 1% 1/6W
R329	1-215-463-00	s	METAL 56K 1% 1/6W
R330	1-215-397-00	s	METAL 100 1% 1/6W

(CPU-144 BOARD/PROCESSOR)

Ref. No. or Q'ty	Part No.	SP	Description
R331	1-215-445-00	s	METAL 10K 1% 1/6W
R332	1-215-445-00	s	METAL 10K 1% 1/6W
R333	1-215-445-00	s	METAL 10K 1% 1/6W
R334	1-215-493-00	s	METAL 1M 1% 1/6W
R335	1-215-445-00	s	METAL 10K 1% 1/6W
R336	1-215-463-00	s	METAL 56K 1% 1/6W
R401	1-216-065-00	s	METAL, CHIP 4.7K 5% 1/10W
R402	1-216-065-00	s	METAL, CHIP 4.7K 5% 1/10W
R403	1-215-421-00	s	METAL 1K 1% 1/6W
R404	1-215-437-00	s	METAL 4.7K 1% 1/6W
R405	1-215-421-00	s	METAL 1K 1% 1/6W
R406	1-215-429-00	s	METAL 2.2K 1% 1/6W
R407	1-215-429-00	s	METAL 2.2K 1% 1/6W
R408	1-215-423-00	s	METAL 1.2K 1% 1/6W
R409	1-215-438-00	s	METAL 5.1K 1% 1/6W
R410	1-215-421-00	s	METAL 1K 1% 1/6W
R411	1-216-049-00	s	METAL, CHIP 1K 5% 1/10W
R451	1-249-413-11	s	CARBON 470 5% 1/4W
R801	1-215-429-00	s	METAL 2.2K 1% 1/6W
R802	1-215-423-00	s	METAL 1.2K 1% 1/6W
R803	1-215-423-00	s	METAL 1.2K 1% 1/6W
R804	1-215-423-00	s	METAL 1.2K 1% 1/6W
R805	1-215-423-00	s	METAL 1.2K 1% 1/6W
R806	1-215-429-00	s	METAL 2.2K 1% 1/6W
R807	1-215-435-00	s	METAL 3.9K 1% 1/6W
R808	1-215-435-00	s	METAL 3.9K 1% 1/6W
R809	1-215-435-00	s	METAL 3.9K 1% 1/6W
R810	1-215-397-00	s	METAL 100 1% 1/6W
R821	1-215-429-00	s	METAL 2.2K 1% 1/6W
R822	1-215-423-00	s	METAL 1.2K 1% 1/6W
R823	1-215-423-00	s	METAL 1.2K 1% 1/6W
R824	1-215-423-00	s	METAL 1.2K 1% 1/6W
R825	1-215-423-00	s	METAL 1.2K 1% 1/6W
R826	1-215-429-00	s	METAL 2.2K 1% 1/6W
R827	1-215-435-00	s	METAL 3.9K 1% 1/6W
R828	1-215-435-00	s	METAL 3.9K 1% 1/6W
R829	1-215-435-00	s	METAL 3.9K 1% 1/6W
R830	1-215-397-00	s	METAL 100 1% 1/6W
R841	1-215-429-00	s	METAL 2.2K 1% 1/6W
R842	1-215-423-00	s	METAL 1.2K 1% 1/6W
R843	1-215-423-00	s	METAL 1.2K 1% 1/6W
R844	1-215-423-00	s	METAL 1.2K 1% 1/6W
R845	1-215-423-00	s	METAL 1.2K 1% 1/6W
R846	1-215-429-00	s	METAL 2.2K 1% 1/6W
R847	1-215-435-00	s	METAL 3.9K 1% 1/6W
R848	1-215-435-00	s	METAL 3.9K 1% 1/6W
R850	1-215-397-00	s	METAL 100 1% 1/6W
R861	1-215-429-00	s	METAL 2.2K 1% 1/6W
R862	1-215-423-00	s	METAL 1.2K 1% 1/6W
R863	1-215-423-00	s	METAL 1.2K 1% 1/6W
R864	1-215-423-00	s	METAL 1.2K 1% 1/6W
R865	1-215-423-00	s	METAL 1.2K 1% 1/6W
R866	1-215-429-00	s	METAL 2.2K 1% 1/6W
R867	1-215-435-00	s	METAL 3.9K 1% 1/6W
R868	1-215-435-00	s	METAL 3.9K 1% 1/6W
R870	1-215-397-00	s	METAL 100 1% 1/6W
R881	1-215-429-00	s	METAL 2.2K 1% 1/6W
R882	1-215-423-00	s	METAL 1.2K 1% 1/6W
R883	1-215-423-00	s	METAL 1.2K 1% 1/6W

NOTE 1:Please see page 6-25 for the parts that are not listd in the parts list.

(CPU-144 BOARD/PROCESSOR)

Ref. No. or Q'ty	Part No.	SP	Description
R884	1-215-423-00	s	METAL 1.2K 1% 1/6W
R885	1-215-423-00	s	METAL 1.2K 1% 1/6W
R886	1-215-429-00	s	METAL 2.2K 1% 1/6W
R887	1-215-435-00	s	METAL 3.9K 1% 1/6W
R888	1-215-435-00	s	METAL 3.9K 1% 1/6W
R890	1-215-397-00	s	METAL 100 1% 1/6W
R901	1-215-429-00	s	METAL 2.2K 1% 1/6W
R902	1-215-423-00	s	METAL 1.2K 1% 1/6W
R903	1-215-423-00	s	METAL 1.2K 1% 1/6W
R904	1-215-423-00	s	METAL 1.2K 1% 1/6W
R905	1-215-423-00	s	METAL 1.2K 1% 1/6W
R906	1-215-429-00	s	METAL 2.2K 1% 1/6W
R907	1-215-435-00	s	METAL 3.9K 1% 1/6W
R908	1-215-435-00	s	METAL 3.9K 1% 1/6W
R910	1-215-397-00	s	METAL 100 1% 1/6W
R921	1-215-429-00	s	METAL 2.2K 1% 1/6W
R922	1-215-423-00	s	METAL 1.2K 1% 1/6W
R923	1-215-423-00	s	METAL 1.2K 1% 1/6W
R924	1-215-423-00	s	METAL 1.2K 1% 1/6W
R925	1-215-423-00	s	METAL 1.2K 1% 1/6W
R926	1-215-429-00	s	METAL 2.2K 1% 1/6W
R927	1-215-435-00	s	METAL 3.9K 1% 1/6W
R928	1-215-435-00	s	METAL 3.9K 1% 1/6W
R930	1-215-397-00	s	METAL 100 1% 1/6W
R941	1-215-429-00	s	METAL 2.2K 1% 1/6W
R942	1-215-423-00	s	METAL 1.2K 1% 1/6W
R943	1-215-423-00	s	METAL 1.2K 1% 1/6W
R944	1-215-423-00	s	METAL 1.2K 1% 1/6W
R945	1-215-423-00	s	METAL 1.2K 1% 1/6W
R946	1-215-429-00	s	METAL 2.2K 1% 1/6W
R947	1-215-435-00	s	METAL 3.9K 1% 1/6W
R948	1-215-435-00	s	METAL 3.9K 1% 1/6W
R950	1-215-397-00	s	METAL 100 1% 1/6W
R961	1-215-397-00	s	METAL 100 1% 1/6W
R964	1-215-441-00	s	METAL 6.8K 1% 1/6W
R965	1-215-441-00	s	METAL 6.8K 1% 1/6W
R966	1-249-389-11	s	CARBON 4.7 5% 1/4W
R967	1-249-389-11	s	CARBON 4.7 5% 1/4W
R968	1-215-441-00	s	METAL 6.8K 1% 1/6W
R969	1-215-441-00	s	METAL 6.8K 1% 1/6W
R970	1-249-389-11	s	CARBON 4.7 5% 1/4W
R971	1-249-389-11	s	CARBON 4.7 5% 1/4W
R972	1-215-381-00	s	METAL 22 1% 1/6W
R973	1-215-381-00	s	METAL 22 1% 1/6W
R974	1-215-397-00	s	METAL 100 1% 1/6W
R975	1-215-397-00	s	METAL 100 1% 1/6W
R978	1-214-808-11	s	METAL 4.7 1% 1/2W
R979	1-214-808-11	s	METAL 4.7 1% 1/2W
R981	1-215-397-00	s	METAL 100 1% 1/6W
R984	1-215-441-00	s	METAL 6.8K 1% 1/6W
R985	1-215-441-00	s	METAL 6.8K 1% 1/6W
R986	1-249-389-11	s	CARBON 4.7 5% 1/4W
R987	1-249-389-11	s	CARBON 4.7 5% 1/4W
R988	1-215-441-00	s	METAL 6.8K 1% 1/6W
R989	1-215-441-00	s	METAL 6.8K 1% 1/6W
R990	1-249-389-11	s	CARBON 4.7 5% 1/4W
R991	1-249-389-11	s	CARBON 4.7 5% 1/4W
R992	1-215-381-00	s	METAL 22 1% 1/6W
R993	1-215-381-00	s	METAL 22 1% 1/6W

NOTE 1:Please see page 6-25 for the parts that are not listd in the parts list.

(CPU-144 BOARD/PROCESSOR)

Ref. No. or Q'ty	Part No.	SP	Description
R994	1-215-397-00	s	METAL 100 1% 1/6W
R995	1-215-397-00	s	METAL 100 1% 1/6W
R998	1-214-808-11	s	METAL 4.7 1% 1/2W
R999	1-214-808-11	s	METAL 4.7 1% 1/2W
RB101	1-235-194-00	s	RESISTOR BLOCK 4.7KX8
RB102	1-235-337-11	s	RESISTOR BLOCK 22KX8
RB103	1-235-337-11	s	RESISTOR BLOCK 22KX8
RB104	1-235-332-11	s	RESISTOR BLOCK 470X8
RB105	1-231-541-00	s	RESISTOR BLOCK 22Kx4
RB201 to RB205	1-235-195-00	s	RESISTOR BLOCK 10KX8
RB206	1-235-332-11	s	RESISTOR BLOCK 470X8
RB451	1-231-541-00	s	RESISTOR BLOCK 22Kx4
RB501	1-235-337-11	s	RESISTOR BLOCK 22KX8
RB502	1-235-337-11	s	RESISTOR BLOCK 22KX8
RB503	1-235-337-11	s	RESISTOR BLOCK 22KX8
RB504	1-235-337-11	s	RESISTOR BLOCK 22KX8
RB505	1-235-332-11	s	RESISTOR BLOCK 470X8
RB601	1-231-533-00	s	RESISTOR BLOCK 10Kx4
RB602	1-235-195-00	s	RESISTOR BLOCK 10KX8
RB603	1-235-195-00	s	RESISTOR BLOCK 10KX8
RV301	1-230-753-11	s	RES, ADJ, CERMET 100K
RV302	1-230-753-11	s	RES, ADJ, CERMET 100K
RV303	1-230-753-11	s	RES, ADJ, CERMET 100K
RV801	1-230-749-21	s	RES, ADJ, CERMET 5K
RV802	1-230-749-21	s	RES, ADJ, CERMET 5K
RV821	1-230-749-21	s	RES, ADJ, CERMET 5K
RV822	1-230-749-21	s	RES, ADJ, CERMET 5K
RV841	1-230-749-21	s	RES, ADJ, CERMET 5K
RV861	1-230-749-21	s	RES, ADJ, CERMET 5K
RV881	1-230-749-21	s	RES, ADJ, CERMET 5K
RV901	1-230-749-21	s	RES, ADJ, CERMET 5K
RV921	1-230-749-21	s	RES, ADJ, CERMET 5K
RV941	1-230-749-21	s	RES, ADJ, CERMET 5K
RY962	1-515-716-11	s	RELAY (TQ2-5V)
RY981	1-515-716-11	s	RELAY (TQ2-5V)
S101	1-554-937-11	s	SWITCH, PUSH
S102	1-570-266-11	s	SWITCH, PUSH (1 KEY)
S103	1-570-623-11	s	SWITCH, DIP 8-CKT
S501	1-570-623-11	s	SWITCH, DIP 8-CKT
S502	1-570-623-11	s	SWITCH, DIP 8-CKT
S503	1-570-623-11	s	SWITCH, DIP 8-CKT
S504	1-570-623-11	s	SWITCH, DIP 8-CKT
X1	1-577-258-11	s	CRYSTAL, 32MHz
X2	1-577-170-11	s	CRYSTAL, 50MHz
X301	1-567-853-11	s	CRYSTAL, 4.8MHz
X302	1-567-852-11	s	CRYSTAL, 4.41MHz
X303	1-567-851-11	s	CRYSTAL 4.4MHz
X401	8-749-923-59	s	IC VCO-8003

DP-131 BOARD/PROCESSOR

Ref. No. or Q'ty	Part No.	SP	Description

(For details for DP-131 board, see page 6-53.)

IPM-48 BOARD/PROCESSOR

Ref. No. or Q'ty	Part No.	SP	Description
1pc	A-8275-636-A	o	MOUNTED CIRCUIT BOARD, IPM-48
2pcs	2-146-577-01	o	LEVER (1), PC BOARD
2pcs	3-174-923-01	o	LEVER (2), PC BOARD
4pcs	7-626-320-11	s	PIN, SPRING 3X8
4pcs	7-685-546-14	s	SCREW +BTP 3X8 TYPE2 N-S
7pcs	7-682-903-01	s	SCREW +PWH 3X5
4pcs	7-682-547-04	s	SCREW +B 3X6
C122	1-126-163-11	s	ELECT 4.7uF 20% 50V
C123	1-126-163-11	s	ELECT 4.7uF 20% 50V
C124	1-126-163-11	s	ELECT 4.7uF 20% 50V
C125	1-126-163-11	s	ELECT 4.7uF 20% 50V
C127	1-126-157-11	s	ELECT 10uF 20% 16V
C129	1-126-925-11	s	ELECT 470uF 20% 10V
C130	1-126-925-11	s	ELECT 470uF 20% 10V
C158	1-125-447-11	s	DOUBLE LAYERS 1FARAD 5.5V
C159	1-125-447-11	s	DOUBLE LAYERS 1FARAD 5.5V
CN1	1-506-748-11	s	CONNECTOR, DIN 96P, MALE
CN2	1-506-748-11	s	CONNECTOR, DIN 96P, MALE
CN3	1-563-770-11	s	CONNECTOR, D-SUB 9P, FEMALE
CN4	1-563-770-11	s	CONNECTOR, D-SUB 9P, FEMALE
CNI110	1-526-656-00	s	SOCKET, IC (DP) 20P
CNI111	1-526-656-00	s	SOCKET, IC (DP) 20P
CNI112	1-526-656-00	s	SOCKET, IC (DP) 20P
CNI113	1-526-816-21	s	SOCKET, IC (DP) 24P
CNI152	1-526-662-21	o	SOCKET, IC (DP) 40P
CNI153	1-526-662-21	o	SOCKET, IC (DP) 40P
CNI308	1-526-816-21	s	SOCKET, IC (DP) 24P
CNI315	1-526-816-21	s	SOCKET, IC (DP) 24P
CNI407	1-526-816-21	s	SOCKET, IC (DP) 24P
COP501	1-562-579-21	s	PLUG, SHORTING
COP502	1-562-579-21	s	PLUG, SHORTING
COR101	1-564-947-21	o	PIN, SHORTING, 2P
COR102	1-564-947-21	o	PIN, SHORTING, 2P
COR151	1-564-947-21	o	PIN, SHORTING, 2P
COR152	1-564-947-21	o	PIN, SHORTING, 2P
COR153	1-564-947-21	o	PIN, SHORTING, 2P
COR154	1-564-947-21	o	PIN, SHORTING, 2P
COR501	1-564-947-21	o	PIN, SHORTING, 2P
COR502	1-564-947-21	o	PIN, SHORTING, 2P
COR633 to COR648	1-564-947-21	o	PIN, SHORTING, 2P
D101	8-719-812-31	s	LED TLR123, RED
D102	8-719-812-31	s	LED TLR123, RED
D103 to D110	8-719-812-43	s	LED TLG124A, GRN
D151	8-719-987-87	s	DIODE ERA85-009
D701 to D709	8-719-812-42	s	DIODE TLY124
D710 to D735	8-719-812-43	s	LED TLG124A, GRN
D736	8-719-812-42	s	DIODE TLY124
FL101	1-236-071-11	s	ENCAPSULATED COMPONENT, LC
IC101	8-759-194-86	s	IC MC68302FC16C
IC102	8-759-972-58	s	IC MAX238CNG

NOTE 1:Please see page 6-25 for the parts that are not listd in the parts list.

(IPM-48 BOARD/PROCESSOR)

Ref. No. or Q'ty	Part No.	SP	Description
IC103	8-759-989-91	s	IC TL7705ACPS
IC104	8-759-239-92	s	IC TC74HC07AF
IC105	8-759-925-80	s	IC SN74HC14ANS
IC106	8-759-927-46	s	IC SN74HC00ANS
IC107	8-759-244-12	s	IC TC74AC175F
IC108	8-759-926-23	s	IC SN74HC163ANS
IC109	8-759-926-23	s	IC SN74HC163ANS
IC110	8-759-262-22	o	IC 16V8B-MEMDEC8-V1.0
IC111	8-759-262-23	o	IC 16V8B-DPDEC8-V1.0
IC112	8-759-262-11	o	IC 22V10B-CPUDEC8-V1.0
IC113	8-759-262-12	o	IC 22V10B-IODEC8-V1.0
IC114	8-759-926-77	s	IC SN74HC541ANS
IC115	8-759-926-54	s	IC SN74HC259ANS
IC116	8-759-033-10	s	IC MC74F32M
IC117	8-759-033-02	s	IC MC74F04M
IC118	8-759-985-78	s	IC 74AC541SJ
IC119	8-759-985-78	s	IC 74AC541SJ
IC120	8-759-985-78	s	IC 74AC541SJ
IC121	8-759-985-26	s	IC 74AC74SJ
IC151	8-759-982-65	s	IC ICL7665SCPA
IC152	8-759-262-20	o	IC 27C210A-IPMAPL-V1.00
IC153	8-759-262-09	o	IC 27C210A-DEBUG-V1.00
IC154	8-752-365-27	s	IC CXK581000AM-70LL-TL
IC155	8-752-365-27	s	IC CXK581000AM-70LL-TL
IC156	8-752-365-27	s	IC CXK581000AM-70LL-TL
IC157	8-752-365-27	s	IC CXK581000AM-70LL-TL
IC201	8-759-985-78	s	IC 74AC541SJ
IC202	8-759-926-49	s	IC SN74HC245NS
IC203	8-759-926-49	s	IC SN74HC245NS
IC204 to IC208	8-759-926-77	s	IC SN74HC541ANS
IC209	8-759-510-88	s	IC MB8431-90LPFQ
IC210	8-759-973-43	s	IC MB8421-90LPFQ
IC211	8-759-985-78	s	IC 74AC541SJ
IC212	8-759-985-78	s	IC 74AC541SJ
IC213	8-759-985-78	s	IC 74AC541SJ
IC214	8-759-033-44	s	IC MC74F245M
IC215	8-759-033-44	s	IC MC74F245M
IC216	8-759-993-54	s	IC 74F541SJ
IC217	8-759-993-54	s	IC 74F541SJ
IC218	8-759-993-54	s	IC 74F541SJ
IC219	8-759-993-54	s	IC 74F541SJ
IC220	8-759-993-54	s	IC 74F541SJ
IC221	8-759-993-54	s	IC 74F541SJ
IC222	8-759-925-74	s	IC TC74HC04ANS
IC301	8-759-925-85	s	IC SN74HC32ANS
IC302	8-759-925-76	s	IC SN74HC08ANS
IC303	8-759-926-23	s	IC SN74HC163ANS
IC304	8-759-926-23	s	IC SN74HC163ANS
IC305	8-759-925-74	s	IC TC74HC04ANS
IC306	8-759-926-82	s	IC SN74HC574ANS
IC307	8-759-994-41	s	IC CXD8025Q
IC308	8-759-262-24	o	IC 22V10B-DSPDEC8-V1.0
IC309	8-759-985-78	s	IC 74AC541SJ
IC310	8-759-985-78	s	IC 74AC541SJ
IC311	8-759-926-11	s	IC SN74HC138ANS
IC312	8-759-926-11	s	IC SN74HC138ANS
IC313	8-759-926-11	s	IC SN74HC138ANS
IC314	8-759-926-11	s	IC SN74HC138ANS

NOTE 1:Please see page 6-25 for the parts that are not listd in the parts list.

(IPM-48 BOARD/PROCESSOR)

Ref. No. or Q'ty	Part No.	SP	Description
IC315	8-759-262-13	o	IC 22V10B-DIDEC-V1.0
IC316	8-759-926-27	s	IC SN74HC173NS
IC317	8-759-926-11	s	IC SN74HC138ANS
IC318	8-759-985-26	s	IC 74AC74SJ
IC401	8-759-925-80	s	IC SN74HC14ANS
IC402	8-759-925-80	s	IC SN74HC14ANS
IC403	8-759-925-80	s	IC SN74HC14ANS
IC404	8-759-925-80	s	IC SN74HC14ANS
IC405	8-759-926-77	s	IC SN74HC541ANS
IC406	8-759-926-77	s	IC SN74HC541ANS
IC407	8-759-262-25	o	IC 22V10B-DIAGDEC-V1.0
IC408	8-759-977-89	s	IC CXD8014G
IC409	8-759-925-80	s	IC SN74HC14ANS
IC410	8-759-925-80	s	IC SN74HC14ANS
IC502	8-759-169-85	s	IC CXD8834Q
IC503	8-759-169-85	s	IC CXD8834Q
IC504	8-759-169-85	s	IC CXD8834Q
IC505	8-759-069-38	s	IC CXD8278AQ
IC601	8-752-352-30	s	IC CXD2705AQ
IC602	8-759-070-11	s	IC TC514256BZ-60
IC603	8-759-070-11	s	IC TC514256BZ-60
IC604	8-752-352-30	s	IC CXD2705AQ
IC605	8-759-070-11	s	IC TC514256BZ-60
IC606	8-759-070-11	s	IC TC514256BZ-60
IC607	8-752-352-30	s	IC CXD2705AQ
IC608	8-759-070-11	s	IC TC514256BZ-60
IC609	8-759-070-11	s	IC TC514256BZ-60
IC610	8-752-352-30	s	IC CXD2705AQ
IC611	8-759-070-11	s	IC TC514256BZ-60
IC612	8-759-070-11	s	IC TC514256BZ-60
IC613	8-752-352-30	s	IC CXD2705AQ
IC614	8-759-070-11	s	IC TC514256BZ-60
IC615	8-759-070-11	s	IC TC514256BZ-60
IC616	8-752-352-30	s	IC CXD2705AQ
IC617	8-759-070-11	s	IC TC514256BZ-60
IC618	8-759-070-11	s	IC TC514256BZ-60
IC619	8-752-352-30	s	IC CXD2705AQ
IC620	8-759-070-11	s	IC TC514256BZ-60
IC621	8-759-070-11	s	IC TC514256BZ-60
IC622	8-752-352-30	s	IC CXD2705AQ
IC623	8-759-070-11	s	IC TC514256BZ-60
IC624	8-759-070-11	s	IC TC514256BZ-60
IC625 to IC642	8-752-352-30	s	IC CXD2705AQ
IC701 to IC707	8-759-926-76	s	IC SN74HC540ANS
IC801	8-759-926-77	s	IC SN74HC541ANS
IC802	8-759-926-77	s	IC SN74HC541ANS
IC803	8-759-926-77	s	IC SN74HC541ANS
IC804	8-759-926-77	s	IC SN74HC541ANS
IC901 to IC905	8-759-926-77	s	IC SN74HC541ANS
R101 to R107	1-249-425-11	s	CARBON 4.7K 5% 1/4W
R108	1-249-411-11	s	CARBON 330 5% 1/4W
R109	1-249-411-11	s	CARBON 330 5% 1/4W
R110	1-249-429-11	s	CARBON 10K 5% 1/4W

(IPM-48 BOARD/PROCESSOR)

Ref. No. or Q'ty	Part No.	SP	Description
R111	1-249-429-11	s	CARBON 10K 5% 1/4W
R151	1-215-451-00	s	METAL 18K 1% 1/6W
R152	1-215-445-00	s	METAL 10K 1% 1/6W
R153	1-247-883-00	s	CARBON 150K 5% 1/4W
R154	1-249-393-11	s	CARBON 10 5% 1/4W
R155	1-249-441-11	s	CARBON 100K 5% 1/4W
R156	1-249-429-11	s	CARBON 10K 5% 1/4W
R157	1-249-429-11	s	CARBON 10K 5% 1/4W
R201	1-249-425-11	s	CARBON 4.7K 5% 1/4W
R202	1-249-425-11	s	CARBON 4.7K 5% 1/4W
R203	1-249-425-11	s	CARBON 4.7K 5% 1/4W
R204	1-249-425-11	s	CARBON 4.7K 5% 1/4W
R501	1-249-429-11	s	CARBON 10K 5% 1/4W
R701	1-249-429-11	s	CARBON 10K 5% 1/4W
R702	1-249-429-11	s	CARBON 10K 5% 1/4W
R703	1-249-411-11	s	CARBON 330 5% 1/4W
RB101	1-235-194-00	s	RESISTOR BLOCK 4.7KX8
RB102	1-235-337-11	s	RESISTOR BLOCK 22KX8
RB103	1-235-337-11	s	RESISTOR BLOCK 22KX8
RB104	1-236-232-11	s	RESISTOR BLOCK 330X8
RB105	1-235-337-11	s	RESISTOR BLOCK 22KX8
RB201 to RB207	1-235-194-00	s	RESISTOR BLOCK 4.7KX8
RB301	1-235-195-00	s	RESISTOR BLOCK 10KX8
RB401 to RB406	1-235-195-00	s	RESISTOR BLOCK 10KX8
RB701 to RB705	1-236-232-11	s	RESISTOR BLOCK 330X8
RB901 to RB905	1-235-337-11	s	RESISTOR BLOCK 22KX8
S101	1-554-937-11	s	SWITCH, PUSH
S102	1-570-266-11	s	SWITCH, PUSH (1 KEY)
S103	1-570-623-11	s	SWITCH, DIP 8-CKT
S701 to S705	1-570-623-11	s	SWITCH, DIP 8-CKT
S706	1-570-602-11	s	SWITCH, DIP 2-CKT
X101	1-577-258-11	s	CRYSTAL, 32MHz
X102	1-577-170-11	s	CRYSTAL, 50MHz

MB-480 BOARD/PROCESSOR

Ref. No. or Q'ty	Part No.	SP	Description
1pc	A-8274-619-A	o	MOUNTED CIRCUIT BOARD, MB-480
20pcs	7-685-546-14	s	SCREW +BTP 3X8 TYPE2 N-S
C1	1-102-959-00	s	CERAMIC 22PF 5% 50V
C2	1-102-959-00	s	CERAMIC 22PF 5% 50V
C3	1-102-959-00	s	CERAMIC 22PF 5% 50V
C4	1-102-959-00	s	CERAMIC 22PF 5% 50V
C5	1-102-959-00	s	CERAMIC 22PF 5% 50V
CN6	1-563-337-11	s	CONNECTOR, DIN 96P, FEMALE
CN7	1-563-337-11	s	CONNECTOR, DIN 96P, FEMALE
CN8	1-563-337-11	s	CONNECTOR, DIN 96P, FEMALE
CN9	1-563-337-11	s	CONNECTOR, DIN 96P, FEMALE
CN1A	1-563-337-11	s	CONNECTOR, DIN 96P, FEMALE
CN1B	1-563-337-11	s	CONNECTOR, DIN 96P, FEMALE
CN10	1-563-337-11	s	CONNECTOR, DIN 96P, FEMALE
CN11	1-563-337-11	s	CONNECTOR, DIN 96P, FEMALE
CN12	1-506-474-11	s	CONNECTOR 9P, MALE
CN13	1-506-599-11	o	PIN, CONNECTOR (B10P-VH) 10P
CN14	1-564-241-00	o	CONNECTOR, 4P, MALE
CN2A	1-563-337-11	s	CONNECTOR, DIN 96P, FEMALE
CN2B	1-563-337-11	s	CONNECTOR, DIN 96P, FEMALE
CN3A	1-563-337-11	s	CONNECTOR, DIN 96P, FEMALE
CN3B	1-563-337-11	s	CONNECTOR, DIN 96P, FEMALE
CN4A	1-563-337-11	s	CONNECTOR, DIN 96P, FEMALE
CN4B	1-563-337-11	s	CONNECTOR, DIN 96P, FEMALE
CN5A	1-563-337-11	s	CONNECTOR, DIN 96P, FEMALE
CN5B	1-563-337-11	s	CONNECTOR, DIN 96P, FEMALE
RB1	1-235-334-11	s	RESISTOR BLOCK 3.3KX8
RB2	1-235-333-11	s	RESISTOR BLOCK 1.5KX8

NOTE 1:Please see page 6-25 for the parts that are not listd in the parts list.

MIX-16 BOARD/PROCESSOR

Ref. No. or Q'ty	Part No.	SP	Description
1pc	A-8275-633-A	o	MOUNTED CIRCUIT BOARD, MIX-16
2pcs	2-146-577-01	o	LEVER (1), PC BOARD
2pcs	3-174-923-01	o	LEVER (2), PC BOARD
4pcs	7-626-320-11	s	PIN, SPRING 3X8
4pcs	7-685-546-14	s	SCREW +BTP 3X8 TYPE2 N-S
7pcs	7-682-903-01	s	SCREW +PWH 3X5
4pcs	7-682-547-04	s	SCREW +B 3X6
C1	1-126-163-11	s	ELECT 4.7uF 20% 50V
C2	1-126-163-11	s	ELECT 4.7uF 20% 50V
C3	1-126-163-11	s	ELECT 4.7uF 20% 50V
C4	1-126-163-11	s	ELECT 4.7uF 20% 50V
C5	1-163-038-00	s	CAP, CHIP 0.1uF 25V
C6	1-126-157-11	s	ELECT 10uF 20% 16V
C51	1-125-447-11	s	DOUBLE LAYERS 1FARAD 5.5V
C52	1-125-447-11	s	DOUBLE LAYERS 1FARAD 5.5V
C100 to C112	1-163-038-00	s	CAP, CHIP 0.1uF 25V
C114 to C121	1-163-038-00	s	CAP, CHIP 0.1uF 25V
C130	1-163-038-00	s	CAP, CHIP 0.1uF 25V
C131	1-126-925-11	s	ELECT 470uF 20% 10V
C132	1-126-925-11	s	ELECT 470uF 20% 10V
C133	1-163-038-00	s	CAP, CHIP 0.1uF 25V
C151 to C157	1-163-038-00	s	CAP, CHIP 0.1uF 25V
C201 to C223	1-163-038-00	s	CAP, CHIP 0.1uF 25V
C301 to C324	1-163-038-00	s	CAP, CHIP 0.1uF 25V
C401 to C436	1-163-038-00	s	CAP, CHIP 0.1uF 25V
C438	1-163-038-00	s	CAP, CHIP 0.1uF 25V
C439	1-163-038-00	s	CAP, CHIP 0.1uF 25V
C440	1-163-038-00	s	CAP, CHIP 0.1uF 25V
C501	1-163-038-00	s	CAP, CHIP 0.1uF 25V
C502	1-163-038-00	s	CAP, CHIP 0.1uF 25V
C503	1-163-038-00	s	CAP, CHIP 0.1uF 25V
C504	1-163-038-00	s	CAP, CHIP 0.1uF 25V
C506 to C516	1-163-038-00	s	CAP, CHIP 0.1uF 25V
C551 to C558	1-163-038-00	s	CAP, CHIP 0.1uF 25V
C601 to C608	1-163-038-00	s	CAP, CHIP 0.1uF 25V
C701 to C714	1-163-038-00	s	CAP, CHIP 0.1uF 25V
C751 to C763	1-163-038-00	s	CAP, CHIP 0.1uF 25V
C801 to C805	1-163-038-00	s	CAP, CHIP 0.1uF 25V
C851	1-163-038-00	s	CAP, CHIP 0.1uF 25V
C852	1-163-038-00	s	CAP, CHIP 0.1uF 25V
C853	1-163-038-00	s	CAP, CHIP 0.1uF 25V
C854	1-163-038-00	s	CAP, CHIP 0.1uF 25V

(MIX-16 BOARD/PROCESSOR)

Ref. No. or Q'ty	Part No.	SP	Description
C901 to C911	1-163-038-00	s	CAP, CHIP 0.1uF 25V
CN1	1-506-748-11	s	CONNECTOR, DIN 96P, MALE
CN2	1-506-748-11	s	CONNECTOR, DIN 96P, MALE
CN3	1-563-770-11	s	CONNECTOR, D-SUB 9P, FEMALE
CN4	1-563-770-11	s	CONNECTOR, D-SUB 9P, FEMALE
CNI100	1-526-816-21	s	SOCKET, IC (DP) 24P
CNI102	1-526-656-00	s	SOCKET, IC (DP) 20P
CNI116	1-526-656-00	s	SOCKET, IC (DP) 20P
CNI117	1-526-816-21	s	SOCKET, IC (DP) 24P
CNI152	1-526-662-21	o	SOCKET, IC (DP) 40P
CNI153	1-526-662-21	o	SOCKET, IC (DP) 40P
CNI309	1-526-816-21	s	SOCKET, IC (DP) 24P
CNI401	1-526-816-21	s	SOCKET, IC (DP) 24P
COR101	1-564-947-21	o	PIN, SHORTING, 2P
COR102	1-564-947-21	o	PIN, SHORTING, 2P
COR151	1-564-947-21	o	PIN, SHORTING, 2P
COR152	1-564-947-21	o	PIN, SHORTING, 2P
COR153	1-564-947-21	o	PIN, SHORTING, 2P
COR154	1-564-947-21	o	PIN, SHORTING, 2P
D101	8-719-812-31	s	LED TLR123, RED
D102	8-719-812-31	s	LED TLR123, RED
D103 to D110	8-719-812-43	s	LED TLG124A, GRN
D151	8-719-987-87	s	DIODE ERA85-009
D401 to D408	8-719-812-43	s	LED TLG124A, GRN
D901 to D925	8-719-812-43	s	LED TLG124A, GRN
D926	8-719-812-42	s	DIODE TLY124
FL101	1-236-071-11	s	ENCAPSULATED COMPONENT, LC
IC100	8-759-262-12	o	IC 22V10B-IODEC8-V1.0
IC101	8-759-194-86	s	IC MC68302FC16C
IC102	8-759-262-23	o	IC 16V8B-DPDEC8-V1.0
IC103	8-759-972-58	s	IC MAX238CNG
IC104	8-759-989-91	s	IC TL7705ACPS
IC105	8-759-985-45	s	IC 74AC175SJ
IC106	8-759-926-23	s	IC SN74HC163ANS
IC107	8-759-926-23	s	IC SN74HC163ANS
IC108	8-759-926-77	s	IC SN74HC541ANS
IC109	8-759-926-54	s	IC SN74HC259ANS
IC110	8-759-033-10	s	IC MC74F32M
IC111	8-759-033-02	s	IC MC74F04M
IC112	8-759-239-92	s	IC TC74HC07AF
IC114	8-759-925-80	s	IC SN74HC14ANS
IC115	8-759-929-73	s	IC SN74LS00NS
IC116	8-759-262-22	o	IC 16V8B-MEMDEC8-V1.0
IC117	8-759-262-11	o	IC 22V10B-CPUDEC8-V1.0
IC118	8-759-985-78	s	IC 74AC541SJ
IC119	8-759-985-78	s	IC 74AC541SJ
IC120	8-759-985-78	s	IC 74AC541SJ
IC121	8-759-985-78	s	IC 74AC541SJ
IC151	8-759-982-65	s	IC ICL7665SCPA
IC152	8-759-262-09	o	IC 27C210A-DEBUG-V1.00

NOTE 1:Please see page 6-25 for the parts that are not listd in the parts list.

(MIX-16 BOARD/PROCESSOR)

Ref. No. or Q'ty	Part No.	SP	Description
IC154	8-752-365-27	s	IC CXK581000AM-70LL-TL
IC155	8-752-365-27	s	IC CXK581000AM-70LL-TL
IC156	8-752-365-27	s	IC CXK581000AM-70LL-TL
IC157	8-752-365-27	s	IC CXK581000AM-70LL-TL
IC201	8-759-985-78	s	IC 74AC541SJ
IC202	8-759-926-49	s	IC SN74HC245NS
IC203	8-759-926-49	s	IC SN74HC245NS
IC204 to IC208	8-759-926-77	s	IC SN74HC541ANS
IC209	8-759-973-43	s	IC MB8421-90LPFQ
IC210	8-759-973-43	s	IC MB8421-90LPFQ
IC211 to IC215	8-759-985-78	s	IC 74AC541SJ
IC216	8-759-033-44	s	IC MC74F245M
IC217	8-759-033-44	s	IC MC74F245M
IC218 to IC223	8-759-993-54	s	IC 74F541SJ
IC301	8-759-925-85	s	IC SN74HC32ANS
IC302	8-759-925-76	s	IC SN74HC08ANS
IC303	8-759-925-82	s	IC SN74HC21ANS
IC304	8-759-926-23	s	IC SN74HC163ANS
IC305	8-759-926-23	s	IC SN74HC163ANS
IC306	8-759-925-74	s	IC TC74HC04ANS
IC307	8-759-926-82	s	IC SN74HC574ANS
IC308	8-759-994-41	s	IC CXD8025Q
IC309	8-759-262-24	o	IC 22V10B-DSPDEC8-V1.0
IC310	8-759-985-78	s	IC 74AC541SJ
IC311	8-759-985-78	s	IC 74AC541SJ
IC312	8-759-985-78	s	IC 74AC541SJ
IC313 to IC318	8-759-926-11	s	IC SN74HC138ANS
IC319 to IC323	8-759-925-90	s	IC SN74HC74ANS
IC324	8-759-926-77	s	IC SN74HC541ANS
IC401	8-759-262-14	o	IC 22V10B-GPDEC8-V1.0
IC402	8-759-926-11	s	IC SN74HC138ANS
IC403	8-759-926-11	s	IC SN74HC138ANS
IC404	8-759-926-82	s	IC SN74HC574ANS
IC405	8-759-926-82	s	IC SN74HC574ANS
IC406	8-759-926-82	s	IC SN74HC574ANS
IC407	8-759-926-18	s	IC SN74HC157ANS
IC408	8-759-926-18	s	IC SN74HC157ANS
IC409	8-759-926-82	s	IC SN74HC574ANS
IC410	8-759-926-82	s	IC SN74HC574ANS
IC411	8-759-926-18	s	IC SN74HC157ANS
IC412	8-759-926-18	s	IC SN74HC157ANS
IC413	8-759-926-82	s	IC SN74HC574ANS
IC414	8-759-926-82	s	IC SN74HC574ANS
IC415	8-759-926-18	s	IC SN74HC157ANS
IC416	8-759-926-18	s	IC SN74HC157ANS
IC417	8-759-926-82	s	IC SN74HC574ANS
IC418	8-759-926-82	s	IC SN74HC574ANS
IC419	8-759-926-18	s	IC SN74HC157ANS
IC420	8-759-926-18	s	IC SN74HC157ANS
IC421	8-759-926-82	s	IC SN74HC574ANS
IC422	8-759-926-82	s	IC SN74HC574ANS
IC423	8-759-926-18	s	IC SN74HC157ANS
IC424	8-759-926-18	s	IC SN74HC157ANS

(MIX-16 BOARD/PROCESSOR)

Ref. No. or Q'ty	Part No.	SP	Description
IC425	8-759-926-82	s	IC SN74HC574ANS
IC426	8-759-926-82	s	IC SN74HC574ANS
IC427	8-759-926-18	s	IC SN74HC157ANS
IC428	8-759-926-18	s	IC SN74HC157ANS
IC429	8-759-926-82	s	IC SN74HC574ANS
IC430	8-759-926-82	s	IC SN74HC574ANS
IC431	8-759-926-18	s	IC SN74HC157ANS
IC432	8-759-926-18	s	IC SN74HC157ANS
IC433	8-759-926-82	s	IC SN74HC574ANS
IC434	8-759-926-82	s	IC SN74HC574ANS
IC435	8-759-926-18	s	IC SN74HC157ANS
IC436	8-759-926-18	s	IC SN74HC157ANS
IC438	8-759-925-90	s	IC SN74HC74ANS
IC439	8-759-926-11	s	IC SN74HC138ANS
IC440	8-759-926-82	s	IC SN74HC574ANS
IC501	8-759-926-77	s	IC SN74HC541ANS
IC502	8-759-926-77	s	IC SN74HC541ANS
IC503	8-759-926-77	s	IC SN74HC541ANS
IC504	8-759-926-77	s	IC SN74HC541ANS
IC506	8-759-977-89	s	IC CXD8014G
IC507 to IC514	8-752-352-30	s	IC CXD2705AQ
IC515	8-759-926-77	s	IC SN74HC541ANS
IC516	8-759-926-77	s	IC SN74HC541ANS
IC551 to IC558	8-752-352-30	s	IC CXD2705AQ
IC601	8-759-985-18	s	IC 74AC08SJ
IC602	8-759-043-67	s	IC CXD8307Q
IC603	8-752-352-30	s	IC CXD2705AQ
IC604	8-752-343-18	s	IC CXD2704Q
IC605	8-752-343-18	s	IC CXD2704Q
IC606	8-759-043-67	s	IC CXD8307Q
IC607	8-752-343-18	s	IC CXD2704Q
IC608	8-752-343-18	s	IC CXD2704Q
IC701 to IC709	8-759-985-18	s	IC 74AC08SJ
IC710	8-759-043-67	s	IC CXD8307Q
IC711	8-752-352-30	s	IC CXD2705AQ
IC712	8-752-352-30	s	IC CXD2705AQ
IC713	8-752-343-18	s	IC CXD2704Q
IC714	8-752-343-18	s	IC CXD2704Q
IC751 to IC758	8-759-985-18	s	IC 74AC08SJ
IC759	8-759-043-67	s	IC CXD8307Q
IC760	8-752-352-30	s	IC CXD2705AQ
IC761	8-752-352-30	s	IC CXD2705AQ
IC762	8-752-343-18	s	IC CXD2704Q
IC763	8-752-343-18	s	IC CXD2704Q
IC801	8-752-343-18	s	IC CXD2704Q
IC802	8-752-352-30	s	IC CXD2705AQ
IC803	8-752-352-30	s	IC CXD2705AQ
IC804	8-759-169-84	s	IC CXD8833Q
IC805	8-759-169-84	s	IC CXD8833Q
IC851	8-752-352-30	s	IC CXD2705AQ
IC852	8-752-352-30	s	IC CXD2705AQ
IC853	8-759-169-84	s	IC CXD8833Q
IC854	8-759-169-84	s	IC CXD8833Q
IC901	8-759-926-76	s	IC SN74HC540ANS

NOTE 1:Please see page 6-25 for the parts that are not listd in the parts list.

(MIX-16 BOARD/PROCESSOR)

Ref. No. or Q'ty	Part No.	SP	Description
IC902	8-759-926-76	s	IC SN74HC540ANS
IC903	8-759-926-76	s	IC SN74HC540ANS
IC904	8-759-926-76	s	IC SN74HC540ANS
IC905 to IC911	8-759-926-77	s	IC SN74HC541ANS
R1 to R5	1-216-667-11	s	METAL, CHIP 4.7K 0.5% 1/10W
R6	1-216-065-00	s	METAL, CHIP 4.7K 5% 1/10W
R7	1-216-065-00	s	METAL, CHIP 4.7K 5% 1/10W
R8	1-216-037-00	s	METAL, CHIP 330 5% 1/10W
R9	1-216-037-00	s	METAL, CHIP 330 5% 1/10W
R10	1-216-073-00	s	METAL, CHIP 10K 5% 1/10W
R11	1-216-073-00	s	METAL, CHIP 10K 5% 1/10W
R12	1-216-025-00	s	METAL, CHIP 100 5% 1/10W
R13	1-216-025-00	s	METAL, CHIP 100 5% 1/10W
R14	1-216-025-00	s	METAL, CHIP 100 5% 1/10W
R15	1-216-025-00	s	METAL, CHIP 100 5% 1/10W
R51	1-215-451-00	s	METAL 18K 1% 1/6W
R52	1-215-445-00	s	METAL 10K 1% 1/6W
R53	1-247-883-00	s	CARBON 150K 5% 1/4W
R54	1-249-393-11	s	CARBON 10 5% 1/4W
R55	1-249-441-11	s	CARBON 100K 5% 1/4W
R56	1-216-073-00	s	METAL, CHIP 10K 5% 1/10W
R57	1-216-073-00	s	METAL, CHIP 10K 5% 1/10W
R201	1-216-065-00	s	METAL, CHIP 4.7K 5% 1/10W
R202	1-216-065-00	s	METAL, CHIP 4.7K 5% 1/10W
R203	1-216-065-00	s	METAL, CHIP 4.7K 5% 1/10W
R204	1-216-065-00	s	METAL, CHIP 4.7K 5% 1/10W
RB101	1-235-194-00	s	RESISTOR BLOCK 4.7KX8
RB102	1-235-337-11	s	RESISTOR BLOCK 22KX8
RB103	1-235-337-11	s	RESISTOR BLOCK 22KX8
RB104	1-235-332-11	s	RESISTOR BLOCK 470X8
RB105	1-235-337-11	s	RESISTOR BLOCK 22KX8
RB201 to RB207	1-235-195-00	s	RESISTOR BLOCK 10KX8
RB301	1-235-195-00	s	RESISTOR BLOCK 10KX8
RB401	1-235-332-11	s	RESISTOR BLOCK 470X8
RB501 to RB505	1-235-195-00	s	RESISTOR BLOCK 10KX8
RB506	1-231-533-00	s	RESISTOR BLOCK 10Kx4
RB901	1-235-337-11	s	RESISTOR BLOCK 22KX8
RB902	1-235-337-11	s	RESISTOR BLOCK 22KX8
RB903	1-235-332-11	s	RESISTOR BLOCK 470X8
RB904	1-235-332-11	s	RESISTOR BLOCK 470X8
RB905	1-235-332-11	s	RESISTOR BLOCK 470X8
RB906	1-235-332-11	s	RESISTOR BLOCK 470X8
RB907	1-235-337-11	s	RESISTOR BLOCK 22KX8
RB908	1-235-337-11	s	RESISTOR BLOCK 22KX8
S101	1-554-937-11	s	SWITCH, PUSH
S102	1-570-266-11	s	SWITCH, PUSH (1 KEY)
S103	1-570-623-11	s	SWITCH, DIP 8-CKT
S901	1-570-623-11	s	SWITCH, DIP 8-CKT
S902	1-570-623-11	s	SWITCH, DIP 8-CKT
S903	1-570-623-11	s	SWITCH, DIP 8-CKT
S904	1-570-623-11	s	SWITCH, DIP 8-CKT
X1	1-577-258-11	s	CRYSTAL, 32MHz

NOTE 1:Please see page 6-25 for the parts that are not listd in the parts list.

(MIX-16 BOARD/PROCESSOR)

Ref. No. or Q'ty	Part No.	SP	Description
X2	1-577-170-11	s	CRYSTAL, 50MHz

PS-314 BOARD/PROCESSOR

Ref. No. or Q'ty	Part No.	SP	Description
1pc	A-8275-641-A	o	MOUNTED CIRCUIT BOARD, PS-314
1pc	4-030-359-01	o	HEAT SINK, H. PIN
1pc	7-682-548-04	s	SCREW +B 3X8
C1	1-124-584-00	s	ELECT 100uF 20% 10V
C2	1-101-004-00	s	CERAMIC 0.01uF 50V
C3	1-124-584-00	s	ELECT 100uF 20% 10V
C4	1-101-004-00	s	CERAMIC 0.01uF 50V
C5	1-124-584-00	s	ELECT 100uF 20% 10V
C6	1-101-004-00	s	CERAMIC 0.01uF 50V
C11	1-124-122-11	s	ELECT 100uF 20% 50V
C12	1-136-153-00	s	FILM 0.01uF 5% 50V
C13	1-124-122-11	s	ELECT 100uF 20% 50V
C14	1-136-153-00	s	FILM 0.01uF 5% 50V
C15	1-124-122-11	s	ELECT 100uF 20% 50V
C16	1-136-153-00	s	FILM 0.01uF 5% 50V
C21	1-124-122-11	s	ELECT 100uF 20% 50V
C22	1-136-153-00	s	FILM 0.01uF 5% 50V
C23	1-124-122-11	s	ELECT 100uF 20% 50V
C24	1-136-153-00	s	FILM 0.01uF 5% 50V
C25	1-124-122-11	s	ELECT 100uF 20% 50V
C26	1-136-153-00	s	FILM 0.01uF 5% 50V
CN1	1-564-943-11	o	CONNECTOR, 12P, MALE
CN2	1-564-241-00	o	CONNECTOR, 4P, MALE
CN3	1-506-599-11	o	PIN, CONNECTOR (B10P-VH) 10P
CN4	1-564-943-11	o	CONNECTOR, 12P, MALE
CN5	1-506-474-11	s	CONNECTOR 9P, MALE
CN6	1-564-002-11	s	PIN, CONNECTOR 3P
CN7	1-564-002-11	s	PIN, CONNECTOR 3P
CN8	1-564-002-11	s	PIN, CONNECTOR 3P
CN9	1-564-002-11	s	PIN, CONNECTOR 3P
D1	8-719-033-57	s	DIODE ESAE83-006
D2	8-719-500-30	s	DIODE S10SC4M
D3	8-719-500-31	s	DIODE S10SC4MR
D4	8-719-109-93	s	DIODE RD6.2ES-B2
FL1	1-236-071-11	s	ENCAPSULATED COMPONENT, LC
IC1	8-759-917-05	s	IC SN74HC541AN
IC2	8-759-007-09	s	IC MC74HC540N
PH1	8-719-946-27	s	IC PC837
PH2	8-719-946-27	s	IC PC837
R3	1-249-413-11	s	CARBON 470 5% 1/4W
R4	1-249-413-11	s	CARBON 470 5% 1/4W
R11	1-249-423-11	s	CARBON 3.3K 5% 1/4W
R12	1-249-423-11	s	CARBON 3.3K 5% 1/4W
R13	1-249-418-11	s	CARBON 1.2K 5% 1/4W
R14	1-249-418-11	s	CARBON 1.2K 5% 1/4W
R21	1-249-423-11	s	CARBON 3.3K 5% 1/4W
R22	1-249-423-11	s	CARBON 3.3K 5% 1/4W
R23	1-249-418-11	s	CARBON 1.2K 5% 1/4W
R24	1-249-418-11	s	CARBON 1.2K 5% 1/4W
R40 to R45	1-260-087-11	s	CARBON 100 5% 1/2W
RB1	1-235-192-00	s	RESISTOR BLOCK 1KX8

DMBK-4001 (OPTION)

CN-842 BOARD/DMBK-4001

Ref. No. or Q'ty	Part No.	SP	Description
1pc	A-8276-860-A	o	MOUNTED CIRCUIT BOARD, CN-842
14pcs	7-682-547-04	s	SCREW +B 3X6
3pcs	7-682-903-01	s	SCREW +PWH 3X5
CN1 to CN6	1-563-770-11	s	CONNECTOR, D-SUB 9P, FEMALE
CN7	1-563-771-11	s	CONNECTOR, D-SUB 15P, FEMALE
CN805	1-695-254-11	o	HEADER (RIGHT ANGLE TYPE) 50P
FL1 to FL36	1-236-163-11	s	ENCAPSULATED COMPONENT

NOTE 1:Please see page 6-25 for the parts that are not listd in the parts list.

CPU-146 BOARD/DMBK-4001

Ref. No. or Q'ty	Part No.	SP	Description
1pc	A-8275-627-A	o	MOUNTED CIRCUIT BOARD, CPU-146
C101	1-126-404-11	s	ELECT 4.7uF 20% 50V
C102	1-126-404-11	s	ELECT 4.7uF 20% 50V
C103	1-126-404-11	s	ELECT 4.7uF 20% 50V
C104	1-126-404-11	s	ELECT 4.7uF 20% 50V
C105	1-163-038-00	s	CAP, CHIP 0.1uF 25V
C106	1-126-405-11	s	ELECT, CHIP 10uF 20% 50V
C107 to C123	1-163-038-00	s	CAP, CHIP 0.1uF 25V
C201 to C206	1-163-038-00	s	CAP, CHIP 0.1uF 25V
C207	1-125-447-11	s	DOUBLE LAYERS 1FARAD 5.5V
C208	1-125-447-11	s	DOUBLE LAYERS 1FARAD 5.5V
C209	1-163-038-00	s	CAP, CHIP 0.1uF 25V
C301 to C315	1-163-038-00	s	CAP, CHIP 0.1uF 25V
C401 to C406	1-163-038-00	s	CAP, CHIP 0.1uF 25V
C501 to C518	1-163-038-00	s	CAP, CHIP 0.1uF 25V
C601 to C613	1-163-038-00	s	CAP, CHIP 0.1uF 25V
C701 to C709	1-163-038-00	s	CAP, CHIP 0.1uF 25V
C801	1-128-393-11	s	ELECT 100uF 20% 10V
C802	1-163-038-00	s	CAP, CHIP 0.1uF 25V
C803	1-126-928-11	s	ELECT 3300uF 20% 10V
C804	1-163-038-00	s	CAP, CHIP 0.1uF 25V
C805	1-128-393-11	s	ELECT 100uF 20% 10V
C806	1-163-038-00	s	CAP, CHIP 0.1uF 25V
CN1	1-563-890-21	s	CONNECTOR, D-SUB 9P, FEMALE
CN2	1-563-890-21	s	CONNECTOR, D-SUB 9P, FEMALE
CN800	1-564-241-00	o	CONNECTOR, 4P, MALE
CN801	1-695-249-11	o	HEADER (STRAIGHT) 50P
CN802	1-695-249-11	o	HEADER (STRAIGHT) 50P
CN803	1-580-194-21	o	CONNECTOR, PC BOARD (PLUG)100P
CNI112	1-526-816-21	s	SOCKET, IC (DP) 24P
CNI113	1-526-816-21	s	SOCKET, IC (DP) 24P
CNI114	1-526-656-00	s	SOCKET, IC (DP) 20P
CNI201	1-526-662-21	o	SOCKET, IC (DP) 40P
CNI202	1-526-659-00	o	SOCKET, IC 28P
D101	8-719-812-31	s	LED TLR123, RED
D102	8-719-812-31	s	LED TLR123, RED
D103 to D108	8-719-812-43	s	LED TLG124A, GRN
D201	8-719-987-87	s	DIODE ERA85-009
D301 to D308	8-719-812-43	s	LED TLG124A, GRN
FB401 to FB431	1-543-256-11	s	BEAD, FERRITE
FB501 to FB536	1-543-256-11	s	BEAD, FERRITE

(CPU-146 BOARD/DMBK-4001)

Ref. No. or Q'ty	Part No.	SP	Description
IC101	8-759-052-57	s	IC TMP68305F-16
IC102	8-759-521-15	s	IC MAX232CWE
IC103	8-759-989-91	s	IC TL7705ACPS
IC104	8-759-239-92	s	IC TC74HC07AF
IC105	8-759-925-76	s	IC SN74HC08ANS
IC106	8-759-925-80	s	IC SN74HC14ANS
IC107	8-759-926-07	s	IC SN74HC132ANS
IC108	8-759-244-12	s	IC TC74AC175F
IC109	8-759-926-23	s	IC SN74HC163ANS
IC110	8-759-989-03	s	IC 74F32SJ
IC111	8-759-948-01	s	IC 74F04SJ
IC112	8-759-260-83	o	IC 22V10B-146IC112-V1.0
IC113	8-759-260-85	o	IC 22V10B-146IC113-V1.0
IC114	8-759-260-86	o	IC 16V8B-146IC114-V1.0
IC115	8-759-926-76	s	IC SN74HC540ANS
IC116	8-759-926-54	s	IC SN74HC259ANS
IC201	8-759-260-84	o	IC 27C4002-REMCON-V1.00
IC202	8-759-097-08	s	IC DS1643-150
IC207	8-759-510-18	s	IC ICL7665ACSA
IC301	8-759-993-54	s	IC 74F541SJ
IC302	8-759-993-54	s	IC 74F541SJ
IC303	8-759-992-69	s	IC 74F245SJ
IC304	8-759-992-69	s	IC 74F245SJ
IC305	8-759-993-54	s	IC 74F541SJ
IC306	8-759-993-54	s	IC 74F541SJ
IC307	8-759-033-09	s	IC MC74F21M
IC308	8-759-926-11	s	IC SN74HC138ANS
IC309	8-759-926-11	s	IC SN74HC138ANS
IC310	8-759-926-11	s	IC SN74HC138ANS
IC311	8-759-926-11	s	IC SN74HC138ANS
IC312	8-759-926-76	s	IC SN74HC540ANS
IC313	8-759-926-69	s	IC SN74HC377ANS
IC314	8-759-926-76	s	IC SN74HC540ANS
IC315	8-759-926-69	s	IC SN74HC377ANS
IC401	8-759-973-43	s	IC MB8421-90LPFQ
IC402	8-759-926-62	s	IC SN74HC365ANS
IC403	8-759-926-49	s	IC SN74HC245NS
IC404	8-759-926-77	s	IC SN74HC541ANS
IC405	8-759-926-77	s	IC SN74HC541ANS
IC406	8-759-926-77	s	IC SN74HC541ANS
IC501	8-759-086-05	s	IC Z8523010VSC
IC502	8-759-061-67	s	IC MC34051M
IC503	8-759-086-05	s	IC Z8523010VSC
IC504	8-759-061-67	s	IC MC34051M
IC505	8-759-086-05	s	IC Z8523010VSC
IC506	8-759-061-67	s	IC MC34051M
IC507	8-759-926-76	s	IC SN74HC540ANS
IC508	8-759-926-69	s	IC SN74HC377ANS
IC509	8-759-051-53	s	IC TD62381F
IC510	8-759-244-12	s	IC TC74AC175F
IC601	8-759-234-67	s	IC TMP82C79M-2
IC602	8-759-051-53	s	IC TD62381F
IC603	8-759-926-11	s	IC SN74HC138ANS
IC604	8-759-232-86	s	IC TC74HC238AF
IC605	8-759-098-11	s	IC TD62783F
IC606	8-759-232-86	s	IC TC74HC238AF
IC607	8-759-098-11	s	IC TD62783F
IC608	8-759-234-67	s	IC TMP82C79M-2

NOTE 1:Please see page 6-25 for the parts that are not listd in the parts list.

(CPU-146 BOARD/DMBK-4001)

Ref. No. or Q'ty	Part No.	SP	Description
IC609	8-759-051-53	s	IC TD62381F
IC610	8-759-232-86	s	IC TC74HC238AF
IC611	8-759-098-11	s	IC TD62783F
IC612	8-759-232-86	s	IC TC74HC238AF
IC613	8-759-098-11	s	IC TD62783F
IC701	8-759-083-69	s	IC UPD4704G
IC702	8-759-149-10	s	IC UPD4702G
IC703	8-759-925-85	s	IC SN74HC32ANS
IC704	8-759-926-49	s	IC SN74HC245NS
IC705	8-759-926-77	s	IC SN74HC541ANS
IC706	8-759-926-77	s	IC SN74HC541ANS
IC707	8-759-926-11	s	IC SN74HC138ANS
IC708	8-759-925-90	s	IC SN74HC74ANS
IC709	8-759-076-03	s	IC MB88346BPF
L801	1-403-580-11	s	COIL, CHOKE
R101 to R108	1-216-065-00	s	METAL, CHIP 4.7K 5% 1/10W
R109	1-216-081-00	s	METAL, CHIP 22K 5% 1/10W
R110	1-216-049-00	s	METAL, CHIP 1K 5% 1/10W
R111	1-216-041-00	s	METAL, CHIP 470 5% 1/10W
R112	1-216-041-00	s	METAL, CHIP 470 5% 1/10W
R113	1-216-065-00	s	METAL, CHIP 4.7K 5% 1/10W
R114	1-216-065-00	s	METAL, CHIP 4.7K 5% 1/10W
R115	1-216-065-00	s	METAL, CHIP 4.7K 5% 1/10W
R116	1-216-081-00	s	METAL, CHIP 22K 5% 1/10W
R117	1-216-081-00	s	METAL, CHIP 22K 5% 1/10W
R118	1-220-258-11	s	RES, CHIP 100 5% 1/4W
R119	1-220-258-11	s	RES, CHIP 100 5% 1/4W
R120	1-220-258-11	s	RES, CHIP 100 5% 1/4W
R121	1-220-258-11	s	RES, CHIP 100 5% 1/4W
R122	1-216-081-00	s	METAL, CHIP 22K 5% 1/10W
R123	1-216-081-00	s	METAL, CHIP 22K 5% 1/10W
R124	1-216-081-00	s	METAL, CHIP 22K 5% 1/10W
R125	1-216-081-00	s	METAL, CHIP 22K 5% 1/10W
R126 to R131	1-216-041-00	s	METAL, CHIP 470 5% 1/10W
R132 to R136	1-216-081-00	s	METAL, CHIP 22K 5% 1/10W
R201	1-208-812-11	s	RES, CHIP 18K 0.50% 1/10W
R202	1-216-675-11	s	METAL, CHIP 10K 0.5% 1/10W
R203	1-216-101-00	s	METAL, CHIP 150K 5% 1/10W
R204	1-216-001-00	s	METAL, CHIP 10 5% 1/10W
R205	1-216-097-00	s	METAL, CHIP 100K 5% 1/10W
R301 to R308	1-216-041-00	s	METAL, CHIP 470 5% 1/10W
R401	1-216-081-00	s	METAL, CHIP 22K 5% 1/10W
R402	1-216-081-00	s	METAL, CHIP 22K 5% 1/10W
R403 to R407	1-216-049-00	s	METAL, CHIP 1K 5% 1/10W
R501	1-216-073-00	s	METAL, CHIP 10K 5% 1/10W
R502	1-216-073-00	s	METAL, CHIP 10K 5% 1/10W
R503	1-216-073-00	s	METAL, CHIP 10K 5% 1/10W
R504	1-216-073-00	s	METAL, CHIP 10K 5% 1/10W
R505	1-216-049-00	s	METAL, CHIP 1K 5% 1/10W
R506	1-216-049-00	s	METAL, CHIP 1K 5% 1/10W
R507	1-216-073-00	s	METAL, CHIP 10K 5% 1/10W

NOTE 1:Please see page 6-25 for the parts that are not listd in the parts list.

(CPU-146 BOARD/DMBK-4001)

Ref. No. or Q'ty	Part No.	SP	Description
R508	1-216-073-00	s	METAL, CHIP 10K 5% 1/10W
R509	1-216-073-00	s	METAL, CHIP 10K 5% 1/10W
R510	1-216-073-00	s	METAL, CHIP 10K 5% 1/10W
R511	1-216-049-00	s	METAL, CHIP 1K 5% 1/10W
R512	1-216-049-00	s	METAL, CHIP 1K 5% 1/10W
R513	1-216-073-00	s	METAL, CHIP 10K 5% 1/10W
R514	1-216-073-00	s	METAL, CHIP 10K 5% 1/10W
R515	1-216-073-00	s	METAL, CHIP 10K 5% 1/10W
R516	1-216-073-00	s	METAL, CHIP 10K 5% 1/10W
R517 to R526	1-216-049-00	s	METAL, CHIP 1K 5% 1/10W
R527	1-220-258-11	s	RES, CHIP 100 5% 1/4W
R601 to R616	1-220-234-11	s	RES, CHIP 4.7 10% 1/4W
RB101	1-239-307-11	s	RESISTOR ARRAY, CHIP 22K
RB301 to RB305	1-239-307-11	s	RESISTOR ARRAY, CHIP 22K
RB401	1-239-307-11	s	RESISTOR ARRAY, CHIP 22K
RB402	1-239-307-11	s	RESISTOR ARRAY, CHIP 22K
RB403	1-239-307-11	s	RESISTOR ARRAY, CHIP 22K
RB404	1-239-307-11	s	RESISTOR ARRAY, CHIP 22K
RB501	1-239-307-11	s	RESISTOR ARRAY, CHIP 22K
RB701	1-239-307-11	s	RESISTOR ARRAY, CHIP 22K
RB702	1-239-307-11	s	RESISTOR ARRAY, CHIP 22K
RB703	1-239-307-11	s	RESISTOR ARRAY, CHIP 22K
S101	1-554-937-11	s	SWITCH, PUSH
S102	1-570-266-11	s	SWITCH, PUSH (1 KEY)
S103	1-570-623-11	s	SWITCH, DIP 8-CKT
S601	1-570-623-11	s	SWITCH, DIP 8-CKT
TP103 to TP118	1-535-877-22	s	CHIP, CHECKER
X101	1-577-258-11	s	CRYSTAL, 32MHz
X501	1-577-541-11	s	OSCILLATOR, CRYSTAL (IC TYPE)

KY-302 BOARD/DMBK-4001

Ref. No. or Q'ty	Part No.	SP	Description
1pc	A-8275-628-A	o	MOUNTED CIRCUIT BOARD, KY-302
23pcs	1-692-757-11	s	SWITCH, TACTILE PUSH
7pcs	1-692-763-11	s	SWITCH, TACTILE PUSH
1pc	3-708-603-11	o	KEY TOP (1)
1pc	3-708-603-21	o	KEY TOP (1)
1pc	3-708-603-31	o	KEY TOP (1)
1pc	3-708-603-41	o	KEY TOP (1)
1pc	3-708-603-51	o	KEY TOP (1)
1pc	3-708-603-61	o	KEY TOP (1)
1pc	3-708-603-71	o	KEY TOP (1)
1pc	3-708-603-81	o	KEY TOP (1)
1pc	3-708-603-91	o	KEY TOP (1)
1pc	3-708-604-01	o	KEY TOP (1)
1pc	3-708-783-11	o	KEY TOP (1)
1pc	3-708-848-01	s	KEY TOP (LED)
1pc	3-708-848-11	s	KEY TOP (LED)
1pc	3-708-848-21	s	KEY TOP (LED)
1pc	3-708-848-31	s	KEY TOP (LED)
1pc	3-708-848-41	s	KEY TOP (LED)
1pc	3-708-848-51	s	KEY TOP (LED)
1pc	3-708-848-61	s	KEY TOP (LED)
1pc	3-708-848-71	s	KEY TOP (LED)
1pc	3-708-848-81	s	KEY TOP (LED)
1pc	3-708-849-01	s	KEY TOP (LED)
1pc	3-708-849-11	s	KEY TOP (LED)
1pc	3-708-849-21	s	KEY TOP (LED)
1pc	3-708-849-31	s	KEY TOP (LED)
1pc	3-708-849-41	s	KEY TOP (LED)
1pc	3-708-849-51	s	KEY TOP (LED)
1pc	3-708-849-61	s	KEY TOP (LED)
1pc	3-708-849-71	s	KEY TOP (LED)
1pc	3-708-849-81	s	KEY TOP (LED)
1pc	3-708-850-01	s	KEY TOP (LED)
1pc	3-708-850-11	s	KEY TOP (LED)
1pc	3-708-850-21	s	KEY TOP (LED)
1pc	3-708-850-31	s	KEY TOP
1pc	3-708-850-41	s	KEY TOP
1pc	3-708-851-01	s	KEY TOP (LED)
1pc	3-708-851-11	s	KEY TOP (LED)
1pc	3-708-851-21	s	KEY TOP
1pc	1-467-667-11	s	DISPLAY UNIT, LCD (LM20X21A)
8pcs	1-568-616-11	o	SOCKET, SIL 6P
8pcs	1-526-654-21	o	SOCKET, IC (DP) 16P
48pcs	3-176-197-01	o	HOLDER, LED
3pcs	4-937-336-01	o	HOLDER, LED
7pcs	7-682-547-04	s	SCREW +B 3X6
C101	1-163-038-00	s	CAP, CHIP 0.1uF 25V
CN804	1-750-896-21	o	CONNECTOR 100P
CN806	1-564-862-11	o	PIN, CONNECTOR (STRAIGHT) 20P
CN807	1-564-355-00	o	PIN HEADER 3P
CN808	1-506-469-11	s	CONNECTOR 4P, MALE
D101 to D120	8-719-404-35	s	DIODE MA141WK
D201	8-719-043-25	s	DIODE GL3E306
D202	8-719-043-25	s	DIODE GL3E306
D203	8-719-043-22	s	DIODE GL7E202
D204	8-719-043-22	s	DIODE GL7E202

NOTE 1:Please see page 6-25 for the parts that are not listd in the parts list.

(KY-302 BOARD/DMBK-4001)

Ref. No. or Q'ty	Part No.	SP	Description
D205	8-719-043-22	s	DIODE GL7E202
D206	8-719-043-22	s	DIODE GL7E202
D301	8-719-901-64	s	LED, LT-9200D RED
D302	8-719-901-66	s	DIODE LT-9200N
D303	8-719-901-65	s	LED, LT-9200H YELLOW
D304	8-719-901-64	s	LED, LT-9200D RED
D305	8-719-901-64	s	LED, LT-9200D RED
D306	8-719-901-66	s	DIODE LT-9200N
D307	8-719-901-65	s	LED, LT-9200H YELLOW
D308	8-719-901-64	s	LED, LT-9200D RED
D309	8-719-901-64	s	LED, LT-9200D RED
D310	8-719-901-66	s	DIODE LT-9200N
D311	8-719-901-65	s	LED, LT-9200H YELLOW
D312	8-719-901-64	s	LED, LT-9200D RED
D313	8-719-901-64	s	LED, LT-9200D RED
D314	8-719-901-66	s	DIODE LT-9200N
D315	8-719-901-65	s	LED, LT-9200H YELLOW
D316	8-719-901-64	s	LED, LT-9200D RED
D317	8-719-901-64	s	LED, LT-9200D RED
D318	8-719-901-66	s	DIODE LT-9200N
D319	8-719-901-65	s	LED, LT-9200H YELLOW
D320	8-719-901-64	s	LED, LT-9200D RED
D321	8-719-901-64	s	LED, LT-9200D RED
D322	8-719-901-66	s	DIODE LT-9200N
D323	8-719-901-65	s	LED, LT-9200H YELLOW
D324	8-719-901-64	s	LED, LT-9200D RED
D325	8-719-811-44	s	DIODE TLG114A
D326	8-719-811-43	s	DIODE TLY114A
D327	8-719-811-44	s	DIODE TLG114A
S30 to S38	1-692-763-11	s	SWITCH, TACTILE PUSH

DMBK-4003 (OPTION)

MT-94 BOARD/DMBK-4003

Ref. No. or Q'ty	Part No.	SP	Description
1pc	1-649-774-11	o	PRINTED CIRCUIT BOARD, MT-94
2pcs	7-682-548-04	s	SCREW +B 3X8
CN1	1-566-318-21	s	CONNECTOR, D-SUB 9P, MALE
CN2	1-506-703-11	o	POST HEADER, CONNECTOR ILG 4P
CN3	1-506-703-11	o	POST HEADER, CONNECTOR ILG 4P
R1	1-215-434-00	s	METAL 3.6K 1% 1/6W
R2	1-215-434-00	s	METAL 3.6K 1% 1/6W

DMBK-4007 (OPTION)

DP-131 BOARD/DMBK-4007

Ref. No. or Q'ty	Part No.	SP	Description

(For details for DP-131 board, see page 6-53.)

DMBK-4010 (OPTION)

IPM-48 BOARD/DMBK-4010

Ref. No. or Q'ty	Part No.	SP	Description

(For details for IPM-48 board, see page 6-71.)

KY-225 BOARD/DMBK-4010

Ref. No. or Q'ty	Part No.	SP	Description

(For details for KY-225 board, see page 6-34.)

LED-156 BOARD/DMBK-4010

Ref. No. or Q'ty	Part No.	SP	Description

(For details for LED-156 board, see page 6-34.)

MIX-16 BOARD/DMBK-4010

Ref. No. or Q'ty	Part No.	SP	Description

(For details for MIX-16 board, see page 6-74.)

SW-604 BOARD/DMBK-4010

Ref. No. or Q'ty	Part No.	SP	Description

(For details for SW-604 board, see page 6-41.)

SW-605 BOARD/DMBK-4010

Ref. No. or Q'ty	Part No.	SP	Description

(For details for SW-605 board, see page 6-41.)

DMBK-4011 (OPTION)

MIX-16 BOARD/DMBK-4011

Ref. No. or Q'ty	Part No.	SP	Description

(For details for MIX-16 board, see page 6-74.)

NOTE 1:Please see page 6-25 for the parts that are not listd in the parts list.

DMBK-4012 (OPTION)

AD-100 BOARD/DMBK-4012

Ref. No. or Q'ty	Part No.	SP	Description
1pc	A-8275-432-A	o	MOUNTED CIRCUIT BOARD, AD-100
1pc	2-280-622-71	o	SUPPORT (M3), HEXAGON
1pc	3-183-089-01	o	PLATE, SHIELD, PC BOARD
1pc	4-879-917-00	o	STAY, PC BOARD
1pc	7-627-556-77	s	SCREW,PRECISION +P2.6X6 TYPE 1
1pc	7-682-903-01	s	SCREW +PWH 3X5
2pcs	4-879-917-00	o	STAY, PC BOARD
3pcs	2-280-622-71	o	SUPPORT (M3), HEXAGON
3pcs	7-682-903-01	s	SCREW +PWH 3X5
18pcs	7-621-259-35	s	SCREW +P 2.6X5
C1	1-163-038-00	s	CERAMIC, CHIP 0.1uF 25V
C2	1-163-038-00	s	CERAMIC, CHIP 0.1uF 25V
C3	1-124-910-11	s	ELECT 47uF 20% 50V
C4	1-124-910-11	s	ELECT 47uF 20% 50V
C5 to C10	1-130-483-00	s	MYLAR 0.01uF 5% 50V
C11 to C18	1-124-915-11	s	ELECT 10uF 20% 63V
C19	1-130-483-00	s	MYLAR 0.01uF 5% 50V
C20	1-130-483-00	s	MYLAR 0.01uF 5% 50V
C21	1-130-483-00	s	MYLAR 0.01uF 5% 50V
C22	1-163-038-00	s	CERAMIC, CHIP 0.1uF 25V
C23	1-163-038-00	s	CERAMIC, CHIP 0.1uF 25V
C24	1-136-169-00	s	MYLAR 0.22uF 5% 50V
C25	1-136-169-00	s	MYLAR 0.22uF 5% 50V
C26	1-102-963-00	s	CERAMIC 33PF 5% 50V
C27	1-102-963-00	s	CERAMIC 33PF 5% 50V
C28	1-102-963-00	s	CERAMIC 33PF 5% 50V
C101	1-126-233-11	s	ELECT 22uF 20% 50V
C102	1-102-963-00	s	CERAMIC 33PF 5% 50V
C103	1-130-483-00	s	MYLAR 0.01uF 5% 50V
C104	1-124-910-11	s	ELECT 47uF 20% 50V
C106	1-130-479-00	s	MYLAR 0.0047uF 5% 50V
C107	1-130-483-00	s	MYLAR 0.01uF 5% 50V
C108	1-130-472-00	s	MYLAR 0.0012uF 5% 50V
C109	1-130-472-00	s	MYLAR 0.0012uF 5% 50V
C110	1-137-505-11	s	FILM 220PF 5% 100V
C111	1-130-472-00	s	MYLAR 0.0012uF 5% 50V
C112	1-130-472-00	s	MYLAR 0.0012uF 5% 50V
C113	1-164-346-11	s	CERAMIC 1uF 16V
C114	1-163-038-00	s	CERAMIC, CHIP 0.1uF 25V
C115	1-164-346-11	s	CERAMIC 1uF 16V
C116	1-164-346-11	s	CERAMIC 1uF 16V
C117	1-164-346-11	s	CERAMIC 1uF 16V
C118	1-130-483-00	s	MYLAR 0.01uF 5% 50V
C119	1-130-483-00	s	MYLAR 0.01uF 5% 50V
C120	1-104-664-11	s	ELECT 47uF 20% 25V
C121	1-124-915-11	s	ELECT 10uF 20% 63V
C122	1-124-915-11	s	ELECT 10uF 20% 63V
C199	1-102-963-00	s	CERAMIC 33PF 5% 50V
C201	1-126-233-11	s	ELECT 22uF 20% 50V
C202	1-102-963-00	s	CERAMIC 33PF 5% 50V
C203	1-130-483-00	s	MYLAR 0.01uF 5% 50V
C204	1-124-910-11	s	ELECT 47uF 20% 50V
C206	1-130-479-00	s	MYLAR 0.0047uF 5% 50V
C207	1-130-483-00	s	MYLAR 0.01uF 5% 50V
C208	1-130-472-00	s	MYLAR 0.0012uF 5% 50V
C209	1-130-472-00	s	MYLAR 0.0012uF 5% 50V

NOTE 1:Please see page 6-25 for the parts that are not listd in the parts list.

(AD-100 BOARD/DMBK-4012)

Ref. No. or Q'ty	Part No.	SP	Description
C210	1-137-505-11	s	FILM 220PF 5% 100V
C211	1-130-472-00	s	MYLAR 0.0012uF 5% 50V
C212	1-130-472-00	s	MYLAR 0.0012uF 5% 50V
C213	1-164-346-11	s	CERAMIC 1uF 16V
C214	1-163-038-00	s	CERAMIC, CHIP 0.1uF 25V
C215	1-164-346-11	s	CERAMIC 1uF 16V
C216	1-164-346-11	s	CERAMIC 1uF 16V
C217	1-164-346-11	s	CERAMIC 1uF 16V
C218	1-130-483-00	s	MYLAR 0.01uF 5% 50V
C219	1-130-483-00	s	MYLAR 0.01uF 5% 50V
C220	1-104-664-11	s	ELECT 47uF 20% 25V
C299	1-102-963-00	s	CERAMIC 33PF 5% 50V
C301	1-124-916-11	s	ELECT 22uF 20% 63V
C302	1-124-916-11	s	ELECT 22uF 20% 63V
C303	1-126-233-11	s	ELECT 22uF 20% 50V
C304	1-130-479-00	s	MYLAR 0.0047uF 5% 50V
C305	1-102-973-00	s	CERAMIC 100PF 5% 50V
C306	1-102-973-00	s	CERAMIC 100PF 5% 50V
C307	1-126-768-11	s	ELECT 2200uF 20% 16V
C308	1-124-910-11	s	ELECT 47uF 20% 50V
C309	1-102-963-00	s	CERAMIC 33PF 5% 50V
C310	1-130-483-00	s	MYLAR 0.01uF 5% 50V
C311	1-130-483-00	s	MYLAR 0.01uF 5% 50V
C312	1-124-910-11	s	ELECT 47uF 20% 50V
C313	1-124-910-11	s	ELECT 47uF 20% 50V
C314	1-102-963-00	s	CERAMIC 33PF 5% 50V
C315	1-124-910-11	s	ELECT 47uF 20% 50V
C316	1-124-910-11	s	ELECT 47uF 20% 50V
C317	1-102-963-00	s	CERAMIC 33PF 5% 50V
C318	1-130-483-00	s	MYLAR 0.01uF 5% 50V
C319	1-130-483-00	s	MYLAR 0.01uF 5% 50V
C320	1-124-910-11	s	ELECT 47uF 20% 50V
C321	1-124-910-11	s	ELECT 47uF 20% 50V
C322	1-126-025-11	s	ELECT 330uF 20% 25V
C323	1-126-025-11	s	ELECT 330uF 20% 25V
C324	1-126-233-11	s	ELECT 22uF 20% 50V
C325	1-126-233-11	s	ELECT 22uF 20% 50V
C326	1-102-973-00	s	CERAMIC 100PF 5% 50V
C327	1-102-973-00	s	CERAMIC 100PF 5% 50V
C328	1-102-973-00	s	CERAMIC 100PF 5% 50V
C329	1-101-880-00	s	CERAMIC 47PF 5% 50V
C330	1-101-880-00	s	CERAMIC 47PF 5% 50V
C331	1-130-483-00	s	MYLAR 0.01uF 5% 50V
C332	1-130-483-00	s	MYLAR 0.01uF 5% 50V
C333	1-124-910-11	s	ELECT 47uF 20% 50V
C334	1-102-963-00	s	CERAMIC 33PF 5% 50V
C335	1-124-910-11	s	ELECT 47uF 20% 50V
C336	1-124-903-11	s	ELECT 1uF 20% 50V
C337	1-130-483-00	s	MYLAR 0.01uF 5% 50V
C338	1-130-483-00	s	MYLAR 0.01uF 5% 50V
C339	1-102-973-00	s	CERAMIC 100PF 5% 50V
C340	1-102-973-00	s	CERAMIC 100PF 5% 50V
C341	1-126-233-11	s	ELECT 22uF 20% 50V
C342	1-126-233-11	s	ELECT 22uF 20% 50V
C343	1-124-910-11	s	ELECT 47uF 20% 50V
C344	1-124-915-11	s	ELECT 10uF 20% 63V
C345	1-102-963-00	s	CERAMIC 33PF 5% 50V
C346	1-124-915-11	s	ELECT 10uF 20% 63V
C347	1-130-483-00	s	MYLAR 0.01uF 5% 50V

NOTE 2:For the # marked in the following parts list, refer to section 7, Changed Parts.

(AD-100 BOARD/DMBK-4012)

Ref. No. or Q'ty	Part No.	SP	Description
C348	1-130-483-00	s	MYLAR 0.01uF 5% 50V
C349	1-124-915-11	s	ELECT 10uF 20% 63V
C350	1-102-963-00	s	CERAMIC 33PF 5% 50V
C351	1-126-233-11	s	ELECT 22uF 20% 50V
C352	1-124-915-11	s	ELECT 10uF 20% 63V
C353	1-102-963-00	s	CERAMIC 33PF 5% 50V
C354	1-124-910-11	s	ELECT 47uF 20% 50V
C355 to C362	1-130-483-00	s	MYLAR 0.01uF 5% 50V
C363	1-126-947-11	s	ELECT 47uF 20% 35V
C364	1-126-947-11	s	ELECT 47uF 20% 35V
C365	1-124-915-11	s	ELECT 10uF 20% 63V
C366	1-124-915-11	s	ELECT 10uF 20% 63V
C367	1-130-483-00	s	MYLAR 0.01uF 5% 50V
C368	1-130-483-00	s	MYLAR 0.01uF 5% 50V
C369	1-126-768-11	s	ELECT 2200uF 20% 16V
C370	1-126-924-11	s	ELECT 330uF 20% 10V
C371	1-130-483-00	s	MYLAR 0.01uF 5% 50V
C372 to C386	1-102-973-00	s	CERAMIC 100PF 5% 50V
C387	1-130-483-00	s	MYLAR 0.01uF 5% 50V
#C391	1-164-182-11	s	CERAMIC, CHIP 0.0033uF 10% 100V
#C392	1-164-182-11	s	CERAMIC, CHIP 0.0033uF 10% 100V
#C393	1-164-182-11	s	CERAMIC, CHIP 0.0033uF 10% 100V
C399	1-130-483-00	s	MYLAR 0.01uF 5% 50V
C401	1-163-038-00	s	CERAMIC, CHIP 0.1uF 25V
C402	1-163-038-00	s	CERAMIC, CHIP 0.1uF 25V
C403	1-130-471-00	s	MYLAR 0.001uF 5% 50V
C404	1-163-038-00	s	CERAMIC, CHIP 0.1uF 25V
C405	1-163-038-00	s	CERAMIC, CHIP 0.1uF 25V
C406	1-102-963-00	s	CERAMIC 33PF 5% 50V
C407 to C412	1-163-038-00	s	CERAMIC, CHIP 0.1uF 25V
#C413	1-126-964-11	s	ELECT 10uF 20% 50V
C501	1-124-916-11	s	ELECT 22uF 20% 63V
C502	1-124-916-11	s	ELECT 22uF 20% 63V
C503	1-126-233-11	s	ELECT 22uF 20% 50V
C504	1-130-479-00	s	MYLAR 0.0047uF 5% 50V
C505	1-102-973-00	s	CERAMIC 100PF 5% 50V
C506	1-102-973-00	s	CERAMIC 100PF 5% 50V
C507	1-126-768-11	s	ELECT 2200uF 20% 16V
C508	1-124-910-11	s	ELECT 47uF 20% 50V
C509	1-102-963-00	s	CERAMIC 33PF 5% 50V
C510	1-130-483-00	s	MYLAR 0.01uF 5% 50V
C511	1-130-483-00	s	MYLAR 0.01uF 5% 50V
C512	1-124-910-11	s	ELECT 47uF 20% 50V
C513	1-124-910-11	s	ELECT 47uF 20% 50V
C514	1-102-963-00	s	CERAMIC 33PF 5% 50V
C515	1-124-910-11	s	ELECT 47uF 20% 50V
C516	1-124-910-11	s	ELECT 47uF 20% 50V
C517	1-102-963-00	s	CERAMIC 33PF 5% 50V
C518	1-130-483-00	s	MYLAR 0.01uF 5% 50V
C519	1-130-483-00	s	MYLAR 0.01uF 5% 50V
C520	1-124-910-11	s	ELECT 47uF 20% 50V
C521	1-124-910-11	s	ELECT 47uF 20% 50V
C522	1-126-025-11	s	ELECT 330uF 20% 25V
C523	1-126-025-11	s	ELECT 330uF 20% 25V
C524	1-126-233-11	s	ELECT 22uF 20% 50V

NOTE 1:Please see page 6-25 for the parts that are not listd in the parts list.

(AD-100 BOARD/DMBK-4012)

Ref. No. or Q'ty	Part No.	SP	Description
C525	1-126-233-11	s	ELECT 22uF 20% 50V
C526	1-102-973-00	s	CERAMIC 100PF 5% 50V
C527	1-102-973-00	s	CERAMIC 100PF 5% 50V
C528	1-102-973-00	s	CERAMIC 100PF 5% 50V
C529	1-101-880-00	s	CERAMIC 47PF 5% 50V
C530	1-101-880-00	s	CERAMIC 47PF 5% 50V
C531	1-130-483-00	s	MYLAR 0.01uF 5% 50V
C532	1-130-483-00	s	MYLAR 0.01uF 5% 50V
C533	1-124-910-11	s	ELECT 47uF 20% 50V
C534	1-102-963-00	s	CERAMIC 33PF 5% 50V
C535	1-124-910-11	s	ELECT 47uF 20% 50V
C536	1-124-903-11	s	ELECT 1uF 20% 50V
C537	1-130-483-00	s	MYLAR 0.01uF 5% 50V
C538	1-130-483-00	s	MYLAR 0.01uF 5% 50V
C539	1-102-973-00	s	CERAMIC 100PF 5% 50V
C540	1-102-973-00	s	CERAMIC 100PF 5% 50V
C541	1-126-233-11	s	ELECT 22uF 20% 50V
C542	1-126-233-11	s	ELECT 22uF 20% 50V
C543	1-124-910-11	s	ELECT 47uF 20% 50V
C544	1-124-915-11	s	ELECT 10uF 20% 63V
C545	1-102-963-00	s	CERAMIC 33PF 5% 50V
C546	1-124-915-11	s	ELECT 10uF 20% 63V
C547	1-130-483-00	s	MYLAR 0.01uF 5% 50V
C548	1-130-483-00	s	MYLAR 0.01uF 5% 50V
C549	1-124-915-11	s	ELECT 10uF 20% 63V
C550	1-102-963-00	s	CERAMIC 33PF 5% 50V
C551	1-126-233-11	s	ELECT 22uF 20% 50V
C552	1-124-915-11	s	ELECT 10uF 20% 63V
C553	1-102-963-00	s	CERAMIC 33PF 5% 50V
C554	1-124-910-11	s	ELECT 47uF 20% 50V
C555 to C562	1-130-483-00	s	MYLAR 0.01uF 5% 50V
C563	1-126-947-11	s	ELECT 47uF 20% 35V
C564	1-126-947-11	s	ELECT 47uF 20% 35V
C565	1-124-915-11	s	ELECT 10uF 20% 63V
C566	1-124-915-11	s	ELECT 10uF 20% 63V
C567	1-130-483-00	s	MYLAR 0.01uF 5% 50V
C568	1-130-483-00	s	MYLAR 0.01uF 5% 50V
C569	1-126-768-11	s	ELECT 2200uF 20% 16V
C572 to C582	1-102-973-00	s	CERAMIC 100PF 5% 50V
C584	1-102-973-00	s	CERAMIC 100PF 5% 50V
C585	1-102-973-00	s	CERAMIC 100PF 5% 50V
C586	1-102-973-00	s	CERAMIC 100PF 5% 50V
#C591	1-164-182-11	s	CERAMIC, CHIP 0.0033uF 10% 100V
#C592	1-164-182-11	s	CERAMIC, CHIP 0.0033uF 10% 100V
#C593	1-164-182-11	s	CERAMIC, CHIP 0.0033uF 10% 100V
C599	1-130-483-00	s	MYLAR 0.01uF 5% 50V
C601	1-163-038-00	s	CERAMIC, CHIP 0.1uF 25V
C602	1-163-038-00	s	CERAMIC, CHIP 0.1uF 25V
C603	1-163-038-00	s	CERAMIC, CHIP 0.1uF 25V
C604	1-163-038-00	s	CERAMIC, CHIP 0.1uF 25V
#C605	1-126-923-11	s	ELECT 220uF 20% 10V
C606	1-163-038-00	s	CERAMIC, CHIP 0.1uF 25V
C607	1-102-963-00	s	CERAMIC 33PF 5% 50V
C608	1-102-963-00	s	CERAMIC 33PF 5% 50V
C609	1-163-038-00	s	CERAMIC, CHIP 0.1uF 25V

NOTE 2:For the # marked in the following parts list, refer to section 7, Changed Parts.

(AD-100 BOARD/DMBK-4012)

Ref. No. or Q'ty	Part No.	SP	Description
CN301	1-695-252-11	o	HEADER (RIGHT ANGLE TYPE) 26P
CN302	1-569-050-11	o	CONNECTOR, PS TYPE 34P, MALE
CN611	1-564-411-11	o	PIN, CONNECTOR 50P
CN701	1-568-006-11	s	CONNECTOR, XLR 3P, FEMALE
CN702	1-568-006-11	s	CONNECTOR, XLR 3P, FEMALE
CN703	1-568-005-11	s	CONNECTOR, XLR 3P, MALE
CN704	1-568-006-11	s	CONNECTOR, XLR 3P, FEMALE
CN705	1-568-006-11	s	CONNECTOR, XLR 3P, FEMALE
CN706	1-568-006-11	s	CONNECTOR, XLR 3P, FEMALE
CN707	1-568-005-11	s	CONNECTOR, XLR 3P, MALE
CN708	1-568-006-11	s	CONNECTOR, XLR 3P, FEMALE
CN709	1-568-005-11	s	CONNECTOR, XLR 3P, MALE
CN710	1-563-771-11	s	CONNECTOR, D-SUB 15P, FEMALE
CN711	1-560-755-00	o	CONNECTOR, 16P, MALE
#CN712	1-764-825-11	s	HEADER (RIGHT ANGLE TYPE) 10P
CN715	1-506-599-11	o	PIN, CONNECTOR (B10P-VH) 10P
CNI1	1-526-659-00	o	SOCKET, IC (DP) 28P
CNI601	1-526-659-00	o	SOCKET, IC (DP) 28P
D1	8-719-948-47	s	DIODE HSM88AS
D2	8-719-948-47	s	DIODE HSM88AS
D3	8-719-801-78	s	DIODE 1SS184
D4 to D8	8-719-948-47	s	DIODE HSM88AS
D101	8-719-801-78	s	DIODE 1SS184
D102	8-719-801-78	s	DIODE 1SS184
D201	8-719-801-78	s	DIODE 1SS184
D202	8-719-801-78	s	DIODE 1SS184
D301	8-719-157-36	s	DIODE RD6.8M-B
D302	8-719-157-36	s	DIODE RD6.8M-B
D303	8-719-157-36	s	DIODE RD6.8M-B
D304	8-719-157-36	s	DIODE RD6.8M-B
D305	8-719-801-78	s	DIODE 1SS184
D306 to D313	8-719-106-88	s	DIODE RD15M-B1
D314	8-719-801-78	s	DIODE 1SS184
D315	8-719-801-78	s	DIODE 1SS184
D316	8-719-106-88	s	DIODE RD15M-B1
D317	8-719-106-88	s	DIODE RD15M-B1
D318	8-719-106-88	s	DIODE RD15M-B1
D319	8-719-106-88	s	DIODE RD15M-B1
D320	8-719-200-02	s	DIODE 10E2
D321	8-719-200-02	s	DIODE 10E2
D322	8-719-200-02	s	DIODE 10E2
D323	8-719-200-02	s	DIODE 10E2
D324 to D328	8-719-801-78	s	DIODE 1SS184
D401	8-719-911-19	s	DIODE 1SS119
D402	8-719-911-19	s	DIODE 1SS119
D501	8-719-157-36	s	DIODE RD6.8M-B
D502	8-719-157-36	s	DIODE RD6.8M-B
D503	8-719-157-36	s	DIODE RD6.8M-B
D504	8-719-157-36	s	DIODE RD6.8M-B
D505	8-719-801-78	s	DIODE 1SS184
D506 to D513	8-719-106-88	s	DIODE RD15M-B1
D514	8-719-801-78	s	DIODE 1SS184
D515	8-719-801-78	s	DIODE 1SS184

NOTE 1:Please see page 6-25 for the parts that are not listd in the parts list.

(AD-100 BOARD/DMBK-4012)

Ref. No. or Q'ty	Part No.	SP	Description
D516	8-719-106-88	s	DIODE RD15M-B1
D517	8-719-106-88	s	DIODE RD15M-B1
D518	8-719-106-88	s	DIODE RD15M-B1
D519	8-719-106-88	s	DIODE RD15M-B1
D520	8-719-200-02	s	DIODE 10E2
D521	8-719-200-02	s	DIODE 10E2
D522	8-719-200-02	s	DIODE 10E2
D523	8-719-200-02	s	DIODE 10E2
D524 to D528	8-719-801-78	s	DIODE 1SS184
D601	8-719-911-19	s	DIODE 1SS119
DD301	1-647-398-11	s	CONVERTER, UNIT DC-DC
FB1	1-412-694-11	s	INDUCTOR, BEAD
FB2	1-412-694-11	s	INDUCTOR, BEAD
FB3	1-412-694-11	s	INDUCTOR, BEAD
FB301 to FB315	1-412-694-11	s	INDUCTOR, BEAD
FB501 to FB514	1-412-694-11	s	INDUCTOR, BEAD
FL401	1-424-008-11	s	FILTER, NOISE (SIGNAL LINE)
IC1	8-759-197-36	s	IC PCM1760P
IC2	8-759-197-35	s	IC DF1760P
IC3	8-759-231-53	s	IC TA7805S
IC4	8-759-245-79	s	IC TA79005S
IC6	8-759-925-76	s	IC SN74HC08NS
IC101	8-759-900-72	s	IC NE5532P
IC102	8-759-917-06	s	IC SN74HC574N
IC103	8-759-908-16	s	IC TL072CPS
IC110	8-759-062-88	s	IC CXD8277Q
IC111	8-759-092-81	s	IC SN75158PS
IC201	8-759-900-72	s	IC NE5532P
IC202	8-759-917-06	s	IC SN74HC574N
IC203	8-759-908-16	s	IC TL072CPS
IC301	8-759-158-98	s	IC SSM-2017P
IC302	8-759-900-72	s	IC NE5532P
IC303	8-759-900-72	s	IC NE5532P
IC304	8-759-900-72	s	IC NE5532P
IC305	1-808-838-11	s	HIC TAA-1S
IC306	8-759-990-62	s	IC TL062CP
IC307	8-759-900-72	s	IC NE5532P
IC308	8-759-925-80	s	IC SN74HC14NS
IC309	8-759-231-59	s	IC TA7815S
IC310	8-759-245-87	s	IC TA79015S
IC311	8-759-107-35	s	IC UPD5201C
IC312	8-759-107-35	s	IC UPD5201C
IC313	8-759-925-85	s	IC SN74HC32NS
IC401	8-752-306-51	s	IC CX23065A
IC402	8-759-033-16	s	IC MC74F74M
IC403	8-759-951-24	s	IC SN75124N
IC404	8-759-927-18	s	IC SN74HCT541NS
IC405	8-759-030-52	s	IC MC74F163AM
IC406	8-759-030-52	s	IC MC74F163AM
IC407	8-759-927-23	s	IC SN74HCT574NS
IC408	8-759-927-17	s	IC SN74HCT540NS
IC409	8-759-233-66	s	IC TC74HCT04AF
IC501	8-759-158-98	s	IC SSM-2017P

NOTE 2:For the # marked in the following parts list, refer to section 7, Changed Parts.

(AD-100 BOARD/DMBK-4012)

Ref. No. or Q'ty	Part No.	SP	Description
IC502	8-759-900-72	s	IC NE5532P
IC503	8-759-900-72	s	IC NE5532P
IC504	8-759-900-72	s	IC NE5532P
IC505	1-808-838-11	s	HIC TAA-1S
IC506	8-759-990-62	s	IC TL062CP
IC507	8-759-900-72	s	IC NE5532P
IC508	8-759-925-80	s	IC SN74HC14NS
IC509	8-759-231-59	s	IC TA7815S
IC510	8-759-245-87	s	IC TA79015S
IC511	8-759-107-35	s	IC UPD5201C
IC512	8-759-107-35	s	IC UPD5201C
IC513	8-759-925-85	s	IC SN74HC32NS
IC601	8-759-274-94	o	IC 27C256B-AD100-V1.00
IC602	8-759-144-67	s	IC UPD43256AGU-12L
IC603	8-759-072-59	s	IC TMPZ84C011BF-6
IC604	8-759-926-07	s	IC SN74HC132NS
IC605	8-759-247-69	o	IC 16V8B-AD100#1V1.0
IC606	8-759-233-56	s	IC TC74HC688AF
ICI601	1-526-659-00	o	SOCKET, IC 28P
ICI605	1-526-656-00	s	SOCKET, IC (DP) 20P
JW1	1-535-303-00	o	WIRE, JUMPER
JW104	1-535-303-00	o	WIRE, JUMPER
JW204	1-535-303-00	o	WIRE, JUMPER
JW301	1-535-303-00	o	WIRE, JUMPER
JW303	1-535-303-00	o	WIRE, JUMPER
JW305	1-535-303-00	o	WIRE, JUMPER
JW307	1-535-303-00	o	WIRE, JUMPER
JW309	1-535-303-00	o	WIRE, JUMPER
JW311	1-535-303-00	o	WIRE, JUMPER
JW313	1-535-303-00	o	WIRE, JUMPER
JW315	1-535-303-00	o	WIRE, JUMPER
JW317	1-535-303-00	o	WIRE, JUMPER
JW320	1-535-303-00	o	WIRE, JUMPER
JW501	1-535-303-00	o	WIRE, JUMPER
JW503	1-535-303-00	o	WIRE, JUMPER
JW505	1-535-303-00	o	WIRE, JUMPER
JW507	1-535-303-00	o	WIRE, JUMPER
JW509	1-535-303-00	o	WIRE, JUMPER
JW511	1-535-303-00	o	WIRE, JUMPER
JW513	1-535-303-00	o	WIRE, JUMPER
JW515	1-535-303-00	o	WIRE, JUMPER
JW517	1-535-303-00	o	WIRE, JUMPER
JW520	1-535-303-00	o	WIRE, JUMPER
L301	1-409-339-00	s	COIL, CHOKE
Q101	8-729-800-43	s	TRANSISTOR 2SK152-3
Q102	8-729-800-43	s	TRANSISTOR 2SK152-3
Q103	8-729-800-43	s	TRANSISTOR 2SK152-3
Q201	8-729-800-43	s	TRANSISTOR 2SK152-3
Q202	8-729-800-43	s	TRANSISTOR 2SK152-3
Q203	8-729-800-43	s	TRANSISTOR 2SK152-3
Q301 to Q305	8-729-809-04	s	TRANSISTOR 2SC4133
Q501	8-729-809-04	s	TRANSISTOR 2SC4133
Q503	8-729-809-04	s	TRANSISTOR 2SC4133
Q504	8-729-809-04	s	TRANSISTOR 2SC4133
Q505	8-729-809-04	s	TRANSISTOR 2SC4133

NOTE 1:Please see page 6-25 for the parts that are not listd in the parts list.

(AD-100 BOARD/DMBK-4012)

Ref. No. or Q'ty	Part No.	SP	Description
R1	1-216-635-11	s	METAL, CHIP 220 0.5% 1/10W
R2	1-216-693-11	s	METAL, CHIP 56K 0.5% 1/10W
R3	1-216-687-11	s	METAL, CHIP 33K 0.5% 1/10W
R4	1-216-687-11	s	METAL, CHIP 33K 0.5% 1/10W
R5	1-216-699-11	s	METAL, CHIP 100K 0.5% 1/10W
R6	1-216-675-11	s	METAL, CHIP 10K 0.5% 1/10W
R7	1-216-635-11	s	METAL, CHIP 220 0.5% 1/10W
R8	1-216-603-11	s	METAL, CHIP 10 0.5% 1/10W
R9	1-216-603-11	s	METAL, CHIP 10 0.5% 1/10W
R10	1-216-635-11	s	METAL, CHIP 220 0.5% 1/10W
R101	1-216-017-00	s	METAL, CHIP 47 5% 1/10W
R102	1-216-699-11	s	METAL, CHIP 100K 0.5% 1/10W
R103	1-216-699-11	s	METAL, CHIP 100K 0.5% 1/10W
R105	1-215-445-00	s	METAL 10K 1% 1/6W
R106	1-215-415-00	s	METAL 560 1% 1/6W
R107	1-216-651-11	s	METAL, CHIP 1K 0.5% 1/10W
R108	1-215-421-00	s	METAL 1K 1% 1/6W
R109	1-215-445-00	s	METAL 10K 1% 1/6W
R111	1-215-493-00	s	METAL 1M 1% 1/6W
R112	1-216-651-11	s	METAL, CHIP 1K 0.5% 1/10W
R113	1-216-659-11	s	METAL, CHIP 2.2K 0.5% 1/10W
R114	1-216-679-11	s	METAL, CHIP 15K 0.5% 1/10W
R115	1-216-679-11	s	METAL, CHIP 15K 0.5% 1/10W
R116	1-216-699-11	s	METAL, CHIP 100K 0.5% 1/10W
R117	1-216-660-11	s	METAL, CHIP 2.4K 0.5% 1/10W
R118	1-216-643-11	s	METAL, CHIP 470 0.5% 1/10W
R119	1-216-659-11	s	METAL, CHIP 2.2K 0.5% 1/10W
R120	1-216-643-11	s	METAL, CHIP 470 0.5% 1/10W
R121	1-216-653-11	s	METAL, CHIP 1.2K 0.5% 1/10W
#R122	1-216-650-11	s	METAL, CHIP 910 0.5% 1/10W
R123	1-215-439-00	s	METAL 5.6K 1% 1/6W
R124	1-216-697-11	s	METAL, CHIP 82K 0.5% 1/10W
R125	1-216-694-11	s	METAL, CHIP 62K 0.5% 1/10W
R126	1-216-689-11	s	METAL, CHIP 39K 0.5% 1/10W
R127	1-216-687-11	s	METAL, CHIP 33K 0.5% 1/10W
R128	1-216-688-11	s	METAL, CHIP 36K 0.5% 1/10W
R129	1-216-681-11	s	METAL, CHIP 18K 0.5% 1/10W
R130	1-216-691-11	s	METAL, CHIP 47K 0.5% 1/10W
R131	1-216-651-11	s	METAL, CHIP 1K 0.5% 1/10W
R132	1-216-651-11	s	METAL, CHIP 1K 0.5% 1/10W
R133	1-216-682-11	s	METAL, CHIP 20K 0.5% 1/10W
R134	1-216-682-11	s	METAL, CHIP 20K 0.5% 1/10W
R135	1-215-421-00	s	METAL 1K 1% 1/6W
R136	1-215-493-00	s	METAL 1M 1% 1/6W
R137	1-215-493-00	s	METAL 1M 1% 1/6W
R138	1-215-493-00	s	METAL 1M 1% 1/6W
R201	1-216-017-00	s	METAL, CHIP 47 5% 1/10W
R202	1-216-699-11	s	METAL, CHIP 100K 0.5% 1/10W
R203	1-216-699-11	s	METAL, CHIP 100K 0.5% 1/10W
R205	1-215-445-00	s	METAL 10K 1% 1/6W
R206	1-215-415-00	s	METAL 560 1% 1/6W
R207	1-216-651-11	s	METAL, CHIP 1K 0.5% 1/10W
R208	1-215-421-00	s	METAL 1K 1% 1/6W
R209	1-215-445-00	s	METAL 10K 1% 1/6W
R211	1-215-493-00	s	METAL 1M 1% 1/6W
R212	1-216-651-11	s	METAL, CHIP 1K 0.5% 1/10W
R213	1-216-659-11	s	METAL, CHIP 2.2K 0.5% 1/10W
R214	1-216-679-11	s	METAL, CHIP 15K 0.5% 1/10W
R215	1-216-679-11	s	METAL, CHIP 15K 0.5% 1/10W

NOTE 2:For the # marked in the following parts list, refer to section 7, Changed Parts.

(AD-100 BOARD/DMBK-4012)

Ref. No. or Q'ty	Part No.	SP	Description
R216	1-216-699-11	s	METAL, CHIP 100K 0.5% 1/10W
R217	1-216-660-11	s	METAL, CHIP 2.4K 0.5% 1/10W
R218	1-216-643-11	s	METAL, CHIP 470 0.5% 1/10W
R219	1-216-659-11	s	METAL, CHIP 2.2K 0.5% 1/10W
R220	1-216-643-11	s	METAL, CHIP 470 0.5% 1/10W
R221	1-216-653-11	s	METAL, CHIP 1.2K 0.5% 1/10W
#R222	1-216-650-11	s	METAL, CHIP 910 0.5% 1/10W
R223	1-215-439-00	s	METAL 5.6K 1% 1/6W
R224	1-216-697-11	s	METAL, CHIP 82K 0.5% 1/10W
R225	1-216-694-11	s	METAL, CHIP 62K 0.5% 1/10W
R226	1-216-689-11	s	METAL, CHIP 39K 0.5% 1/10W
R227	1-216-687-11	s	METAL, CHIP 33K 0.5% 1/10W
R228	1-216-688-11	s	METAL, CHIP 36K 0.5% 1/10W
R229	1-216-681-11	s	METAL, CHIP 18K 0.5% 1/10W
R230	1-216-691-11	s	METAL, CHIP 47K 0.5% 1/10W
R231	1-216-651-11	s	METAL, CHIP 1K 0.5% 1/10W
R232	1-216-651-11	s	METAL, CHIP 1K 0.5% 1/10W
R233	1-216-682-11	s	METAL, CHIP 20K 0.5% 1/10W
R234	1-216-682-11	s	METAL, CHIP 20K 0.5% 1/10W
R235	1-215-421-00	s	METAL 1K 1% 1/6W
R236	1-215-493-00	s	METAL 1M 1% 1/6W
R237	1-215-493-00	s	METAL 1M 1% 1/6W
R238	1-215-493-00	s	METAL 1M 1% 1/6W
R301	1-216-671-11	s	METAL, CHIP 6.8K 0.5% 1/10W
R302	1-216-671-11	s	METAL, CHIP 6.8K 0.5% 1/10W
R303	1-216-691-11	s	METAL, CHIP 47K 0.5% 1/10W
R304	1-216-691-11	s	METAL, CHIP 47K 0.5% 1/10W
R305	1-215-445-00	s	METAL 10K 1% 1/6W
R306	1-216-615-11	s	METAL, CHIP 33 0.5% 1/10W
R307	1-216-603-11	s	METAL, CHIP 10 0.5% 1/10W
R308	1-215-433-00	s	METAL 3.3K 1% 1/6W
R309	1-216-699-11	s	METAL, CHIP 100K 0.5% 1/10W
R310	1-215-433-00	s	METAL 3.3K 1% 1/6W
R311	1-218-760-11	s	METAL 220K 0.5% 1/10W
R312	1-215-428-00	s	METAL 2K 1% 1/6W
R313	1-216-699-11	s	METAL, CHIP 100K 0.5% 1/10W
R314	1-216-619-11	s	METAL, CHIP 47 0.5% 1/10W
R315	1-216-699-11	s	METAL, CHIP 100K 0.5% 1/10W
R316	1-216-699-11	s	METAL, CHIP 100K 0.5% 1/10W
R317	1-216-651-11	s	METAL, CHIP 1K 0.5% 1/10W
R318	1-216-675-11	s	METAL, CHIP 10K 0.5% 1/10W
R319	1-216-675-11	s	METAL, CHIP 10K 0.5% 1/10W
R320	1-216-699-11	s	METAL, CHIP 100K 0.5% 1/10W
R321	1-216-699-11	s	METAL, CHIP 100K 0.5% 1/10W
R322	1-216-699-11	s	METAL, CHIP 100K 0.5% 1/10W
#R323	1-215-439-00	s	METAL 5.6K 1% 1/6W
R324	1-216-665-11	s	METAL, CHIP 3.9K 0.5% 1/10W
#R325	1-215-437-00	s	METAL 4.7K 1% 1/6W
R326	1-216-624-11	s	METAL, CHIP 75 0.5% 1/10W
R327	1-214-842-00	s	METAL 120 1% 1/2W
R328	1-214-842-00	s	METAL 120 1% 1/2W
R329	1-216-624-11	s	METAL, CHIP 75 0.5% 1/10W
R330	1-216-699-11	s	METAL, CHIP 100K 0.5% 1/10W
R331	1-216-699-11	s	METAL, CHIP 100K 0.5% 1/10W
R332	1-216-668-11	s	METAL, CHIP 5.1K 0.5% 1/10W
R333	1-216-681-11	s	METAL, CHIP 18K 0.5% 1/10W
R334	1-216-681-11	s	METAL, CHIP 18K 0.5% 1/10W
R335	1-216-699-11	s	METAL, CHIP 100K 0.5% 1/10W
R336	1-216-699-11	s	METAL, CHIP 100K 0.5% 1/10W

NOTE 1:Please see page 6-25 for the parts that are not listd in the parts list.

(AD-100 BOARD/DMBK-4012)

Ref. No. or Q'ty	Part No.	SP	Description
R337	1-215-447-00	s	METAL 12K 1% 1/6W
R338	1-215-445-00	s	METAL 10K 1% 1/6W
R339	1-215-445-00	s	METAL 10K 1% 1/6W
R340	1-215-435-00	s	METAL 3.9K 1% 1/6W
R341	1-215-435-00	s	METAL 3.9K 1% 1/6W
R342	1-215-433-00	s	METAL 3.3K 1% 1/6W
R343	1-216-699-11	s	METAL, CHIP 100K 0.5% 1/10W
R344	1-215-433-00	s	METAL 3.3K 1% 1/6W
R345	1-218-760-11	s	METAL 220K 0.5% 1/10W
R346	1-215-428-00	s	METAL 2K 1% 1/6W
R347	1-216-603-11	s	METAL, CHIP 10 0.5% 1/10W
R348	1-218-776-11	s	METAL 1M 0.5% 1/10W
R349	1-215-455-00	s	METAL 27K 1% 1/6W
R350	1-215-425-00	s	METAL 1.5K 1% 1/6W
R351	1-218-776-11	s	METAL 1M 0.5% 1/10W
R352	1-216-654-11	s	METAL, CHIP 1.3K 0.5% 1/10W
R353	1-216-681-11	s	METAL, CHIP 18K 0.5% 1/10W
R354	1-216-681-11	s	METAL, CHIP 18K 0.5% 1/10W
R355	1-216-699-11	s	METAL, CHIP 100K 0.5% 1/10W
R356	1-216-699-11	s	METAL, CHIP 100K 0.5% 1/10W
R357	1-215-445-00	s	METAL 10K 1% 1/6W
R358	1-215-445-00	s	METAL 10K 1% 1/6W
R359	1-215-435-00	s	METAL 3.9K 1% 1/6W
R360	1-215-435-00	s	METAL 3.9K 1% 1/6W
R361	1-215-428-00	s	METAL 2K 1% 1/6W
R362	1-216-668-11	s	METAL, CHIP 5.1K 0.5% 1/10W
R363	1-216-699-11	s	METAL, CHIP 100K 0.5% 1/10W
R364	1-216-668-11	s	METAL, CHIP 5.1K 0.5% 1/10W
R365	1-216-619-11	s	METAL, CHIP 47 0.5% 1/10W
R366	1-216-699-11	s	METAL, CHIP 100K 0.5% 1/10W
R367	1-216-699-11	s	METAL, CHIP 100K 0.5% 1/10W
R368	1-216-651-11	s	METAL, CHIP 1K 0.5% 1/10W
R369	1-216-699-11	s	METAL, CHIP 100K 0.5% 1/10W
R370	1-218-760-11	s	METAL 220K 0.5% 1/10W
R371	1-216-619-11	s	METAL, CHIP 47 0.5% 1/10W
R372	1-216-699-11	s	METAL, CHIP 100K 0.5% 1/10W
#R373	1-216-675-11	s	METAL, CHIP 10K 0.5% 1/10W
#R374	1-216-675-11	s	METAL, CHIP 10K 0.5% 1/10W
R375	1-216-699-11	s	METAL, CHIP 100K 0.5% 1/10W
R376	1-216-699-11	s	METAL, CHIP 100K 0.5% 1/10W
R377	1-216-619-11	s	METAL, CHIP 47 0.5% 1/10W
R378	1-216-699-11	s	METAL, CHIP 100K 0.5% 1/10W
R379	1-216-699-11	s	METAL, CHIP 100K 0.5% 1/10W
R380	1-216-651-11	s	METAL, CHIP 1K 0.5% 1/10W
R381	1-216-699-11	s	METAL, CHIP 100K 0.5% 1/10W
R383	1-216-675-11	s	METAL, CHIP 10K 0.5% 1/10W
R384	1-216-651-11	s	METAL, CHIP 1K 0.5% 1/10W
R385	1-216-675-11	s	METAL, CHIP 10K 0.5% 1/10W
R386	1-216-651-11	s	METAL, CHIP 1K 0.5% 1/10W
R387	1-216-677-11	s	METAL, CHIP 12K 0.5% 1/10W
R401	1-216-653-11	s	METAL, CHIP 1.2K 0.5% 1/10W
R402	1-216-668-11	s	METAL, CHIP 5.1K 0.5% 1/10W
R403	1-216-651-11	s	METAL, CHIP 1K 0.5% 1/10W
R404	1-216-675-11	s	METAL, CHIP 10K 0.5% 1/10W
R405	1-216-619-11	s	METAL, CHIP 47 0.5% 1/10W
R406	1-216-667-11	s	METAL, CHIP 4.7K 0.5% 1/10W
R407	1-216-675-11	s	METAL, CHIP 10K 0.5% 1/10W
R501	1-216-671-11	s	METAL, CHIP 6.8K 0.5% 1/10W
R502	1-216-671-11	s	METAL, CHIP 6.8K 0.5% 1/10W

NOTE 2:For the # marked in the following parts list, refer to section 7, Changed Parts.

(AD-100 BOARD/DMBK-4012)

Ref. No. or Q'ty	Part No.	SP	Description
R503	1-216-691-11	s	METAL, CHIP 47K 0.5% 1/10W
R504	1-216-691-11	s	METAL, CHIP 47K 0.5% 1/10W
R505	1-215-445-00	s	METAL 10K 1% 1/6W
R506	1-216-615-11	s	METAL, CHIP 33 0.5% 1/10W
R507	1-216-603-11	s	METAL, CHIP 10 0.5% 1/10W
R508	1-215-433-00	s	METAL 3.3K 1% 1/6W
R509	1-216-699-11	s	METAL, CHIP 100K 0.5% 1/10W
R510	1-215-433-00	s	METAL 3.3K 1% 1/6W
R511	1-218-760-11	s	METAL 220K 0.5% 1/10W
R512	1-215-428-00	s	METAL 2K 1% 1/6W
R513	1-216-699-11	s	METAL, CHIP 100K 0.5% 1/10W
R514	1-216-619-11	s	METAL, CHIP 47 0.5% 1/10W
R515	1-216-699-11	s	METAL, CHIP 100K 0.5% 1/10W
R516	1-216-699-11	s	METAL, CHIP 100K 0.5% 1/10W
R517	1-216-651-11	s	METAL, CHIP 1K 0.5% 1/10W
R518	1-216-675-11	s	METAL, CHIP 10K 0.5% 1/10W
R519	1-216-675-11	s	METAL, CHIP 10K 0.5% 1/10W
R520	1-216-699-11	s	METAL, CHIP 100K 0.5% 1/10W
R521	1-216-699-11	s	METAL, CHIP 100K 0.5% 1/10W
R522	1-216-699-11	s	METAL, CHIP 100K 0.5% 1/10W
#R523	1-215-439-00	s	METAL 5.6K 1% 1/6W
R524	1-216-665-11	s	METAL, CHIP 3.9K 0.5% 1/10W
#R525	1-215-437-00	s	METAL 4.7K 1% 1/6W
R526	1-216-624-11	s	METAL, CHIP 75 0.5% 1/10W
R527	1-214-842-00	s	METAL 120 1% 1/2W
R528	1-214-842-00	s	METAL 120 1% 1/2W
R529	1-216-624-11	s	METAL, CHIP 75 0.5% 1/10W
R530	1-216-699-11	s	METAL, CHIP 100K 0.5% 1/10W
R531	1-216-699-11	s	METAL, CHIP 100K 0.5% 1/10W
R532	1-216-668-11	s	METAL, CHIP 5.1K 0.5% 1/10W
R533	1-216-681-11	s	METAL, CHIP 18K 0.5% 1/10W
R534	1-216-681-11	s	METAL, CHIP 18K 0.5% 1/10W
R535	1-216-699-11	s	METAL, CHIP 100K 0.5% 1/10W
R536	1-216-699-11	s	METAL, CHIP 100K 0.5% 1/10W
R537	1-215-447-00	s	METAL 12K 1% 1/6W
R538	1-215-445-00	s	METAL 10K 1% 1/6W
R539	1-215-445-00	s	METAL 10K 1% 1/6W
R540	1-215-435-00	s	METAL 3.9K 1% 1/6W
R541	1-215-435-00	s	METAL 3.9K 1% 1/6W
R542	1-215-433-00	s	METAL 3.3K 1% 1/6W
R543	1-216-699-11	s	METAL, CHIP 100K 0.5% 1/10W
R544	1-215-433-00	s	METAL 3.3K 1% 1/6W
R545	1-218-760-11	s	METAL 220K 0.5% 1/10W
R546	1-215-428-00	s	METAL 2K 1% 1/6W
R547	1-216-603-11	s	METAL, CHIP 10 0.5% 1/10W
R548	1-218-776-11	s	METAL 1M 0.5% 1/10W
R549	1-215-455-00	s	METAL 27K 1% 1/6W
R550	1-215-425-00	s	METAL 1.5K 1% 1/6W
R551	1-218-776-11	s	METAL 1M 0.5% 1/10W
R552	1-216-654-11	s	METAL, CHIP 1.3K 0.5% 1/10W
R553	1-216-681-11	s	METAL, CHIP 18K 0.5% 1/10W
R554	1-216-681-11	s	METAL, CHIP 18K 0.5% 1/10W
R555	1-216-699-11	s	METAL, CHIP 100K 0.5% 1/10W
R556	1-216-699-11	s	METAL, CHIP 100K 0.5% 1/10W
R557	1-215-445-00	s	METAL 10K 1% 1/6W
R558	1-215-445-00	s	METAL 10K 1% 1/6W
R559	1-215-435-00	s	METAL 3.9K 1% 1/6W
R560	1-215-435-00	s	METAL 3.9K 1% 1/6W
R561	1-215-428-00	s	METAL 2K 1% 1/6W

NOTE 1:Please see page 6-25 for the parts that are not listd in the parts list.

(AD-100 BOARD/DMBK-4012)

Ref. No. or Q'ty	Part No.	SP	Description
R562	1-216-668-11	s	METAL, CHIP 5.1K 0.5% 1/10W
R563	1-216-699-11	s	METAL, CHIP 100K 0.5% 1/10W
R564	1-216-668-11	s	METAL, CHIP 5.1K 0.5% 1/10W
R565	1-216-619-11	s	METAL, CHIP 47 0.5% 1/10W
R566	1-216-699-11	s	METAL, CHIP 100K 0.5% 1/10W
R567	1-216-699-11	s	METAL, CHIP 100K 0.5% 1/10W
R568	1-216-651-11	s	METAL, CHIP 1K 0.5% 1/10W
R569	1-216-699-11	s	METAL, CHIP 100K 0.5% 1/10W
R570	1-218-760-11	s	METAL 220K 0.5% 1/10W
R571	1-216-619-11	s	METAL, CHIP 47 0.5% 1/10W
R572	1-216-699-11	s	METAL, CHIP 100K 0.5% 1/10W
#R573	1-216-675-11	s	METAL, CHIP 10K 0.5% 1/10W
#R574	1-216-675-11	s	METAL, CHIP 10K 0.5% 1/10W
R575	1-216-699-11	s	METAL, CHIP 100K 0.5% 1/10W
R576	1-216-699-11	s	METAL, CHIP 100K 0.5% 1/10W
R577	1-216-619-11	s	METAL, CHIP 47 0.5% 1/10W
R578	1-216-699-11	s	METAL, CHIP 100K 0.5% 1/10W
R579	1-216-699-11	s	METAL, CHIP 100K 0.5% 1/10W
R580	1-216-651-11	s	METAL, CHIP 1K 0.5% 1/10W
R581	1-216-699-11	s	METAL, CHIP 100K 0.5% 1/10W
R583	1-216-675-11	s	METAL, CHIP 10K 0.5% 1/10W
R584	1-216-651-11	s	METAL, CHIP 1K 0.5% 1/10W
R585	1-216-675-11	s	METAL, CHIP 10K 0.5% 1/10W
R586	1-216-651-11	s	METAL, CHIP 1K 0.5% 1/10W
R587	1-216-677-11	s	METAL, CHIP 12K 0.5% 1/10W
R601	1-216-675-11	s	METAL, CHIP 10K 0.5% 1/10W
R602	1-216-651-11	s	METAL, CHIP 1K 0.5% 1/10W
R603	1-216-675-11	s	METAL, CHIP 10K 0.5% 1/10W
RB1	1-232-984-11	s	COMPOSITION CIRCUIT BLOCK
RB2	1-233-025-11	s	COMPOSITION CIRCUIT BLOCK
RB401	1-233-093-11	s	COMPOSITION CIRCUIT BLOCK
RB402	1-233-093-11	s	COMPOSITION CIRCUIT BLOCK
RB601	1-235-195-00	s	RESISTOR BLOCK 10KX8
RB602	1-235-195-00	s	RESISTOR BLOCK 10KX8
RB603	1-235-195-00	s	RESISTOR BLOCK 10KX8
RL301	1-515-622-11	s	RELAY
RL302	1-515-622-11	s	RELAY
RL501	1-515-622-11	s	RELAY
RL502	1-515-622-11	s	RELAY
RV101	1-230-749-11	s	RES, ADJ, CERMET 5K
RV102	1-238-801-11	s	RES, ADJ METAL 5K
RV201	1-230-749-11	s	RES, ADJ, CERMET 5K
RV202	1-238-801-11	s	RES, ADJ METAL 5K
RV301	1-230-749-11	s	RES, ADJ, CERMET 5K
RV302	1-230-744-11	s	RES, ADJ, CERMET 100
RV303	1-230-747-11	s	RES, ADJ CERMET 1K
RV304	1-230-750-11	s	RES, ADJ, CERMET 10K
RV305	1-230-747-11	s	RES, ADJ CERMET 1K
RV306	1-230-749-11	s	RES, ADJ, CERMET 5K
RV307	1-230-747-11	s	RES, ADJ CERMET 1K
RV501	1-230-749-11	s	RES, ADJ, CERMET 5K
RV502	1-230-744-11	s	RES, ADJ, CERMET 100
RV503	1-230-747-11	s	RES, ADJ CERMET 1K
RV504	1-230-750-11	s	RES, ADJ, CERMET 10K
RV505	1-230-747-11	s	RES, ADJ CERMET 1K
RV506	1-230-749-11	s	RES, ADJ, CERMET 5K
RV507	1-230-747-11	s	RES, ADJ CERMET 1K

NOTE 2:For the # marked in the following parts list, refer to section 7, Changed Parts.

(AD-100 BOARD/DMBK-4012)

Ref. No. or Q'ty	Part No.	SP	Description
S1	1-570-083-11	s	SWITCH, SLIDE
S2	1-570-083-11	s	SWITCH, SLIDE
SW601	1-554-937-11	s	SWITCH, PUSH
SW602	1-570-623-11	s	SWITCH, DIP 8-CKT
SW603	1-554-080-00	s	SWITCH, DIGITAL
SW604	1-554-080-00	s	SWITCH, DIGITAL
T1	1-437-194-21	s	TRANSFORMER, PULSE
X401	8-749-923-59	s	IC VCO-8003
X601	1-567-865-11	s	CRYSTAL, 12.00MHz

SW-602 BOARD/DMBK-4012

Ref. No. or Q'ty	Part No.	SP	Description
1pc	3-184-241-01	o	FILM, MIC ON
1pc	1-649-759-11	o	PRINTED CIRCUIT BOARD, SW-602
4pcs	4-928-315-01	s	KEY TOP
1pc	4-937-336-51	o	HOLDER, LED
CN1	1-564-974-11	o	CONNECTOR, PS-SF 16P, MALE
D6	8-719-812-31	s	LED TLR123, RED
S1	1-571-656-21	s	SWITCH, TACTIL
S2	1-571-656-21	s	SWITCH, TACTIL
S3	1-571-656-21	s	SWITCH, TACTIL
S4	1-571-656-21	s	SWITCH, TACTIL
S5	1-692-823-11	s	SWITCH, TACTIL

VR-163 BOARD/DMBK-4012

Ref. No. or Q'ty	Part No.	SP	Description
1pc	A-8276-807-A	o	MOUNTED CIRCUIT BOARD, VR-163
2pcs	3-182-957-01	s	WASHER, VOLUME
C10	1-125-447-11	s	DOUBLE LAYERS 1FARAD 5.5V
C19	1-124-903-11	s	ELECT 1uF 20% 50V
C20	1-124-903-11	s	ELECT 1uF 20% 50V
C21	1-124-903-11	s	ELECT 1uF 20% 50V
C101	1-124-903-11	s	ELECT 1uF 20% 50V
C102	1-124-903-11	s	ELECT 1uF 20% 50V
C103	1-124-903-11	s	ELECT 1uF 20% 50V
C104	1-124-903-11	s	ELECT 1uF 20% 50V
C105	1-130-495-00	s	MYLAR 0.1uF 5% 50V
C106	1-130-495-00	s	MYLAR 0.1uF 5% 50V
C107	1-124-903-11	s	ELECT 1uF 20% 50V
C108	1-124-903-11	s	ELECT 1uF 20% 50V
C109	1-124-903-11	s	ELECT 1uF 20% 50V
C110	1-124-903-11	s	ELECT 1uF 20% 50V
C111	1-130-495-00	s	MYLAR 0.1uF 5% 50V
C112	1-130-495-00	s	MYLAR 0.1uF 5% 50V
C113	1-124-903-11	s	ELECT 1uF 20% 50V
C114	1-124-903-11	s	ELECT 1uF 20% 50V
C115	1-124-903-11	s	ELECT 1uF 20% 50V
C116	1-124-903-11	s	ELECT 1uF 20% 50V
C117	1-130-495-00	s	MYLAR 0.1uF 5% 50V
C118	1-130-495-00	s	MYLAR 0.1uF 5% 50V
CN3	1-506-699-11	o	CONNECTOR, LCSC 26P, MALE
CN4	1-560-729-00	o	CONNECTOR, 34P, MALE
D1	8-719-911-19	s	DIODE 1SS119
D2	8-719-911-19	s	DIODE 1SS119
D3	8-719-911-19	s	DIODE 1SS119
D4	8-719-911-19	s	DIODE 1SS119
D10	8-719-987-87	s	DIODE ERA85-009
IC1	8-759-291-30	s	IC TC9130P
IC2	8-759-291-30	s	IC TC9130P
IC3	8-759-291-30	s	IC TC9130P
Q1	8-729-238-32	s	TRANSISTOR 2SC2383-Y
Q2	8-729-238-32	s	TRANSISTOR 2SC2383-Y
R1	1-249-392-11	s	CARBON 8.2 5% 1/4W
R2	1-249-392-11	s	CARBON 8.2 5% 1/4W
R105	1-249-409-11	s	CARBON 220 5% 1/4W
R106	1-249-409-11	s	CARBON 220 5% 1/4W
R107	1-249-409-11	s	CARBON 220 5% 1/4W
R108	1-249-409-11	s	CARBON 220 5% 1/4W
R113	1-260-081-11	s	CARBON 33 5% 1/2W
R114	1-260-081-11	s	CARBON 33 5% 1/2W
#R117	1-249-392-11	s	CARBON 8.2 5% 1/4W
R118	1-215-377-00	s	METAL 15 1% 1/6W
R119	1-215-389-00	s	METAL 47 1% 1/6W
R120	1-215-401-11	s	METAL 150 1% 1/6W
R121	1-215-414-00	s	METAL 510 1% 1/6W
R122	1-215-427-00	s	METAL 1.8K 1% 1/6W
R123	1-249-392-11	s	CARBON 8.2 5% 1/4W
R124	1-215-377-00	s	METAL 15 1% 1/6W
R125	1-215-389-00	s	METAL 47 1% 1/6W
R126	1-215-401-11	s	METAL 150 1% 1/6W
R127	1-215-414-00	s	METAL 510 1% 1/6W
R128	1-215-427-00	s	METAL 1.8K 1% 1/6W

NOTE 1:Please see page 6-25 for the parts that are not listd in the parts list.

NOTE 2:For the # marked in the following parts list, refer to section 7, Changed Parts.

(VR-163 BOARD/DMBK-4012)

Ref. No. or Q'ty	Part No.	SP	Description
R133	1-249-409-11	s	CARBON 220 5% 1/4W
R134	1-249-409-11	s	CARBON 220 5% 1/4W
R135	1-249-409-11	s	CARBON 220 5% 1/4W
R136	1-249-409-11	s	CARBON 220 5% 1/4W
R137	1-249-429-11	S	CARBON 10K 5% 1/4W
R138	1-249-429-11	S	CARBON 10K 5% 1/4W
R139	1-249-429-11	S	CARBON 10K 5% 1/4W
R140	1-249-413-11	s	CARBON 470 5% 1/4W
R141	1-249-413-11	s	CARBON 470 5% 1/4W
R142	1-249-429-11	s	CARBON 10K 5% 1/4W
R143	1-249-429-11	s	CARBON 10K 5% 1/4W
RB101	1-235-195-00	s	RESISTOR BLOCK 10KX8
RB102	1-235-195-00	s	RESISTOR BLOCK 10KX8
#RV1	1-223-614-11	s	RES, VAR, CARBON 10K/10K
#RV2	1-223-614-11	s	RES, VAR, CARBON 10K/10K
#S101	1-692-902-11	s	SWITCH, ROTARY
#S102	1-692-902-11	s	SWITCH, ROTARY

FRAME

Ref. No. or Q'ty	Part No.	SP	Description
DMX-B4008/B4016			
** METER UNIT **			
1pc	1-503-291-00	s	SPEAKER
CN1(SPEAKER)			
	1-509-184-51	s	CONNECTOR, XLR 3P, FEMALE
CN1(METER DIGITAL)			
	1-563-771-11	s	CONNECTOR, D-SUB 15P, FEMALE
DMX-B4008/B4016			
** CONSOLE **			
1pc	1-466-954-11	s	DISPLAY UNIT, EL
1pc	1-692-812-11	s	PANEL, TOUCH
1pc	8-422-940-01	s	DRIVE, FLOPPY DISK MPF420-2/120
1pc	⚠ 1-424-451-11	s	FILTER, NOISE (GL-2060M)
1pc	⚠ 1-413-915-11	s	SWITCHING REG.(TDK.FAW05-20R)
1pc	⚠ 1-413-918-11	s	SWITCHING REG.(TDK.FAW12-2R1)
1pc	⚠ 1-570-117-41	s	SWITCH, ROCKER (AC POWER)
1pc	1-944-634-11	s	HARNESS, SUB (TB MIC)
	This cable includes the following connector.		
	CN101F(to VR-165 board)		
1pc	1-952-707-11	o	HARNESS, SUB (MONITOR)
	This cable includes the following connectors.		
	CN501(to MOA-7 board)		
	CN610(to CN-840 board)		
1pc	1-952-708-11	o	HARNESS, SUB (INCOM)
	This cable includes the following connectors.		
	CN502(to MOA-7 board)		
	CN611(to CN-840 board)		
1pc	1-952-709-11	o	HARNESS, SUB (SURR/MT)
	This cable includes the following connectors.		
	CN503(to MOA-7 board)		
	CN612(to CN-840 board)		
1pc	1-952-710-11	o	HARNESS, SUB (MONI-SW1)
	This cable includes the following connectors.		
	CN510(to MOA-7 board)		
	CN616(to VR-165 board)		
1pc	1-952-711-11	o	HARNESS, SUB (BUS)
	This cable includes the following connectors.		
	CN202(to CPU-145 board)		
	CN401(to IF-413 board)		
1pc	1-952-712-11	o	HARNESS, SUB (FDD)
	This cable includes the following connectors.		
	CN101(to FLOPPY DISK DRIVE)		
	CN206(to CPU-145 board)		
1pc	1-952-713-11	o	HARNESS, SUB (MONI-CTL)
	This cable includes the following connectors.		
	CN408(to IF-413 board)		
	CN511(to MOA-7 board)		
1pc	1-952-714-11	o	HARNESS, SUB (PFL)
	This cable includes the following connectors.		
	CN103(to KY-225 board)		
	CN119(to SW-604 board)		

NOTE 1:Please see page 6-25 for the parts that are not listd in the parts list.

NOTE 2:For the # marked in the following parts list, refer to section 7, Changed Parts.

(FRAME)

Ref. No. or Q'ty	Part No.	SP	Description
1pc	1-952-715-11	o	HARNESS, SUB (MCN-CTL) This cable includes the following connectors. CN104(to KY-225 board) CN121(to SW-605 board)
1pc	1-952-716-11	o	HARNESS, SUB (EL) This cable includes the following connectors. CN5(to EL DISPLAY) CN362(to IF-414 board)
1pc	1-952-717-11	o	HARNESS, SUB (MON1-SW2) This cable includes the following connectors. CN615(to SW-606 board) CN620(to VR-165 board)
1pc	1-952-718-11	o	HARNESS, SUB (MT) This cable includes the following connectors. CN1(to METER UNIT) CN121(to IF-421 bpard)
1pc	1-952-727-13	o	HARNESS (I/O 8) (DMX-B4008 ONLY) This cable includes the following connectors. CN101(to KY-225 board) CN201/204/205(to CPU-145 board) CN331/332/341/361(to IF-414 board) CN402/403/404/405/406/407/409(to IF-413 board) CN601/602/603/604(to CN-838 board) CN605/606/607/608/609(to CN-839 board) CN712A/712B(to AD-100 board) CN802(to CPU-146 board (DMBK-4001)) CN805(to CN-842 board (DMBK-4001)) CN916(to PS-312 board)
1pc	1-953-238-12	o	HARNESS (I/O 16) (DMX-B4016 ONLY) This cable includes the following connectors. CN101A/101B/102(to KY-225 board) CN201/204/205(to CPU-145 board) CN331/332/341/361(to IF-414 board) CN402/403/404/405/406/407/409(to IF-413 board) CN601/602/603/604(to CN-838 board) CN605/606/607/608/609(to CN-839 board) CN712A/712B/712C/712D(to AD-100 board) CN802(to CPU-146 board (DMBK-4001)) CN805(to CN-842 board (DMBK-4001)) CN916(to PS-312 board)
2pcs	⚠ 1-413-919-11	s	SWITCHING REG.(TDK.FAW18-2R8)
3pcs(to AC INLET)			
	⚠ 1-565-788-11	o	HOUSING, 1P
	⚠ 1-565-787-21	o	CONTACT, FASTEN
9pcs	1-241-009-11	s	RES, VAR, SLIDE 10K
CN1(to POWER SUPPLY 1)			
	⚠ 1-750-978-11	o	HOUSING, 24P
	⚠ 1-573-518-11	o	CONTACT, FEMALE AWG18-24
	⚠ 1-573-757-11	o	CONTACT, FEMALE AWG14-16
CN1(to HARNESS, SUB (SP1))			
	1-562-195-11	o	HOUSING, IL-M 2P
	1-566-455-11	o	CONTACT, FEMALE AWG22-28
CN1(GPI 1)			
	1-563-781-21	s	CONNECTOR, D-SUB 50P, FEMALE
CN1(PROCESSOR AUDIO)			
	1-566-321-11	s	CONNECTOR, D-SUB 37P, MALE

(FRAME)

Ref. No. or Q'ty	Part No.	SP	Description
CN1(CONTROL ROOM MONITOR OUT MAIN L)			
	1-568-005-11	s	CONNECTOR, XLR 3P, MALE (FOR J)
	1-568-006-11	s	CONNECTOR, XLR 3P, FEMALE (FOR UC/EK)
CN1(PROCESSOR WORD)			
	1-764-273-11	s	CONNECTOR, BNC, FEMALE
CN2(COMMUNICATION)			
	1-563-773-11	s	CONNECTOR, D-SUB 37P, FEMALE
CN2(to POWER SUPPLY 2)			
	⚠ 1-750-978-11	o	HOUSING, 24P
	⚠ 1-573-518-11	o	CONTACT, FEMALE AWG18-24
	⚠ 1-573-757-21	o	CONTACT, FEMALE AWG14-16
CN2(to HARNESS, SUB (SP2))			
	1-561-514-00	o	HOUSING, ILG 2P
	1-560-372-00	o	CONTACT, FEMALE AWG22-28
CN2(GPI 2)			
	1-563-781-21	s	CONNECTOR, D-SUB 50P, FEMALE
CN2(PROCESSOR DATA)			
	1-566-319-11	o	CONNECTOR, D-SUB 15P, MALE
CN2(CONTROL ROOM MONITOR OUT MAIN R)			
	1-568-005-11	s	CONNECTOR, XLR 3P, MALE (FOR J)
	1-568-006-11	s	CONNECTOR, XLR 3P, FEMALE (FOR UC/EK)
CN3(REMOTE IN)			
	1-563-770-11	s	CONNECTOR, D-SUB 9P, FEMALE
CN3(GPI 3)			
	1-563-772-11	o	CONNECTOR, D-SUB 25P, FEMALE
CN3(CONTROL ROOM MONITOR OUT ALT L)			
	1-568-005-11	s	CONNECTOR, XLR 3P, MALE (FOR J)
	1-568-006-11	s	CONNECTOR, XLR 3P, FEMALE (FOR UC/EK)
CN3(SURROUND MONITOR IN L)			
	1-568-005-11	s	CONNECTOR, XLR 3P, MALE (FOR J)
	1-568-006-11	s	CONNECTOR, XLR 3P, FEMALE (FOR UC/EK)
CN4(REMOTE OUT)			
	1-563-770-11	s	CONNECTOR, D-SUB 9P, FEMALE
CN4(CONTROL ROOM MONITOR OUT ALT R)			
	1-568-005-11	s	CONNECTOR, XLR 3P, MALE (FOR J)
	1-568-006-11	s	CONNECTOR, XLR 3P, FEMALE (FOR UC/EK)
CN4(SURROUND MONITOR IN R)			
	1-568-005-11	s	CONNECTOR, XLR 3P, MALE (FOR J)
	1-568-006-11	s	CONNECTOR, XLR 3P, FEMALE (FOR UC/EK)
CN4(DIGITAL RGB)			
	1-563-770-11	s	CONNECTOR, D-SUB 9P, FEMALE
CN5(KEYBOARD)			
	1-563-770-11	s	CONNECTOR, D-SUB 9P, FEMALE
CN5(PARALLEL REMOTE SCENE)			
	1-563-771-11	s	CONNECTOR, D-SUB 15P, FEMALE
CN5(SURROUND MONITOR IN C)			
	1-568-005-11	s	CONNECTOR, XLR 3P, MALE (FOR J)
	1-568-006-11	s	CONNECTOR, XLR 3P, FEMALE (FOR UC/EK)
CN6(METER DIGITAL)			
	1-563-771-11	s	CONNECTOR, D-SUB 15P, FEMALE

(FRAME)

Ref. No. or Q'ty	Part No.	SP	Description
CN6(SURROUND MONITOR IN S)			
	1-568-005-11	s	CONNECTOR, XLR 3P, MALE (FOR J)
	1-568-006-11	s	CONNECTOR, XLR 3P, FEMALE (FOR UC/EK)
CN6(PARALLEL REMOTE MUTE)			
	1-563-781-21	s	CONNECTOR, D-SUB 50P, FEMALE
CN7(PARALLEL REMOTE FADER)			
	1-563-781-21	s	CONNECTOR, D-SUB 50P, FEMALE
CN7(METER ANALOG)			
	1-563-770-11	s	CONNECTOR, D-SUB 9P, FEMALE
CN7(STUDIO MONITOR OUT SP L)			
	1-568-005-11	s	CONNECTOR, XLR 3P, MALE (FOR J)
	1-568-006-11	s	CONNECTOR, XLR 3P, FEMALE (FOR UC/EK)
CN8(STUDIO MONITOR OUT SP R)			
	1-568-005-11	s	CONNECTOR, XLR 3P, MALE (FOR J)
	1-568-006-11	s	CONNECTOR, XLR 3P, FEMALE (FOR UC/EK)
CN9(STUDIO MONITOR OUT HP L)			
	1-568-005-11	s	CONNECTOR, XLR 3P, MALE (FOR J)
	1-568-006-11	s	CONNECTOR, XLR 3P, FEMALE (FOR UC/EK)
CN10(STUDIO MONITOR OUT HP R)			
	1-568-005-11	s	CONNECTOR, XLR 3P, MALE (FOR J)
	1-568-006-11	s	CONNECTOR, XLR 3P, FEMALE (FOR UC/EK)
CN111(to SW-604 board)			
	1-569-196-11	o	HOUSING, 3P
	1-569-191-11	o	CONTACT, FEMALE AWG22-26
CN112(to SW-604 board)			
	1-569-196-11	o	HOUSING, 3P
	1-569-191-11	o	CONTACT, FEMALE AWG22-26
CN113(to SW-604 board)			
	1-569-196-11	o	HOUSING, 3P
	1-569-191-11	o	CONTACT, FEMALE AWG22-26
CN114(to SW-604 board)			
	1-569-196-11	o	HOUSING, 3P
	1-569-191-11	o	CONTACT, FEMALE AWG22-26
CN115(to SW-604 board)			
	1-569-196-11	o	HOUSING, 3P
	1-569-191-11	o	CONTACT, FEMALE AWG22-26
CN116(to SW-604 board)			
	1-569-196-11	o	HOUSING, 3P
	1-569-191-11	o	CONTACT, FEMALE AWG22-26
CN117(to SW-604 board)			
	1-569-196-11	o	HOUSING, 3P
	1-569-191-11	o	CONTACT, FEMALE AWG22-26
CN118(to SW-604 board)			
	1-569-196-11	o	HOUSING, 3P
	1-569-191-11	o	CONTACT, FEMALE AWG22-26
CN342(to IF-414 board)			
	1-569-196-11	o	HOUSING, 3P
	1-569-191-11	o	CONTACT, FEMALE AWG22-26
CN617(to VR-165 board)			
	1-569-196-11	o	HOUSING, 3P
	1-569-191-11	o	CONTACT, FEMALE AWG22-26

(FRAME)

Ref. No. or Q'ty	Part No.	SP	Description
CN951(to POWER SUPPLY)			
	⚠ 1-691-186-11	o	HOUSING, 24P
	⚠ 1-573-518-11	o	CONTACT, FEMALE AWG18-24
	⚠ 1-535-321-11	o	CONTACT, FEMALE AWG22-28
DMX-B4008			
** PROCESSOR **			
1pc	⚠ 1-413-955-11	s	SWITCHING REG.(TDK.MRW-171-1)
1pc	⚠ 1-424-451-11	s	FILTER, NOISE (GL-2060M)
1pc	1-541-891-11	s	MOTOR, DC FAN (WITH FG)
1pc	⚠ 1-570-117-41	s	SWITCH, ROCKER (AC POWER)
1pc(DC IN)			
	1-562-160-00	s	CONNECTOR, 12P, FEMALE
CN2(INS IN)			
	1-568-006-11	s	CONNECTOR, XLR 3P, FEMALE
CN2(INPUT 1/2)			
	1-568-006-11	s	CONNECTOR, XLR 3P, FEMALE
CN2(INPUT 17/18)			
	1-568-006-11	s	CONNECTOR, XLR 3P, FEMALE
CN2(PGM L/R 1)			
	1-568-005-11	s	CONNECTOR, XLR 3P, MALE
CN2(AUX 1)			
	1-568-005-11	s	CONNECTOR, XLR 3P, MALE
CN3(INPUT 3/4)			
	1-568-006-11	s	CONNECTOR, XLR 3P, FEMALE
CN3(INPUT 19/20)			
	1-568-006-11	s	CONNECTOR, XLR 3P, FEMALE
CN3(INS OUT)			
	1-568-005-11	s	CONNECTOR, XLR 3P, MALE
CN3(PGM L/R 2)			
	1-568-005-11	s	CONNECTOR, XLR 3P, MALE
CN3(AUX 2)			
	1-568-005-11	s	CONNECTOR, XLR 3P, MALE
CN4(INPUT 5/6)			
	1-568-006-11	s	CONNECTOR, XLR 3P, FEMALE
CN4(INPUT 21/22)			
	1-568-006-11	s	CONNECTOR, XLR 3P, FEMALE
CN4(PGM L/R 3)			
	1-568-005-11	s	CONNECTOR, XLR 3P, MALE
CN4(PFL)			
	1-568-005-11	s	CONNECTOR, XLR 3P, MALE
CN5(CONSOLE AUDIO)			
	1-563-773-11	s	CONNECTOR, D-SUB 37P, FEMALE
CN5(INPUT 7/8)			
	1-568-006-11	s	CONNECTOR, XLR 3P, FEMALE
CN5(INPUT 23/24)			
	1-568-006-11	s	CONNECTOR, XLR 3P, FEMALE
CN5(PGM L/R 4)			
	1-568-005-11	s	CONNECTOR, XLR 3P, MALE

(FRAME)

Ref. No. or Q'ty	Part No.	SP	Description
CN6(INPUT 9/10)			
	1-568-006-11	s	CONNECTOR, XLR 3P, FEMALE
CN6(INPUT 25/26)			
	1-568-006-11	s	CONNECTOR, XLR 3P, FEMALE
CN6(REF VIDEO INPUT)			
	1-764-273-11	s	CONNECTOR, BNC, FEMALE
CN6(PGM L/R 5)			
	1-568-005-11	s	CONNECTOR, XLR 3P, MALE
CN7(INPUT 11/12)			
	1-568-006-11	s	CONNECTOR, XLR 3P, FEMALE
CN7(INPUT 27/28)			
	1-568-006-11	s	CONNECTOR, XLR 3P, FEMALE
CN7(REF VIDEO INPUT)			
	1-764-273-11	s	CONNECTOR, BNC, FEMALE
CN7(PGM L/R 6)			
	1-568-005-11	s	CONNECTOR, XLR 3P, MALE
CN8(INPUT 13/14)			
	1-568-006-11	s	CONNECTOR, XLR 3P, FEMALE
CN8(INPUT 29/30)			
	1-568-006-11	s	CONNECTOR, XLR 3P, FEMALE
CN8(REF WORD IN)			
	1-764-273-11	s	CONNECTOR, BNC, FEMALE
CN8(PGM L/R 7)			
	1-568-005-11	s	CONNECTOR, XLR 3P, MALE
CN9(INPUT 15/16)			
	1-568-006-11	s	CONNECTOR, XLR 3P, FEMALE
CN9(INPUT 31/32)			
	1-568-006-11	s	CONNECTOR, XLR 3P, FEMALE
CN9(REF WORD OUT)			
	1-764-273-11	s	CONNECTOR, BNC, FEMALE
CN9(PGM L/R 8)			
	1-568-005-11	s	CONNECTOR, XLR 3P, MALE
CN10(to MB-481 board)			
	1-561-515-12	o	HOUSING, ILG 3P
	1-506-740-11	o	CONTACT, ILG, FEMALE AWG22-28
CN10(CONSOLE)			
	1-563-771-11	s	CONNECTOR, D-SUB 15P, FEMALE
CN11(RS-232C)			
	1-563-772-11	s	CONNECTOR, D-SUB 25P, FEMALE
CN12(REF WORD OUT)			
	1-764-273-11	s	CONNECTOR, BNC, FEMALE
CNE/L/N(to AC INLET)			
⚠	1-565-788-11	o	HOUSING, 1P
⚠	1-565-787-11	o	CONTACT, FASTEN
CNA(to POWER SUPPLY)			
⚠	1-691-940-11	o	HOUSING, 16P
⚠	1-573-518-11	o	CONTACT, FEMALE AWG18-24

(FRAME)

Ref. No. or Q'ty	Part No.	SP	Description
CNB(to POWER SUPPLY)			
⚠	1-691-941-11	o	HOUSING, 16P
⚠	1-573-518-11	o	CONTACT, FEMALE AWG18-24
CP1(to SWITHING REGULATOR)			
⚠	1-565-788-11	o	HOUSING, 1P
⚠	1-565-787 11	o	CONTACT, FASTEN
CP2(to SWITCHING REGULATOR)			
⚠	1-750-171-11	s	CONNECTOR, 2P
⚠	1-569-595-11	s	CONTACT, FEMALE AWG18-24
DMX-B4016			
** PROCESSOR **			
1pc ⚠	1-413-956-11	s	SWITCHING REG.(TDK.FAW05-30R)
1pc ⚠	1-570-384-11	s	SWITCH ROCKER (AC POWER)
2pcs ⚠	1-413-919-11	s	SWITCHING REG.(TDK.FAW18-2R8)
2pcs ⚠	1-424-451-11	s	FILTER, NOISE (GL-2060M)
3pcs	1-541-891-11	s	MOTOR, DC FAN (WITH FG)
28pcs ⚠	1-535-321-11	s	CONTACT, FEMALE AWG22-28
CN2(RS-232C)			
	1-563-772-11	s	CONNECTOR, D-SUB 25P, FEMALE
CN2(CONSOLE AUDIO)			
	1-563-773-11	s	CONNECTIR, D-SUB 37P, FEMALE
CN2(GROUP OUT 1)			
	1-568-005-11	s	CONNECTOR, XLR 3P, MALE
CN2(INPUT ST1)			
	1-568-006-11	s	CONNECTOR, XLR 3P, FEMALE
CN2(ON AIR)			
	1-568-006-11	s	CONNECTOR, XLR 3P, FEMALE
CN2(INPUT ST17)			
	1-568-006-11	s	CONNECTOR, XLR 3P, FEMALE
CN2(MONITOR INPUT ON AIR)			
	1-568-006-11	s	CONNECTOR, XLR 3P, FEMALE
CN3(CONSOLE DATA)			
	1-563-771-11	s	CONNECTOR, D-SUB 15P, FEMALE
CN3(GROUP OUT 2)			
	1-568-005-11	s	CONNECTOR, XLR 3P, MALE
CN3(INPUT ST2)			
	1-568-006-11	s	CONNECTOR, XLR 3P, FEMALE
CN3(INPUT ST18)			
	1-568-006-11	s	CONNECTOR, XLR 3P, FEMALE
CN3(MONITOR INPUT 1)			
	1-568-006-11	s	CONNECTOR, XLR 3P, FEMALE
CN3(ANALOG OUT L)			
	1-568-005-11	s	CONNECTOR, XLR 3P, MALE(FOR UC/EK)
	1-568-006-11	s	CONNECTOR, XLR 3P, FEMALE(FOR J)
CN4(REMOTE IN)			
	1-563-770-11	s	CONNECTOR, D-SUB 9P, FEMALE
CN4(GROUP OUT 3)			
	1-568-005-11	s	CONNECTOR, XLR 3P, MALE
CN4(INPUT ST3)			
	1-568-006-11	s	CONNECTOR, XLR 3P, FEMALE

(FRAME)

Ref. No. or Q'ty	Part No.	SP	Description
CN4(INPUT ST19)			
	1-568-006-11	s	CONNECTOR, XLR 3P, FEMALE
CN4(MONITOR INPUT 2)			
	1-568-006-11	s	CONNECTOR, XLR 3P, FEMALE
CN4(ANALOG OUT R)			
	1-568-005-11	s	CONNECTOR, XLR 3P, MALE(FOR UC/EK)
	1-568-006-11	s	CONNECTOR, XLR 3P, FRMALE(FOR J)
CN5(REMOTE OUT)			
	1-563-770-11	s	CONNECTOR, D-SUB 9P, FEMALE
CN5(GROUP OUT 4)			
	1-568-005-11	s	CONNECTOR, XLR 3P, MALE
CN5(INPUT ST4)			
	1-568-006-11	s	CONNECTOR, XLR 3P, FEMALE
CN5(INPUT ST20)			
	1-568-006-11	s	CONNECTOR, XLR 3P, FEMALE
CN5(MONITOR INPUT 3)			
	1-568-006-11	s	CONNECTOR, XLR 3P, FEMALE
CN6(GROUP OUT 5)			
	1-568-005-11	s	CONNECTOR, XLR 3P, MALE
CN6(INPUT ST5)			
	1-568-006-11	s	CONNECTOR, XLR 3P, FEMALE
CN6(INPUT ST21)			
	1-568-006-11	s	CONNECTOR, XLR 3P, FEMALE
CN6(MONITOR INPUT 4)			
	1-568-006-11	s	CONNECTOR, XLR 3P, FEMALE
CN7(GROUP OUT 6)			
	1-568-005-11	s	CONNECTOR, XLR 3P, MALE
CN7(INPUT ST6)			
	1-568-006-11	s	CONNECTOR, XLR 3P, FEMALE
CN7(INPUT ST22)			
	1-568-006-11	s	CONNECTOR, XLR 3P, FEMALE
CN7(REF WORD OUT2)			
	1-764-273-11	s	CONNECTOR, BNC, FRMALE
CN8(GROUP OUT 7)			
	1-568-005-11	s	CONNECTOR, XLR 3P, MALE
CN8(INPUT ST7)			
	1-568-006-11	s	CONNECTOR, XLR 3P, FEMALE
CN8(INPUT ST23)			
	1-568-006-11	s	CONNECTOR, XLR 3P, FEMALE
CN8(REF WORD OUT1)			
	1-764-273-11	s	CONNECTOR, BNC, FRMALE
CN9(GROUP OUT 8)			
	1-568-005-11	s	CONNECTOR, XLR 3P, MALE
CN9(INPUT ST8)			
	1-568-006-11	s	CONNECTOR, XLR 3P, FEMALE
CN9(INPUT ST24)			
	1-568-006-11	s	CONNECTOR, XLR 3P, FEMALE

(FRAME)

Ref. No. or Q'ty	Part No.	SP	Description
CN9(INSERT RTN1)			
	1-568-006-11	s	CONNECTOR, XLR 3P, FEMALE
CN9(REF WORD IN)			
	1-764-273-11	s	CONNECTOR, BNC, FRMALE
CN10(DUBBING OUT 1)			
	1-568-005-11	s	CONNECTOR, XLR 3P, MALE
CN10(INPUT ST9)			
	1-568-006-11	s	CONNECTOR, XLR 3P, FEMALE
CN10(INPUT ST25)			
	1-568-006-11	s	CONNECTOR, XLR 3P, FEMALE
CN10(INSERT RTN2)			
	1-568-006-11	s	CONNECTOR, XLR 3P, FEMALE
CN10(REF VIDEO IN)			
	1-764-273-11	s	CONNECTOR, BNC, FRMALE
CN11(INSERT SND1)			
	1-568-005-11	s	CONNECTOR, XLR 3P, MALE
CN11(DUBBING OUT 2)			
	1-568-005-11	s	CONNECTOR, XLR 3P, MALE
CN11(INPUT ST10)			
	1-568-006-11	s	CONNECTOR, XLR 3P, FEMALE
CN11(INPUT ST26)			
	1-568-006-11	s	CONNECTOR, XLR 3P, FEMALE
CN11(REF VIDEO IN)			
	1-764-273-11	s	CONNECTOR, BNC, FRMALE
CN12(INSERT SND2)			
	1-568-005-11	s	CONNECTOR, XLR 3P, MALE
CN12(DUBBING OUT 3)			
	1-568-005-11	s	CONNECTOR, XLR 3P, MALE
CN12(INPUT ST11)			
	1-568-006-11	s	CONNECTOR, XLR 3P, FEMALE
CN12(INPUT ST27)			
	1-568-006-11	s	CONNECTOR, XLR 3P, FEMALE
CN13(OUTPUT PGM)			
	1-568-005-11	s	CONNECTOR, XLR 3P, MALE
CN13(DUBBING OUT 4)			
	1-568-005-11	s	CONNECTOR, XLR 3P, MALE
CN13(INPUT ST12)			
	1-568-006-11	s	CONNECTOR, XLR 3P, FEMALE
CN13(INPUT ST28)			
	1-568-006-11	s	CONNECTOR, XLR 3P, FEMALE
CN14(OUTPUT PGM)			
	1-568-005-11	s	CONNECTOR, XLR 3P, MALE
CN14(DUBBING OUT 5)			
	1-568-005-11	s	CONNECTOR, XLR 3P, MALE
CN14(INPUT ST13)			
	1-568-006-11	s	CONNECTOR, XLR 3P, FEMALE

(FRAME)

Ref. No. or Q'ty	Part No.	SP	Description
CN14(INPUT ST29)			
	1-568-006-11	s	CONNECTOR, XLR 3P, FEMALE
CN15(OUTPUT AUX1)			
	1-568-005-11	s	CONNECTOR, XLR 3P, MALE
CN15(DUBBING OUT 6)			
	1-568-005-11	s	CONNECTOR, XLR 3P, MALE
CN15(INPUT ST14)			
	1-568-006-11	s	CONNECTOR, XLR 3P, FEMALE
CN15(INPUT 5ST30)			
	1-568-006-11	s	CONNECTOR, XLR 3P, FEMALE
CN16(OUTPUT AUX2)			
	1-568-005-11	s	CONNECTOR, XLR 3P, MALE
CN16(DUBBING OUT 7)			
	1-568-005-11	s	CONNECTOR, XLR 3P, MALE
CN16(INPUT ST15)			
	1-568-006-11	s	CONNECTOR, XLR 3P, FEMALE
CN17(OUTPUT PFL)			
	1-568-005-11	s	CONNECTOR, XLR 3P, MALE
CN17(DUBBING OUT 8)			
	1-568-005-11	s	CONNECTOR, XLR 3P, MALE
CN17(INPUT ST16)			
	1-568-006-11	s	CONNECTOR, XLR 3P, FEMALE
CN17(ID/TB)			
	1-568-006-11	s	CONNECTOR, XLR 3P, FEMALE
CNA(to POWER SUPPLY)			
⚠	1-691-940-11	o	HOUSING, 16P
⚠	1-573-518-11	o	CONTACT, FEMALE AWG18-24
CNB(to POWER SUPPLY)			
⚠	1-691-941-11	o	HOUSING, 16P
⚠	1-573-518-11	o	CONTACT, FEMALE AWG18-24
CNE/L/N(to AC INLET)			
⚠	1-565-788-11	o	HOUSING, 1P
⚠	1-565-787-11	o	CONTACT, FASTEN

(FRAME)

Ref. No. or Q'ty	Part No.	SP	Description
DMBK-4001(OPTION)			
1pc	1-466-955-11	s	ROTARY ENCODER
CN1(SONY 9PIN REMOTE 1)			
	1-563-770-11	s	CONNECTOR, D-SUB 9P, FEMALE
CN2(SONY 9PIN REMOTE 2)			
	1-563-770-11	s	CONNECTOR, D-SUB 9P, FEMALE
CN3(SONY 9PIN REMOTE 3)			
	1-563-770-11	s	CONNECTOR, D-SUB 9P, FEMALE
CN4(SONY 9PIN REMOTE 4)			
	1-563-770-11	s	CONNECTOR, D-SUB 9P, FEMALE
CN5(SONY 9PIN REMOTE 5)			
	1-563-770-11	s	CONNECTOR, D-SUB 9P, FEMALE
CN6(SONY 9PIN REMOTE 6)			
	1-563-770-11	s	CONNECTOR, D-SUB 9P, FEMALE
CN7(PARALLEL REMOTE 7)			
	1-563-771-11	s	CONNECTOR, D-SUB 15P, FEMALE
DMBK-4003(OPTION)			
1pc	1-520-516-11	s	VU METER
CN1(METER ANALOG)			
	1-566-718-21	s	CONNECTOR, D-SUB 9P, MALE
DMBK-4007(OPTION)			
1pc	⚠ 1-413-955-11	s	SWITCHING REG. (TDK.MRW-171-1)
1pc	⚠ 1-570-384-11	s	SWITCH, ROCKER (AC POWER)
1pc	⚠ 1-424-451-11	s	FILTER, NOISE (GL-2060M)
1pc(DC IN)			
	1-562-160-00	s	CONNECTOR, 12P, FEMALE
CN1(to SWITCHING REGULATOR)			
⚠	1-750-171-11	s	CONNECTOR, 2P
⚠	1-569-595-11	s	CONTACT, FEMALE AWG18-24
CNE/L/N(to AC INLET)			
⚠	1-565-788-11	o	HOUSING, 1P
⚠	1-565-787-11	o	CONTACT, FASTEN

(FRAME)

Ref. No. or Q'ty	Part No.	SP	Description
DMBK-4008(OPTION)			
1pc	⚠ 1-413-956-11	s	SWITCHING REG. (TDK.FAW05-30R)
1pc	⚠ 1-570-384-11	s	SWITCH, ROCKER (AC POWER)
2pcs	⚠ 1-413-919-11	s	SWITCHING REG. (TDK.FAW18-2R8)
28pcs	⚠ 1-535-321-11	s	CONTACT, FEMALE AWG22-28
CNA(to POWER SUPPLY)			
	⚠ 1-691-940-11	o	HOUSING, 16P
	⚠ 1-573-518-11	o	CONTACT, FEMALE AWG18-24
DMBK-4009(OPTION)			
1pc	⚠ 1-413-915-11	s	SWITCHING REG. (TDK.FAW05-20R)
1pc	⚠ 1-413-918-11	s	SWITCHING REG. (TDK.FAW12-2R1)
1pc	⚠ 1-424-451-11	s	FILTER, NOISE (GL-2060M)
2pcs	⚠ 1-413-919-11	s	SWITCHING REG. (TDK.FAW18-2R8)
3pcs(to AC INLET)			
	⚠ 1-565-788-11	o	HOUSING, 1P
	⚠ 1-565-787-11	o	CONTACT, FASTEN
CN1(to POWER SUPPLY 2)			
	⚠ 1-691-186-11	o	HOUSING, 24P
	⚠ 1-573-518-11	o	CONTACT, FEMALE AWG18-24
	⚠ 1-535-321-11	o	CONTACT, FEMALE AWG18-24

(FRAME)

Ref. No. or Q'ty	Part No.	SP	Description
DMBK-4010(OPTION)			
1pc	1-952-714-11	o	HARNESS, SUB (PFL)
	This cable includes the following connectors.		
	CN103(to KY-225 board)		
	CN119(to SW-604 board)		
1pc	1-952-715-11	o	HARNESS, SUB (MCN-CTL)
	This cable includes the following connectors.		
	CN104(to KY-225 board)		
	CN121(to SW-605 board)		
8pcs	1-241-009-11	s	RES, VAR 10K
CN111(to SW-604 board)			
	1-569-196-11	o	HOUSING 3P
	1-569-191-11	o	CONTACT, FEMALE AWG22-26
CN112(to SW-604 board)			
	1-569-196-11	o	HOUSING 3P
	1-569-191-11	o	CONTACT, FEMALE AWG22-26
CN113(to SW-604 board)			
	1-569-196-11	o	HOUSING 3P
	1-569-191-11	o	CONTACT, FEMALE AWG22-26
CN114(to SW-604 board)			
	1-569-196-11	o	HOUSING 3P
	1-569-191-11	o	CONTACT, FEMALE AWG22-26
CN115(to SW-604 board)			
	1-569-196-11	o	HOUSING 3P
	1-569-191-11	o	CONTACT, FEMALE AWG22-26
CN116(to SW-604 board)			
	1-569-196-11	o	HOUSING 3P
	1-569-191-11	o	CONTACT, FEMALE AWG22-26
CN117(to SW-604 board)			
	1-569-196-11	o	HOUSING 3P
	1-569-191-11	o	CONTACT, FEMALE AWG22-26
CN118(to SW-604 board)			
	1-569-196-11	o	HOUSING 3P
	1-569-191-11	o	CONTACT, FEMALE AWG22-26

(FRAME)

Ref. No. or Q'ty	Part No.	SP	Description
DMBK-4012(OPTION)			
CN701(ANALOG IN 1 IN)			
	1-568-006-11	s	CONNECTOR, XLR 3P, FEMALE
CN702(ANALOG IN LINE)			
	1-568-006-11	s	CONNECTOR, XLR 3P, FEMALE
CN703(DIGITAL OUT)			
	1-568-005-11	s	CONNECTOR, XLR 3P, MALE
CN704(ANALOG IN 1 MIC)			
	1-568-006-11	s	CONNECTOR, XLR 3P, FEMALE
CN705(ANALOG IN 2 IN)			
	1-568-006-11	s	CONNECTOR, XLR 3P, FEMALE
CN706(ANALOG IN 2 LINE)			
	1-568-006-11	s	CONNECTOR, XLR 3P, FEMALE
CN707(ANALOG IN 1 OUT)			
	1-568-005-11	s	CONNECTOR, XLR 3P, MALE
CN708(ANALOG IN 2 MIC)			
	1-568-006-11	s	CONNECTOR, XLR 3P, FEMALE
CN709(ANALOG IN 2 OUT)			
	1-568-005-11	s	CONNECTOR, XLR 3P, MALE
CN710(MIC REMOTE)			
	1-563-771-11	s	CONNECTOR, D-SUB 15P, FEMALE

6-4. SUPPLIED ACCESSORIES

DMX-B4008

Ref. No. or Q'ty	Part No.	SP	Description
1pc	1-551-475-71	s	CABLE ASSY, 10m
1pc	1-557-714-11	s	CORD, CONNECTION, 1m
1pc	1-695-542-11	o	RESISTOR,CONNECTOR TERMINATION
1pc	1-751-756-11	s	CORD, CONNECTION (8CH MULTI), 10m
1pc	1-751-760-11	s	CORD, CONNECTION (HDLC), 1m
1pc	1-751-761-11	s	CORD, CONNECTION (HDLC), 10m
2pcs	⚠ 1-557-161-11	s	COAD, POWER (FOR J)
2pcs	⚠ 1-557-377-11	s	CORD, POWER (FOR UC)
2pcs	⚠ 1-590-910-11	s	COAD, POWER (FOR EK)
2pcs	2-990-242-01	s	HOLDER (B), PLUG

DMX-B4016

Ref. No. or Q'ty	Part No.	SP	Description
1pc	1-551-475-71	s	CABLE ASSY, 10m
1pc	1-557-714-11	s	CORD, CONNECTION, 1m
1pc	1-695-542-11	o	RESISTOR,CONNECTOR TERMINATION
1pc	1-751-756-11	s	CORD, CONNECTION (8CH MULTI), 10m
1pc	1-751-760-11	s	CORD, CONNECTION (HDLC), 1m
1pc	1-751-761-11	s	CORD, CONNECTION (HDLC), 10m
2pcs	⚠ 1-557-161-11	s	COAD, POWER (FOR J)
2pcs	⚠ 1-557-377-11	s	CORD, POWER (FOR UC)
2pcs	⚠ 1-590-910-11	s	COAD, POWER (FOR EK)
2pcs	2-990-242-01	s	HOLDER (B), PLUG

DMBK-4001 (OPTION)

Ref. No. or Q'ty	Part No.	SP	Description
1pc	1-953-228-11	o	HARNESS, SUB (RM)
2pcs	7-682-903-01	s	SCREW +PWH 3x5
4pcs	7-682-547-09	s	SCREW +B 3x6

DMBK-4002 (OPTION)

Ref. No. or Q'ty	Part No.	SP	Description
2pcs	3-183-529-02	o	PLATE, BLIND
4pcs	2-388-223-01	s	NUT, HEXAGON
4pcs	3-184-614-01	s	SPRING SPACER, DIA.10
4pcs	4-701-102-21	s	BOLT(M10x100), HEXAGON SOCKET
4pcs	7-682-561-09	s	SCREW +B 4X8
8pcs	2-388-224-01	s	WASHER, FLAT
16pcs	7-682-662-09	s	SCREW +PS 4X10

DMBK-4003 (OPTION)

Ref. No. or Q'ty	Part No.	SP	Description
1pc	1-765-280-11	s	COAD, CONNECTION, 1m

DMBK-4004 (OPTION)

Ref. No. or Q'ty	Part No.	SP	Description
1pc	X-3167-357-1	o	PAD (CH) ASSY
2pcs	3-184-415-01	o	ARM, REINFORCEMENT
3pcs	7-682-547-09	s	SCREW +B 3x6
24pcs	7-682-562-09	s	SCREW +B 4x10
25pcs	7-682-903-01	s	SCREW +PWH 3x5

(SUPPLIED ACCESSORIES)

Ref. No. or Q'ty	Part No.	SP	Description

DMBK-4005 (OPTION)

26pcs	7-682-903-01	s	SCREW +PWH 3X5

DMBK-4006 (OPTION)

1pc	X-3167-354-1	o	SLEEVE (R) ASSY
1pc	X-3167-355-1	o	SLEEVE (L) ASSY
1pc	X-3167-356-1	o	PAD (MAS) ASSY
1pc	X-3167-357-1	o	PAD (CH) ASSY
4pcs	7-682-568-09	s	SCREW +B 4x30
7pcs	7-688-004-11	s	WASHER W4, MIDDLE
47pcs	7-682-547-09	s	SCREW +B 3x6

DMBK-4007 (OPTION)

1pc	⚠ 1-534-754-11	s	POWER CORD (FOR J)
1pc	⚠ 1-557-377-11	s	POWER CORD (FOR UC)
1pc	⚠ 1-590-910-11	s	POWER CORD (FOR EK)
1pc	1-765-409-11	s	COAD, CONNECTION DC, 0.7m
1pc	2-990-242-01	s	HOLDER(B), PLUG
4pcs	7-682-903-01	s	SCREW +PWH 3x5

DMBK-4008 (OPTION)

1pc	⚠ 1-557-161-00	s	POWER CORD (FOR J)
1pc	⚠ 1-557-377-11	s	POWER CORD (FOR UC)
1pc	⚠ 1-590-910-11	s	POWER CORD (FOR EK)
1pc	2-990-242-01	s	HOLDER (B), PLUG
4pcs	7-682-903-01	s	SCREW +PWH 3x5

DMBK-4009 (OPTION)

1pc	⚠ 1-534-754-00	s	POWER CORD (FOR J)
1pc	⚠ 1-557-377-11	s	POWER CORD (FOR UC)
1pc	⚠ 1-590-910-11	s	POWER CORD (FOR EK)
1pc	2-990-242-01	s	HOLDER (B), PLUG
4pcs	7-682-547-09	s	SCREW +B 3x6

DMBK-4010 (OPTION)

1pc	X-3167-357-1	o	PAD (CH) ASSY
1pc	1-953-230-11	o	HARNESS, SUB (CH-ADD)
22pcs	7-682-903-01	s	SCREW +PWH 3x5
24pcs	7-682-562-09	s	SCREW +B 4x10

6-5. OPTIONAL FIXTURE

Part No.	SP	Description
J-6400-050-A	o	EXTENSION BOARD, EX-360 (FOR DMX-B4008)
J-6401-160-A	o	POWER SUPPLY EXTENDER (FOR DMX-B4008 PROCESSOR)
J-6401-170-A	o	POWER SUPPLY EXTENDER (FOR CONSOLE)
J-6401-180-A	o	CONVERSION CABLE, Dsub-XLR
J-6401-190-A	o	EXTENSION BOARD, EX-455 (FOR DMX-B4016)

SECTION 7
CHANGED PARTS

NOTE: The numbers identified by making with) are matching with each serial numbers.
See the table matched with each serial numbers at the end of this section.

(FOR DMX-B4008 UC)
307) Serial No. 10001 and higher.
310) Serial No. 10003 and higher.

(FOR DMX-B4008 J)
307) Serial No. 20001 and higher.
310) Serial No. 20003 and higher.
311) Serial No. 20004 and higher.

(FOR DMX-B4008 EK)
307) Serial No. 30001 and higher.
309) Serial No. 30007 and higher.
310) Serial No. 30010 and higher.
311) Serial No. 30013 and higher.

CPU-145 BOARD
---

307)	RB101	1-235-337-11 s RESISTOR BLOCK 22Kx8
311)	RB101	1-253-194-00 s RESISTOR BLOCK 4.7Kx8

IF-414 BOARD
---

307)	RB101	1-235-337-11 s RESISTOR BLOCK 22Kx8
311)	RB101	1-253-194-00 s RESISTOR BLOCK 4.7Kx8

MOA-7A/B BOARD
---

307)	C826	NOT IN USE.
309)	C826	1-161-485-00 s CERAMIC 0.1uF 50V
307)	R113	1-215-456-00 s METAL 30K 1% 1/6W
309)	R113	1-215-452-00 s METAL 20K 1% 1/6W
307)	R114	1-215-456-00 s METAL 30K 1% 1/6W
309)	R114	1-215-452-00 s METAL 20K 1% 1/6W
307)	R115	1-215-456-00 s METAL 30K 1% 1/6W
309)	R115	1-215-452-00 s METAL 20K 1% 1/6W
307)	R117	1-215-456-00 s METAL 30K 1% 1/6W
309)	R117	1-215-452-00 s METAL 20K 1% 1/6W
307)	R119	1-215-456-00 s METAL 30K 1% 1/6W
309)	R119	1-215-452-00 s METAL 20K 1% 1/6W
307)	R120	1-215-456-00 s METAL 30K 1% 1/6W
309)	R120	1-215-452-00 s METAL 20K 1% 1/6W
307)	R121	1-215-456-00 s METAL 30K 1% 1/6W
309)	R121	1-215-452-00 s METAL 20K 1% 1/6W
307)	R123	1-215-456-00 s METAL 30K 1% 1/6W
309)	R123	1-215-452-00 s METAL 20K 1% 1/6W
307)	R213	1-215-456-00 s METAL 30K 1% 1/6W
309)	R213	1-215-452-00 s METAL 20K 1% 1/6W

(MOA-7 BOARD/CONSOLE)

307)	R214	1-215-456-00 s METAL 30K 1% 1/6W
309)	R214	1-215-452-00 s METAL 20K 1% 1/6W
307)	R216	1-215-456-00 s METAL 30K 1% 1/6W
309)	R216	1-215-452-00 s METAL 20K 1% 1/6W
307)	R218	1-215-456-00 s METAL 30K 1% 1/6W
309)	R218	1-215-452-00 s METAL 20K 1% 1/6W
307)	R219	1-215-456-00 s METAL 30K 1% 1/6W
309)	R219	1-215-452-00 s METAL 20K 1% 1/6W
307)	R221	1-215-456-00 s METAL 30K 1% 1/6W
309)	R221	1-215-452-00 s METAL 20K 1% 1/6W
307)	R401	1-215-456-00 s METAL 30K 1% 1/6W
309)	R401	1-215-452-00 s METAL 20K 1% 1/6W
307)	R402	1-215-456-00 s METAL 30K 1% 1/6W
309)	R402	1-215-452-00 s METAL 20K 1% 1/6W
307)	R403	1-215-445-00 s METAL 10K 1% 1/6W
309)	R403	1-215-441-00 s METAL 6.8K 1% 1/6W
307)	R405	1-215-456-00 s METAL 30K 1% 1/6W
309)	R405	1-215-452-00 s METAL 20K 1% 1/6W
307)	R409	1-215-456-00 s METAL 30K 1% 1/6W
309)	R409	1-215-452-00 s METAL 20K 1% 1/6W
307)	R410	1-215-456-00 s METAL 30K 1% 1/6W
309)	R410	1-215-452-00 s METAL 20K 1% 1/6W
307)	R411	1-215-445-00 s METAL 10K 1% 1/6W
309)	R411	1-215-441-00 s METAL 6.8K 1% 1/6W
307)	R413	1-215-456-00 s METAL 30K 1% 1/6W
309)	R413	1-215-452-00 s METAL 20K 1% 1/6W
307)	R714	1-215-433-00 s METAL 3.3K 1% 1/6W
309)	R714	1-215-445-00 s METAL 10K 1% 1/6W
307)	R717	1-215-433-00 s METAL 3.3K 1% 1/6W
309)	R717	1-215-445-00 s METAL 10K 1% 1/6W
310)	R717	1-215-438-00 s METAL 5.1K 1% 1/4W
307)	R820	NOT IN USE.
309)	R820	1-247-903-00 s CARBON 1M 5% 1/4W

PS-312 BOARD
---

307)	D901	8-719-901-18 s DIODE ESAD83-004
310)	D901	8-719-033-57 s DIODE ESAD83-006

CN-837 BOARD
---

307)	C124	1-164-159-11 s CAP,CERAMIC 0.1uF 50V
309)	C124	DELETED.
307)	C125	1-164-159-11 s CAP,CERAMIC 0.1uF 50V
309)	C125	DELETED.

CPU-164 BOARD
---

307) D725 NOT IN USE.
311) D725 8-719-911-19 s DIODE,1SS119

307) R636 NOT IN USE.
311) R636 1-249-417-11 s CARBON 1.0K 5% 1/4W

307) RB4 1-235-195-00 s RESISTOR BLOCK 10Kx8
311) RB4 1-235-194-00 s RESISTOR BLOCK 4.7Kx8

307) RB101 1-235-337-11 s RESISTOR BLOCK 22Kx8
311) RB101 1-253-194-00 s RESISTOR BLOCK 4.7Kx8

307) RB304 1-235-195-00 s RESISTOR BLOCK 10Kx8
311) RB304 1-235-194-00 s RESISTOR BLOCK 4.7Kx8

MB-481 BOARD
---

307) R1 1-260-078-11 s CARBON 18 5% 1/2W
311) R1 1-215-860-11 s METAL 33 5% 1W

(FOR DMBK-4012)
307) Serial No. 10001 and higher.
309) Serial No. 10016 and higher.
310) Serial No. 10026 and higher.
311) Serial No. 10036 and higher.

AD-100 BOADE
---

307) C391 NOT IN USE.
309) C391 1-164-182-11 s CERAMIC,CHIP 0.0033uF 10% 100V

307) C392 NOT IN USE.
309) C392 1-164-182-11 s CERAMIC,CHIP 0.0033uF 10% 100V

307) C393 NOT IN USE.
309) C393 1-164-182-11 s CERAMIC,CHIP 0.0033uF 10% 100V

307) C413 1-124-903-11 s ELECT 1uF 20% 50V
311) C413 1-126-964-11 s ELECT 10UF 20% 50V

307) C591 NOT IN USE.
309) C591 1-164-182-11 s CERAMIC,CHIP 0.0033uF 10% 100V

307) C592 NOT IN USE.
309) C592 1-164-182-11 s CERAMIC,CHIP 0.0033uF 10% 100V

307) C593 NOT IN USE.
309) C593 1-164-182-11 s CERAMIC,CHIP 0.0033uF 10% 100V

307) C605 1-124-903-11 s ELECT 1uF 20% 50V
311) C605 1-126-923-11 s ELECT 220uF 20% 10V

307) CN712 1-560-780-11 s HEADER (RIGHT ANGLE TYPE) 10P
310) CN712 1-764-825-11 s HEADER (RIGHT ANGLE TYPE) 10P

307) R122 1-216-653-11 s METAL, CHIP 1.2K 0.5% 1/10W
309) R122 1-216-650-11 s METAL, CHIP 910 0.5% 1/10W

307) R222 1-216-653-11 s METAL, CHIP 1.2K 0.5% 1/10W
309) R222 1-216-650-11 s METAL, CHIP 910 0.5% 1/10W

307) R323 1-215-445-00 s METAL 10K 1% 1/6W
309) R323 1-215-439-00 s METAL 5.6K 1% 1/6W

307) R325 1-215-445-00 s METAL 10K 1% 1/6W
309) R325 1-215-437-00 s METAL 4.7K 1% 1/6W

(AD-100 BOARD/DMBK-4012)

307) R373 1-216-699-11 s METAL, CHIP 100K 0.5% 1/10W
311) R373 1-216-675-11 s METAL, CHIP 10K 0.5% 1/10W

307) R374 1-216-651-11 s METAL, CHIP 1K 0.5% 1/10W
311) R374 1-216-675-11 s METAL, CHIP 10K 0.5% 1/10W

307) R523 1-215-445-00 s METAL 10K 1% 1/6W
309) R523 1-215-439-00 s METAL 5.6K 1% 1/6W

307) R525 1-215-445-00 s METAL 10K 1% 1/6W
309) R525 1-215-437-00 s METAL 4.7K 1% 1/6W

307) R573 1-216-699-11 s METAL, CHIP 100K 0.5% 1/10W
311) R573 1-216-675-11 s METAL, CHIP 10K 0.5% 1/10W

307) R574 1-216-651-11 s METAL, CHIP 1K 0.5% 1/10W
311) R574 1-216-675-11 s METAL, CHIP 10K 0.5% 1/10W

VR-163 BOARD
---

307) R117 1-215-377-00 s METAL 15 1% 1/6W
309) R117 1-249-392-11 s CARBON 8.2 5% 1/4W

307) RV1 NOT IN USE.
310) RV1 1-223-614-11 s RES,VAR, CARBON 10K/10K

307) RV2 NOT IN USE.
310) RV2 1-223-614-11 s RES,VAR, CARBON 10K/10K

307) S101 NOT IN USE.
310) S101 1-692-902-11 s SWITCH, ROTARY

307) S102 NOT IN USE.
310) S102 1-692-902-11 s SWITCH, ROTARY

SONY

DIGITAL AUDIO MIXER

DMX-B4008
DMX-B4016

SUPPLEMENT-2 (FOR MAINTENANCE Part 2)

内容
資料の追加及び差し換え
下記ページをMAINENANCE MANUAL Part 2の該当ページに追加または差し換えて下さい。

目次(差し換え)
第2章　電気調整
2-1(J)～2-24(J) (追加)

対象マニュアル
DMX-B4008/DMX-B4016
MAINTENANCE MANUAL Part2 1st Edition

注意
SUPPLEMENT-1はMAINTENANCE MANUAL Part1用に発行されています。

SUBJECT
Addition and Replacement of Documents
Please replace the following pages with the corresponding page of MAINTENANCE MANUAL Part 2.

TABLE OF CONTENTS(Replacement)
SEC.2 ELECTRICAL ADJUSTMENTS
Pages 2-1(E) to 2-23(E) (Addition)

APPLICABLE MANUAL
DMX-B4008/DMX-B4016
MAINTENANCE MANUAL Part2 1st Edition

NOTE
Supplement-1 is supplied with MAINTENANCE MANUAL Part1.

MAINTENANCE MANUAL Part 2

DMX-B4008 (J,UC,EK,和,英)
DMX-B4016 (J,UC,EK,和,英)
9-976-773-81

Sony Corporation
Broadcast Products Company

Printed in Japan
1994. 8 16
© 1994
Published by Broadcast Products Company

目　次
TABLE OF CONTENTS

このマニュアルについて/
MANUAL STRUCTURE 1

第1章　サービスインフォメーション

1-1.　スイッチングレギュレーターの交換 ..... 1-1 (J)
　1-1-1.　DMX-B4008/B4016コンソール ..... 1-1 (J)
　1-1-2.　DMX-B4008プロセッサー ..... 1-3 (J)
　1-1-3.　BACK UP POWER SUPPLY DMBK-4007 (OPTION) ..... 1-5 (J)
　1-1-4.　DMX-B4016プロセッサー (RACK POWER ASSY) または BACK UP POWER SUPPLY DMBK-4008 (OPTION) ..... 1-5 (J)
　1-1-5.　電源ヒューズの交換について ..... 1-6 (J)
1-2.　補修用部品注意事項 ..... 1-7 (J)
　1-2-1.　補修用部品注意事項 ..... 1-7 (J)
　1-2-2.　チップ部品の交換方法 ..... 1-7 (J)
　1-2-3.　PLCC ICの取り外し方法 ..... 1-8 (J)
　1-2-4.　TIME KEEPER RAMの交換方法 ..... 1-9 (J)

第2章　電気調整

2-1.　準備 ..... 2-1 (J)
　2-1-1.　使用機器、治工具 ..... 2-1 (J)
　2-1-2.　初期設定 ..... 2-2 (J)
2-2.　MOA-7A/7B基板調整 (DMX-B4008/B4016コンソール) ..... 2-3 (J)
　2-2-1.　モニター出力レベル調整 ..... 2-4 (J)
　2-2-2.　サラウンドモニター出力レベル調整 ..... 2-5 (J)
　2-2-3.　HEADPHONES出力レベル調整 ..... 2-6 (J)
　2-2-4.　アナログメーター出力レベル調整 ..... 2-7 (J)
　2-2-5.　コミュニケーションレベル調整 ..... 2-8 (J)
2-3.　PLL調整 (CPU-164基板、DMX-B4008 プロセッサー) ..... 2-13 (J)
2-4.　DAコンバーターレベル調整1 (DIO-26基板、DMX-B4008プロセッサー) ..... 2-14 (J)
2-5.　DAコンバーターレベル調整2 (CN-837基板、DMX-B4008プロセッサー) ..... 2-16 (J)
2-6.　CPU-144基板調整 (DMX-B4016プロセッサー) ..... 2-17 (J)
　2-6-1.　PLL調整 ..... 2-17 (J)
　2-6-2.　DAコンバーターレベル調整1 ..... 2-18 (J)
　2-6-3.　DAコンバーターレベル調整2 ..... 2-19 (J)
2-7.　AD-100基板調整 (DMBK-4012装着時) ..... 2-20 (J)
　2-7-1.　MICアンプ調整 ..... 2-20 (J)
　2-7-2.　LINEアンプ調整 ..... 2-22 (J)
　2-7-3.　INSERTION SEND/RETURN アンプ調整 ..... 2-23 (J)
　2-7-4.　DAコンバーターレベル調整 ..... 2-24 (J)

SECTION 1 SERVICE OVERVIEW

1-1.　Switching Regulator Replacement ..... 1-1 (E)
　1-1-1.　DMX-B4008/B4016 Console ..... 1-1 (E)
　1-1-2.　DMX-B4008 Processor ..... 1-3 (E)
　1-1-3.　Back Up Power Supply DMBK-4007 (Option) ..... 1-5 (E)
　1-1-4.　DMX-B4016 Processor (Rack Power Assembly) or Back Up Power Supply DMBK-4008 (Option) ..... 1-5 (E)
　1-1-5.　Replacing Power Supply Fuse ..... 1-6 (E)
1-2.　Notes on Repairing Parts ..... 1-7 (E)
　1-2-1.　Notes on Repairing Parts ..... 1-7 (E)
　1-2-2.　Replacing Chip Parts ..... 1-7 (E)
　1-2-3.　Removing of PLCC IC ..... 1-8 (E)
　1-2-4.　Replacing TIME KEEPER RAM ..... 1-9 (E)

SECTION 2 ELECTRICAL ADJUSTMENTS

2-1.　Preparation ..... 2-1 (E)
　2-1-1.　Tools and Equipment Required ..... 2-1 (E)
　2-1-2.　Initial Setting ..... 2-2 (E)
2-2.　MOA-7A/7B Board Adjustment (DMX-B4008/B4016 Console) ..... 2-3 (E)
　2-2-1.　Monitor Output Level Adjustment ..... 2-4 (E)
　2-2-2.　Surround Monitor Output Level Adjustment ..... 2-5 (E)
　2-2-3.　Headphones Output Level Adjustment ..... 2-6 (E)
　2-2-4.　Analog Meter Output Level Adjustment ..... 2-7 (E)
　2-2-5.　Communication Level Adjustment ..... 2-8 (E)
2-3.　PLL Adjustment (CPU-164 Board, DMX-B4008 Processor) ..... 2-12 (E)
2-4.　DA Converter Level Adjustment 1 (DIO-26 Board, DMX-B4008 Processor) ..... 2-13 (E)
2-5.　DA Converter Level Adjustment 2 (CN-837 Board, DMX-B4008 Processor) ..... 2-15 (E)

2-6. CPU-144 Board Adjustment
(DMX-B4016 Processor) ..... 2-16 (E)
2-6-1. PLL Adjustment ..... 2-16 (E)
2-6-2. DA Converter Level Adjustment 1 ..... 2-17 (E)
2-6-3. DA Converter Level Adjustment 2 ..... 2-18 (E)
2-7. AD-100 Board Adjustment
(when DMBK-4012 is installed) ..... 2-19 (E)
2-7-1. MIC Amplifier Adjustment..... 2-19 (E)
2-7-2. LINE Amplifier Adjustment ..... 2-21 (E)
2-7-3. Insertion Send/Return Amplifier
Adjustment ..... 2-22 (E)
2-7-4. DA Converter Adjustment ..... 2-23 (E)

SECTION 3 BOARD LAYOUTS

3-1. DMX-B4008/DMX-B4016 METER UNIT/CONSOLE
IF-414 3-2
IF-414A 3-2
CPU-145 3-4
CPU-145A 3-4
IF-413 3-6
MOA-7A 3-8
MOA-7B 3-8
KY-225 3-10
IF-421 3-12
MT-88 3-14
PS-312 3-16
SW-604 3-18
SW-605 3-19
CN-838 3-20
CN-839 3-20
CN-840A 3-21
CN-840B 3-21
SW-606 3-22
VR-165 3-22
MIC 3-22
LED-156 3-23
CN-841 3-23
3-2. DMX-B4008 PROCESSOR
CPU-164 3-24
DIO-26 3-26
MIX-15 3-28
MB-481 3-30
CN-833 3-32
CN-834 3-33
CN-835 3-34
CN-836 3-35
CN-837 3-36
PS-313 3-37
DP-131 3-38
3-3. DMX-B4016 PROCESSOR
DP-131 3-38
CPU-144 3-40
IPM-48 3-42
MIX-16 3-44
MB-480 3-46
CN-827 3-48
CN-828A 3-49
CN-828B 3-49
CN-830 3-50
CN-831 3-51
CN-832A 3-52
CN-832B 3-52
PS-314 3-53
3-4. OPTIONAL ACCESSORIES
KY-225 3-10
SW-604 3-18
SW-605 3-19
LED-156 3-23
DP-131 3-38
IPM-48 3-42
MIX-16 3-44
CN-842 3-55
CPU-146 3-56
KY-302 3-58
MT-94 3-61
SW-602 3-62
VR-163 3-63
AD-100 3-64

SECTION 4 SCHEMATIC DIAGRAMS

4-1. DMX-B4008/DMX-B4016 METER UNIT/CONSOLE
IF-414 4-2
IF-414A 4-2
CPU-145 4-8
CPU-145A 4-8
IF-413 4-15
MOA-7A 4-19
MOA-7B 4-19
KY-225 4-24
LED-156 4-27
SW-604 4-29
SW-605 4-30
IF-421 4-31
MT-88 4-33
CONSOLE/METER UNIT Frame Wiring 4-34
CN-838 4-35
CN-839 4-36

CN-840A 4-37
CN-840B 4-37
CN-841 4-37
SW-606 4-37
VR-165 4-37
4-2. DMX-B4008 PROCESSOR
CPU-164 4-39
DIO-26 4-45
MIX-15 4-53
MB-481 4-60
CN-833 4-63
CN-834 4-64
CN-835 4-65
CN-836 4-66
CN-837 4-67
DP-131 4-69
PS-313 4-69
PROCESSOR Frame Wiring 4-69
4-3. DMX-B4016 PROCESSOR
DP-131 4-69
CPU-144 4-71
IPM-48 4-82
MIX-16 4-93
MB-480 4-106
CN-827 4-109
CN-828A 4-110
CN-828B 4-110
CN-830 4-111
CN-831 4-112
CN-832A 4-113
CN-832B 4-113
PS-314 4-115
PROCESSOR Frame Wiring 4-115
4-4. OPTIONAL ACCESSORIES
KY-225 4-24
LED-156 4-27
SW-604 4-29
SW-605 4-30
MT-94 4-36
DP-131 4-69
IPM-48 4-82
MIX-16 4-93
CPU-146 4-119
KY-302 4-126
CN-842 4-128
AD-100 4-129
SW-602 4-133
VR-163 4-133

SECTION 5 SEMICONDUCTOR PIN ASSIGNMENTS

SECTION 6 SPARE PARTS

6-1. Notes on Repair Parts 6-1
6-2. Exploded View 6-2
6-3. Electrical Parts List 6-25
6-4. Supplied Accessories 6-96
6-5. Optional Fixture 6-97

SECTION 7 CHANGED PARTS

第１章
サービスインフォメーション

1-1. スイッチングレギュレーターの交換

DMX-B4008/B4016は、電源をリダンダント化できるようになっている。
したがって、CPUが使用している5V系の下記のスイッチングレギュレーターを交換した際は、機器に合わせて出力電圧調整を行う必要がある。
また、プロセッサーの5V系電源を交換後は、PLL調整を行う必要がある。

5V系電源

調整の必要なスイッチングレギュレータ (型名)	ソニー部品番号	使用先
FAW05-20R	1-413-915-11	・PANEL 電源 ASSY (DMX-B4008, コンソール) ・PANEL POWER ASSY (DMX-B4016, コンソール) ・BACK UP POWER SUPPLY (DMBK-4009, OPTION)
MRW-171-1	1-413-955-11	・RACK 電源 ASSY (DMX-B4008, プロセッサー) ・BACK UP POWER SUPPLY (DMBK-4007, OPTION)
FAW05-30R	1-413-956-11	・RACK POWER ASSY (DMX-B4016, プロセッサー) ・BACK UP POWER SUPPLY (DMBK-4008, OPTION)

1-1-1. DMX-B4008/B4016コンソール

注意: 交換はコンソールの電源をOFFにし、電源コードを抜いて行う。

手順

(1) ネジ (B 3×6, 4本) を外し、PANEL電源ASSY (またはDMBK-4009) を矢印方向に外す。

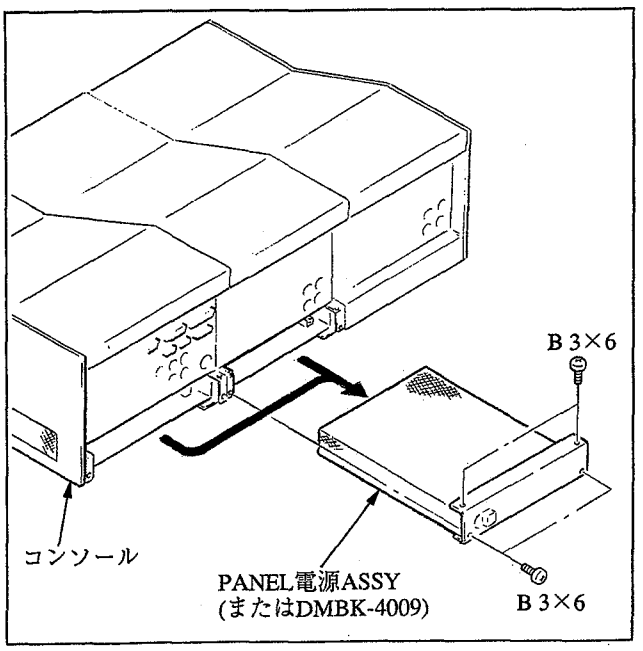

(2) PANEL電源ASSY (またはDMBK-4009) のカバー (①ネジPWH 3×6, 7本) およびパネル (②ネジB 3×6, 2本)を外す。

(3) 交換するスイッチングレギュレーターに接続されているハーネスをすべて外す。

(4) スイッチングレギュレーター (③ネジPSW 3×6, 4本) を外す。(FAW05-20Rの場合)

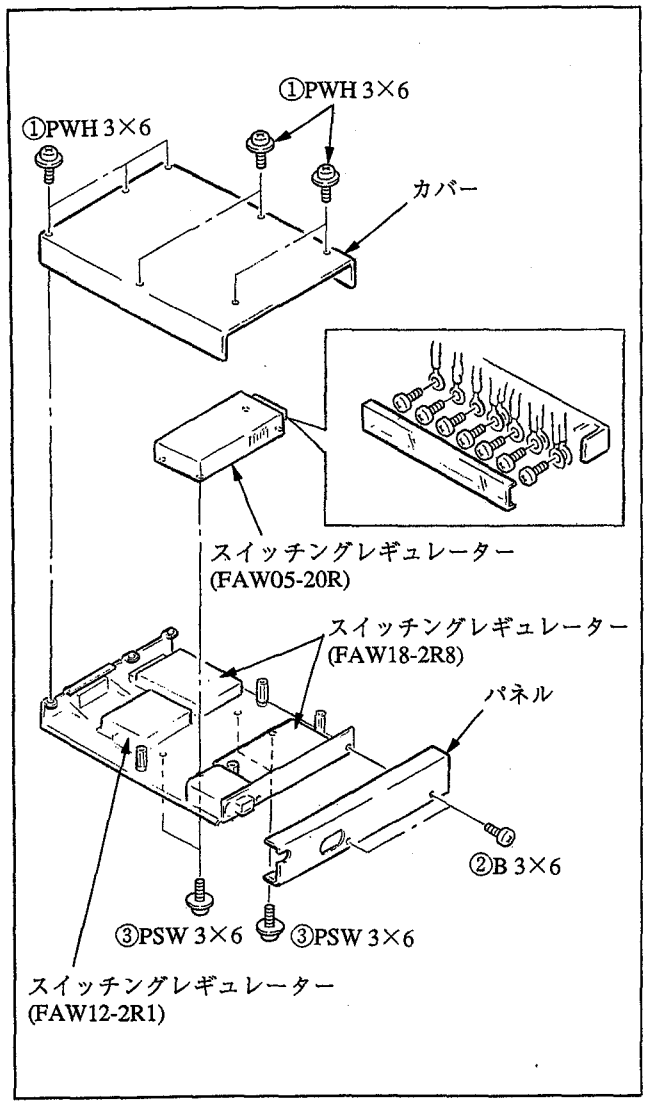

(5) 新しいスイッチングレギュレーターをPANEL電源ASSY (またはDMBK-4009) に取り付ける。
取り付け後、下記のスイッチングレギュレーターを交換した際は、以下の出力電圧調整を行う。

スイッチングレギュレーター:
FAW05-20R (ソニー部品番号1-413-915-11)

出力電圧調整

使用機器: テスター
使用治具: 電源延長治具 (コンソール用)
ソニー部品番号J-6401-170-A

手順

① 電源延長治具 (コンソール用) をコンソールに装着し、PANEL電源ASSY (またはDMBK-4009) を電源延長治具に接続する。

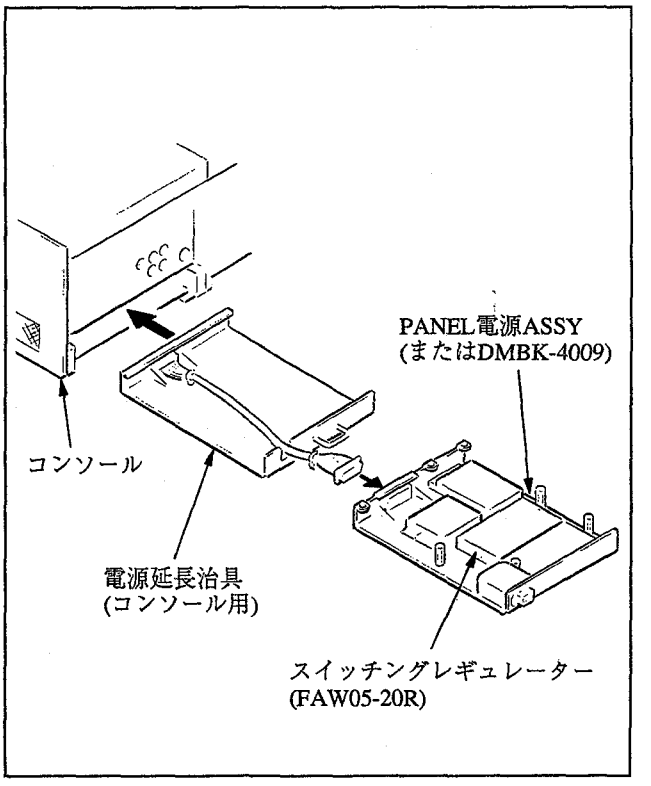

② コンソールの電源をONにし、テスターを使用して下図の箇所の出力電圧が下記規格を満足するように調整する。

規格: PS-312基板のCN918の1ピンと4ピン間の
電圧 = $+5.0\pm^{0.1}_{0}$ Vdc
コンソールのフェーダーパネルASSYのネジ (B 3×6) 4本を外して、フェーダーパネルを開く。
調整箇所: 調整VR/スイッチングレギュレーター (FAW05-20R)

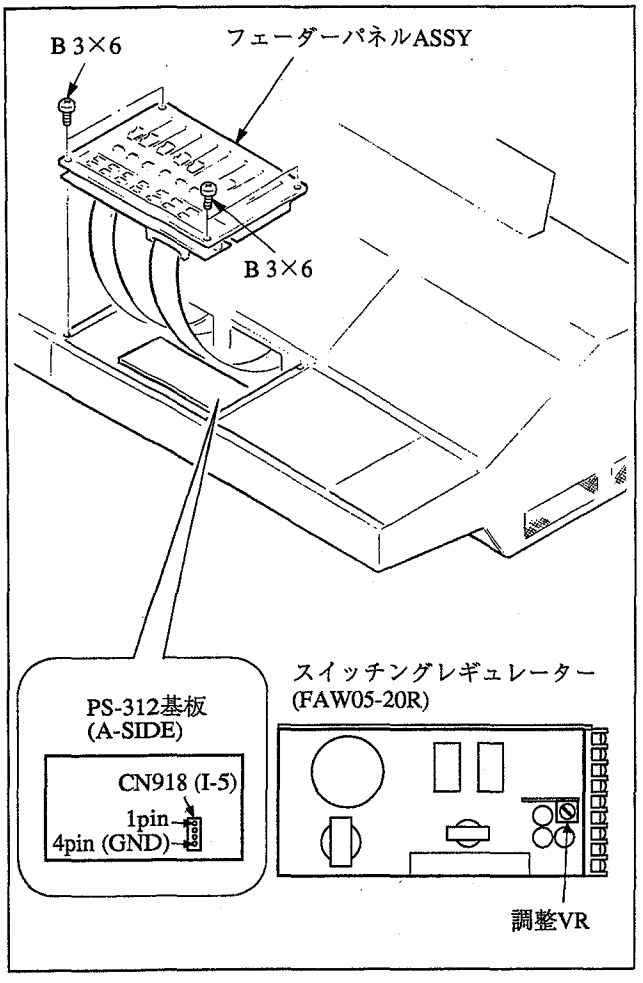

(6) 調整後、コンソールの電源をOFFにして、PANEL電源ASSY (またはDMBK-4009) にカバーを取り付ける。
(7) 電源延長治具 (コンソール用) をコンソールから外し、PANEL電源ASSY (またはDMBK-4009) をコンソールに手順 (1) ～ (4) の逆の手順で取り付ける。

1-1-2. DMX-B4008プロセッサー

注意: 交換はプロセッサーの電源をOFFにし、電源コードを抜いて行う。

手順

(1) プロセッサーのフロントパネルを開き、ストッパーを外す。
(2) ネジ (PSW 3×6, 4本) を外し、ガードパネルを外す。
(3) ネジ (PSW 3×6, 2本) を外し、RACK電源ASSYを矢印方向に引き抜く。

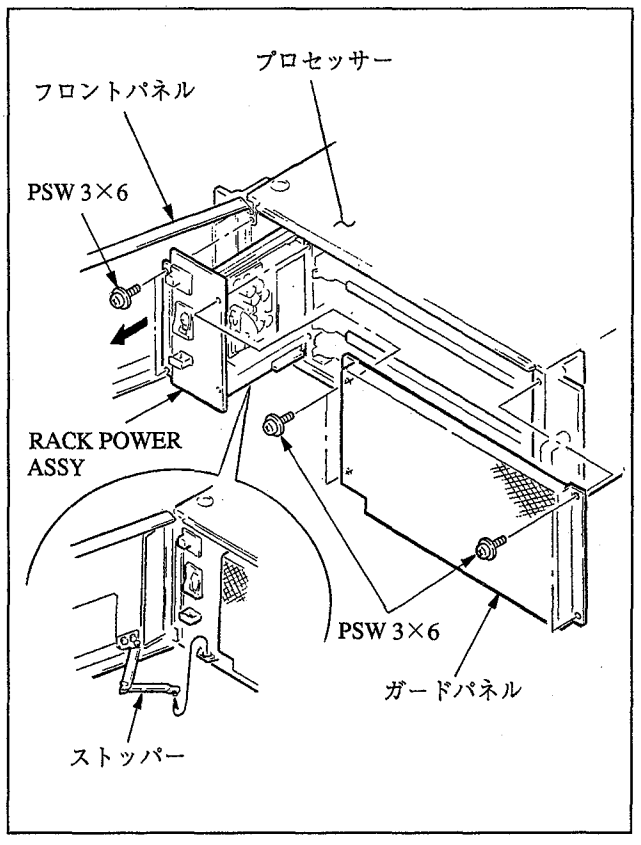

(4) ネジ (PSW 3×6, 3本) を外し、SRカバーを外す。
(5) スイッチングレギュレーターのコネクター (CN1, CN2) より、ハーネスを外す。
(6) ネジ (PSW 3×8, 2本/PS 3×6, 2本) を外し、スイッチングレギュレーター(MRW-171-1)を矢印方向に外す。

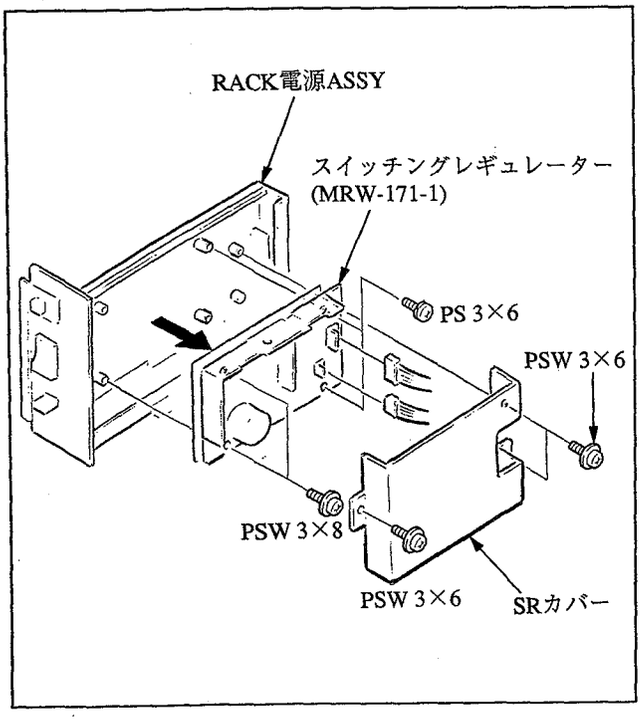

(7) 新しいスイッチングレギュレーター (MRW-171-1) をRACK電源ASSYに取り付ける。取り付け後、以下の出力電圧調整を行う。

出力電圧調整

使用機器: テスター

使用治具: 電源延長治具 (DMX-B4008プロセッサー用)
ソニー部品番号J-6401-160-A
延長基板EX-360: ソニー部品番号J-6400-050-A

手順

① 電源延長治具 (DMX-B4008プロセッサー用) をプロセッサーに装着し、RACK電源ASSYを電源延長治具 (DMX-B4008プロセッサー用) に接続する。

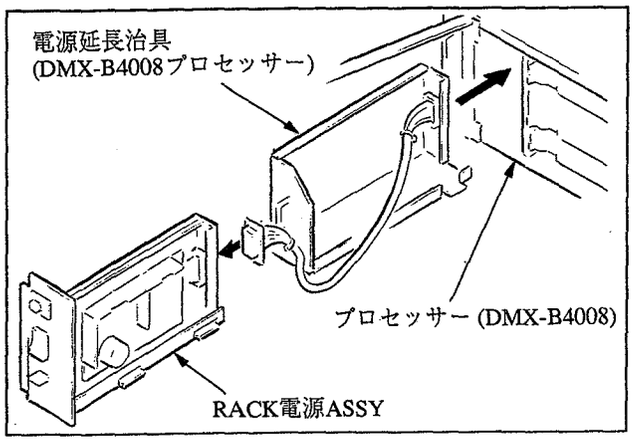

② CPU-164基板(プロセッサー)を延長基板EX-360で延長する。

③ プロセッサーの電源をONにし、テスターを使用してCPU-164基板の下記箇所の出力電圧が下記規格を満足するように調整する。

規格: CPU-164基板のCN1コネクターの 29Cピンと E1 (GND) 間の電圧 = $+5.0\pm^{0.1}_{0}$ Vdc
調整箇所: 調整VR/スイッチングレギュレーター (MRW-171-1)

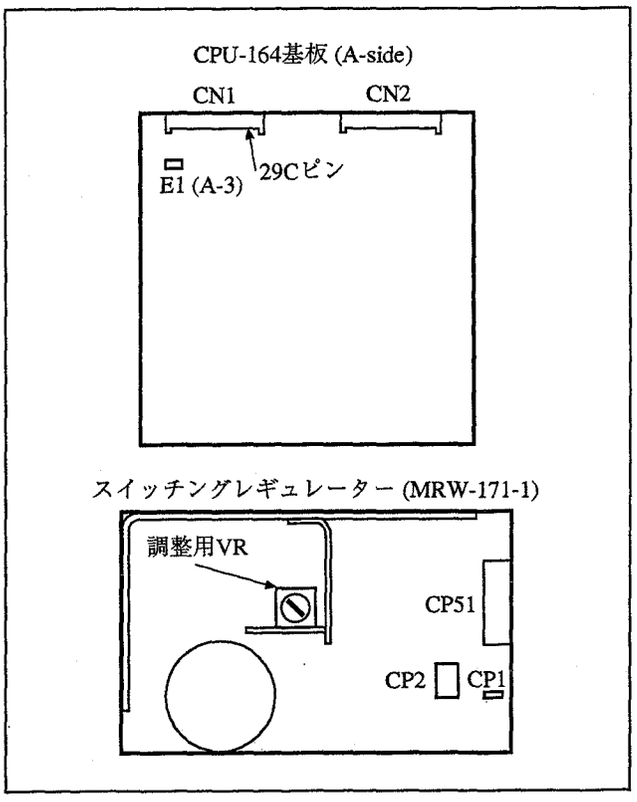

(8) 調整後、プロセッサーの電源をOFFにして、電源延長治具 (DMX-B4008プロセッサー用) および延長基板EX-360を外す。
(9) RACK電源ASSY (スイッチングレギュレータにSRカバーを取り付け後) およびCPU-164基板をプロセッサーに装着する。装着後、"2-3. PLL調整" を必ず行う。

1-1-3. BACK UP POWER SUPPLY DMBK-4007 (OPTION)

DMBK-4007で使用されているスイッチングレギュレーター(MRW-171-1) を交換した際は、上記 "1-1-2. DMX-B4008プロセッサーの手順 (7)" の出力電圧調整を行う。
調整は、DMBK-4007をDMX-B4008に接続して行う。
調整後、"2-3. PLL調整" を必ず行う。

1-1-4. DMX-B4016プロセッサー (RACK POWER ASSY) またはBACK UP POWER SUPPLY DMBK-4008 (OPTION)

注意: 交換はプロセッサーの電源をOFFにし、電源コードを抜いて行う。

手順

(1) プロセッサーのフロントパネルを開き、ストッパーを外す。
(2) ネジ (PSW 3×6, 4本) を外し、RACK POWER ASSY (またはDMBK-4008) を矢印方向に引き抜く。
(3) RACK POWER ASSY (またはDMBK-4008) の電源カバー (カヌークリップ4本) を外す。

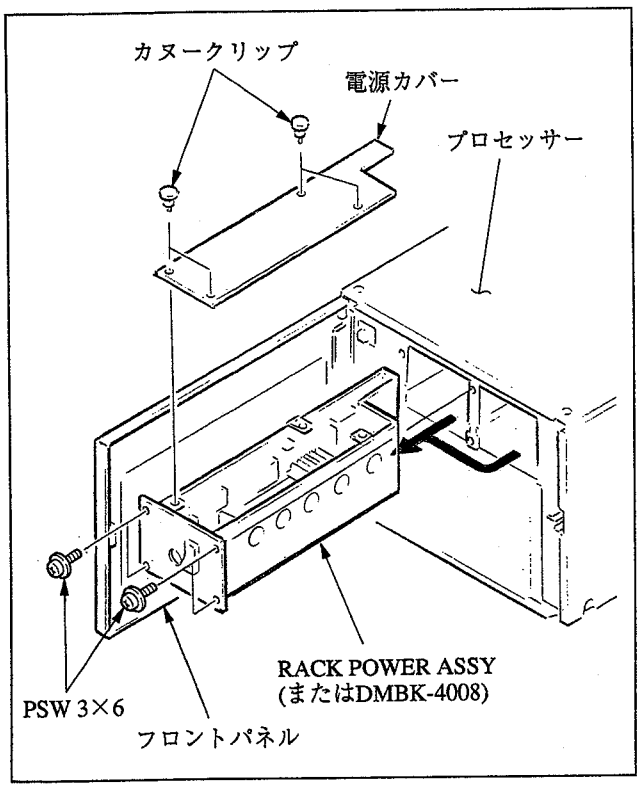

(4) ネジ (PWH 3×6, 18本) を外し、RACK POWER ASSY (またはDMBK-4008) より電源スイッチおよびスイッチングレギュレーター (3個) を外す。
(5) ネジ (PSW 4×8, 2本) を外し、ハーネスのコネクターをRACK POWER ASSY (またはDMBK-4008) より外す。
(6) スイッチングレギュレーター (3個) をハーネスと一緒にRACK POWER ASSY (またはDMBK-4008) より取り出す。
(7) 交換するスイッチングレギュレーターに接続されているハーネスをすべて外す。

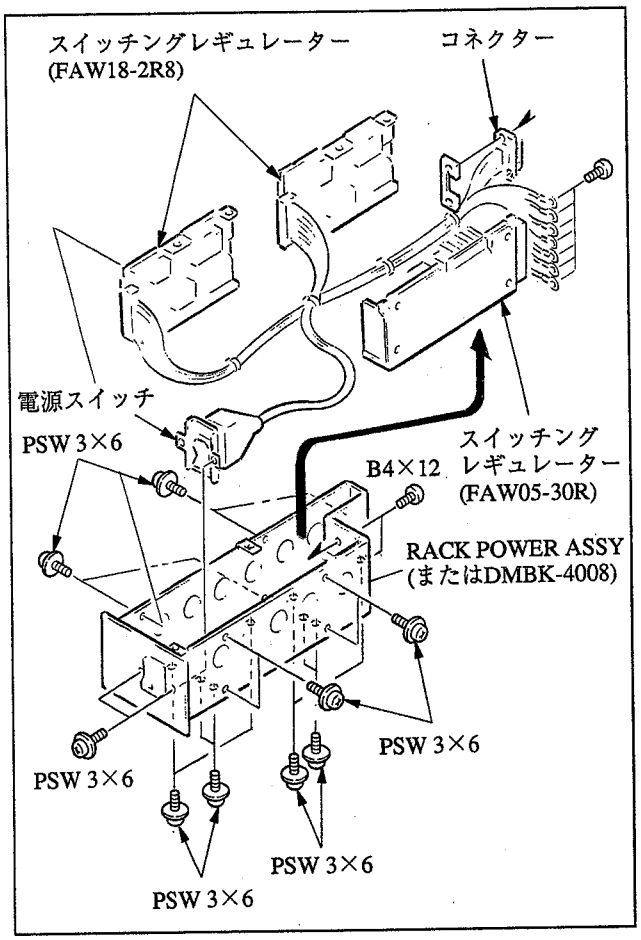

(8) 新しいスイッチングレギュレーターを手順 (4) ～ (7) の逆の手順で、RACK POWER ASSY (またはDMBK-4008) に取り付ける。
取り付け後、下記のスイッチングレギュレーターを交換した際は、以下の出力電圧調整を行う。

スイッチングレギュレーター:
FAW05-30R (ソニー部品番号1-413-956-11)

出力電圧調整
使用機器: テスター
手順
① プロセッサーをラックより引き出す。
② プロセッサーの天板を外す。
(MAINTENANCE MANUAL Part 1 "3-2. 外装の取り外し" 参照)
③ 電源カバー (カヌークリップ4個) をRACK電源ASSY (またはDMBK-4008) より外す。
④ プロセッサーの電源をONにし、テスターを使用してMIX-16基板の下記箇所の出力電圧が下記規格を満足するように調整する。

注意: DMBK-4010またはDMBK-4011を装着したときは、DMBK-4010またはDMBK-4011のMIX-16基板を調整する。

規格: MIX-16基板のIC903の20ピンと E1 (GND) 間の電圧

DMBK-4010/4011未装着時
電圧 = ＋5.1$\pm^{0.1}_{0}$ Vdc

DMBK-4010装着時
電圧 = ＋4.9$\pm^{0.1}_{0}$ Vdc

DMBK-4011装着時
電圧 = ＋5.0$\pm^{0.1}_{0}$ Vdc

調整箇所: 調整VR/スイッチングレギュレーター (FAW05-30R)

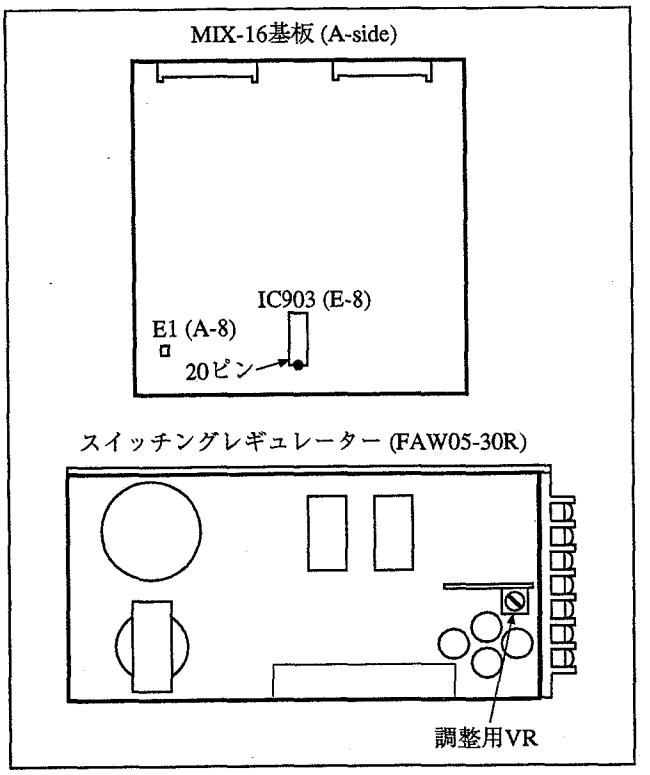

(9) RACK電源ASSY (またはDMBK-4008) を手順①～③の逆の手順で取り付ける。
装着後、"2-6-1. PLL調整" を必ず行う。

1-1-5. 電源ヒューズの交換について

下表のスイッチングレギュレーターには、電源ヒューズが搭載されている。電源ヒューズを交換する際はセット内の異物等、ショートの原因を取り除いてから交換する。

注意: ヒューズの交換は必ず電源をOFFにし、電源コードを抜いてから "1-1-1.～1-1-4." 項を参照し行う。

スイッチングレギュレータ (部品番号)	使用電源ヒューズ	
	定　格	ソニー部品番号
FAW12-2R1 (1-413-918-11)	250V 2.5A	1-532-826-11
FAW18-2R8 (1-413-918-11)	250V 3A	Pending
FAW05-20R (1-413-915-11)	250V 5A	Pending
MRW-171-1 (1-413-955-11)	250V 3.15A	1-576-133-11
FAW05-30R (1-413-956-11)	250V 6.3A	Pending

1-2. 補修用部品注意事項

1-2-1. 補修用部品注意事項

(1) 安全重要部品
回路図、分解図、電気部品表中で⚠印付きの部品は、安全性を維持するために重要な部品である。従ってこれらの部品を交換するときには、必ず指定の部品と交換すること。

(2) 部品の共通化
ソニーから供給される部品はセットに実装されているものと異なることがある。
これは部品の共通化、改良等によるものである。
分解図や電気部品表には現時点での共通化された部品が記載されている。

(3) 部品の在庫
部品表のSP (Supply code) 欄にoで示される部品は交換頻度が低い部品で、在庫していないことがあり、納期が長くなることがある。

(4) コンデンサ、抵抗の単位
回路図、分解図、電気部品表中、特に明記したものを除き、下記の単位は省略されいてることがある。
コンデンサ　：μF
抵抗　　：Ω

1-2-2. チップ部品の交換方法

用意する工具

はんだコテ	：20 W程度。できれば、コテの温度を270±10℃にコントロールできる温度コントローラを使用すること。
編組線	：SOLDER TAULまたは同等品 ソニー部品番号　7-641-300-81
はんだピンセット	：直径0.6 mmが望ましい。

はんだ付条件

コテ温度	：270±10℃
はんだ付け時間	：1端子について2秒以内にする。

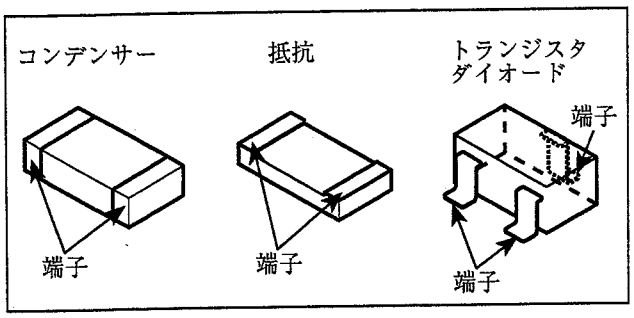

• 抵抗、コンデンサの交換

(1) はんだコテの先をチップ部品の上に載せてチップ部品を加熱し、はんだが溶けた状態で横にずらす。
(2) 取り外した部分のパターンはがれ、隣接はんだ付け部のダメージ、ブリッジなどがないことを確認する。
(3) パターンにうすく予備はんだをする。
(4) 新しいチップ部分をパターンに載せ、両端をはんだ付けする。

注意：取り外したチップ部品は再び使わないこと。

• トランジスタ、ダイオードの交換

(1) ニッパにて部品の端子を切断する。
(2) 切断した端子をはんだコテで取り除く。
(3) 取り除いた部分のパターンはがれ、隣接はんだ付け部のダメージ、ブリッジなどがないことを確認する。
(4) パターンにうすく予備はんだをする。
(5) 新しいチップ部品をパターンに載せ、端子をはんだ付けする。

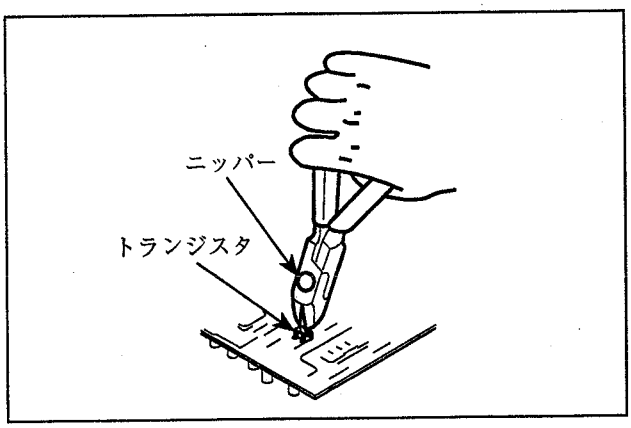

• ICの交換

(1) 編組線を使って端子のはんだを取り除く。
(2) はんだコテで加熱しながら、ピンセットなどを使って端子を1本ずつパターンから外し、ICを取り除く。
(3) 取り除いた部分のパターンはがれ、隣接はんだ付け部のダメージ、ブリッジなどがないことを確認する。
(4) パターンにうすく予備はんだをする。
(5) 新しいチップ部品をパターンに載せ、端子をはんだ付けする。

1-2-3. PLCC ICの取り外し方法

ICソケットに差し込まれたPLCCタイプのICを取り外す場合は、下記の工具を使用することを推奨する。20～124ピンまでのピン数のICに利用できる。

PLCCソケット用引き抜き工具
　ソニー部品番号J-6035-070-A

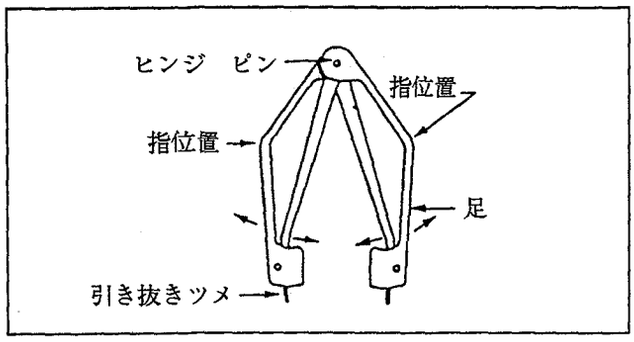

注意: ・引き抜き工具でICチップを上方に引っ張らないこと。
　　・必要以上の力で工具をはさみ込まないこと。

1. 工具の足をソケットのスロットの長さに合わせる。

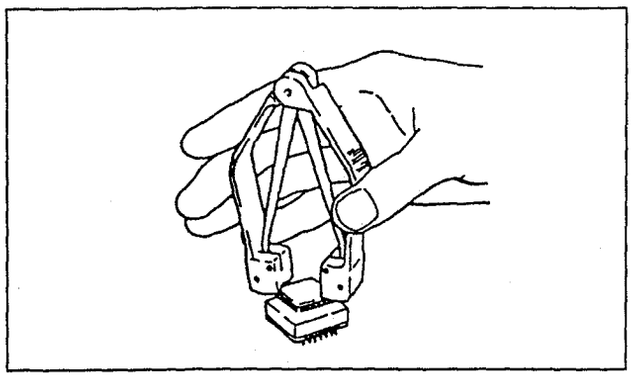

2. 工具の先端の引き抜きツメをICソケットのスロットに差し込み、引き抜き工具の図に示すAの部分がソケットにあたるまで押し込む。

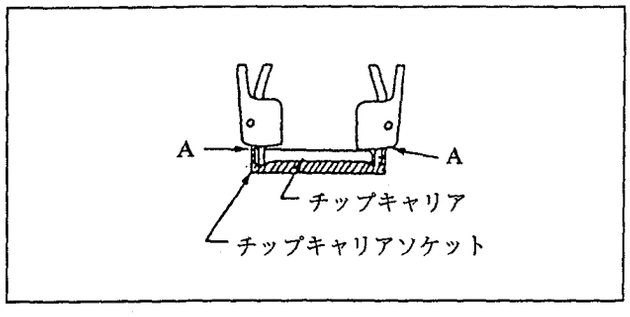

3. 図のように引き抜き工具のリブの部分を持つ。ソケットには下方向に小さな力がかかる。

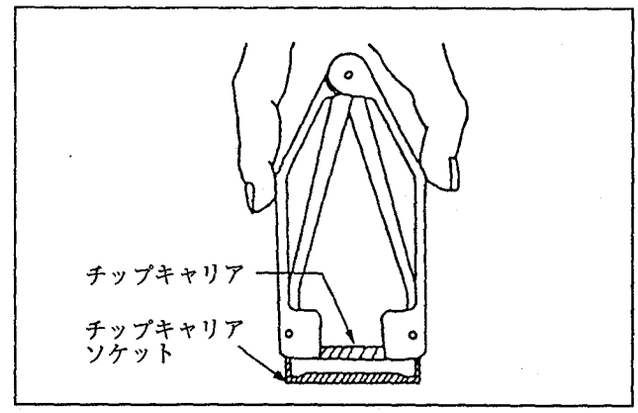

4. 引き抜き工具をはさみ込む。これにより、工具の足が伸びると同時に、工具の先端のツメがICチップをつかみ、上方向に引き抜く。
5. 引き抜いた後、力をゆるめ、ICチップを引き抜き工具から外す。

1-2-4. TIME KEEPER RAMの交換方法

DMX-B4008/B4016およびDMBK-4001は、セットアップデータ保存用としてリチウム電池内蔵のTIME KEEPER RAM (DS1634-150) を使用している。

機器名	使用先
DMX-B4008	IC204, CPU-145基板 (コンソール)
DMX-B4016	IC204, CPU-145A基板 (コンソール)
DMBK-4001	IC202, CPU-146基板 (コントロールパネルASSY)

このリチウム電池の寿命が切れると、カスタマー毎のセットアップ内容が記憶できなくなる。そのため、約5年毎にこのICを交換する必要がある。

用意する部品

TIME KEEPER RAM DS1643-150: ソニー部品番号8-759-097-08

交換手順

DS1634-150はICソケットにマウントされているので、ピンセット等でICソケットより外し、交換する。

交換後の処理

(1) DMX-B4008/B4016のDS1643-150 (CPU-145/145A基板) を交換した後は、コンソールの電源をONにする前に以下の作業を行う。
CPU-145 (A) 基板のS103ビットスイッチを下記のように設定する。
S103-1スイッチ: ON
S103-4スイッチ: ON
上記スイッチ設定後、コンソールの電源をONにする。

(2) CPUが立ち上がったら (1) でONにしたビットスイッチをOFFにし、コンソールの電源をOFFにする。

(3) コンソールの電源を再度ONにし、カスタマー毎のセットアップを行う。

第2章
電気調整

ここでは、保守および修理の際に必要な下記基板の電気調整について述べる。

基板名	内容	使用先
MOA-7A/7B	2-2-1. モニター出力レベル調整 2-2-2. サラウンドモニター出力レベル調整 2-2-3. HEADPHONES出力レベル調整 2-2-4. アナログメーター出力レベル調整 2-2-5. コミュニケーションレベル調整	DMX-B4008/B4016コンソール
CPU-164	2-3. PLL調整	DMX-B4008プロセッサー
DIO-26	2-4. DAコンバーターレベル調整 1	DMX-B4008プロセッサー
CN-837	2-5. DAコンバーターレベル調整 2	DMX-B4008プロセッサー
CPU-144	2-6-1. PLL調整 2-6-2. DAコンバーターレベル調整1	DMX-B4016プロセッサー
AD-100 (DMBK-4012装着時)	2-7-1. MICアンプ調整 2-7-2. LINEアンプ調整 2-7-3. INSERTION SEND/RETURNアンプ調整 2-7-4. DAコンバーターレベル調整	DMX-B4008/B4016コンソール

2-1. 準備

2-1-1. 使用機器、治工具

使用機器

名称	仕様 (minimum)	機器名
周波数カウンター	有効桁数: 6桁以上	HEWLETT PACKARD HP5315 または相当品
オーディオ アナライザー	・オシレーター 周波数レンジ: 10 Hz to 100 kHz 出力レベル: −70 to +30 dBs バランス型 ・レベルメーター 測定レンジ: −70 to +30 dBs バランス型	SOUND TECHNOLOGY ST-1710A または 相当品

治工具

名称	ソニー部品番号	備考
延長基板 EX-360	J-6400-050-A	DMX-B4008プロセッサー用
延長基板 EX-455	J-6401-190-A	DMX-B4016プロセッサー用
Dsub-XLR変換ケーブル	J-6401-180-A	D/Aコンバーターレベル調整用
ECD-3C, ECD-10CまたはECD-30C	別売品	デジタルオーディオ (AES/EBU) 接続用
調整用ドライバー (2mm)	7-770-731-03	

2-1-2. 初期設定

本調整は、特に指定のない限り、下記の設定で行う。

1.接続

調整時は、プロセッサーリアパネルのPGM OUTコネクターとST1コネクター間を接続 ケーブル (デジタルオーディオ (AES/EBU) 用) ECD-3Cで接続する。

DMX-B4008

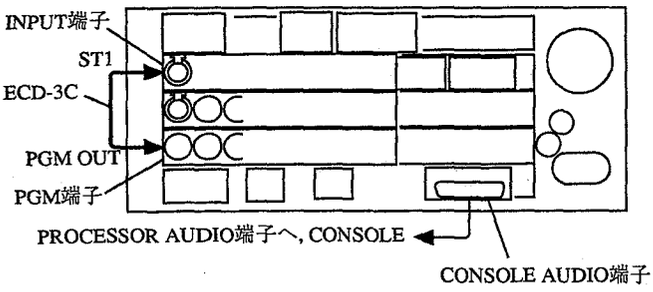

DMX-B4016

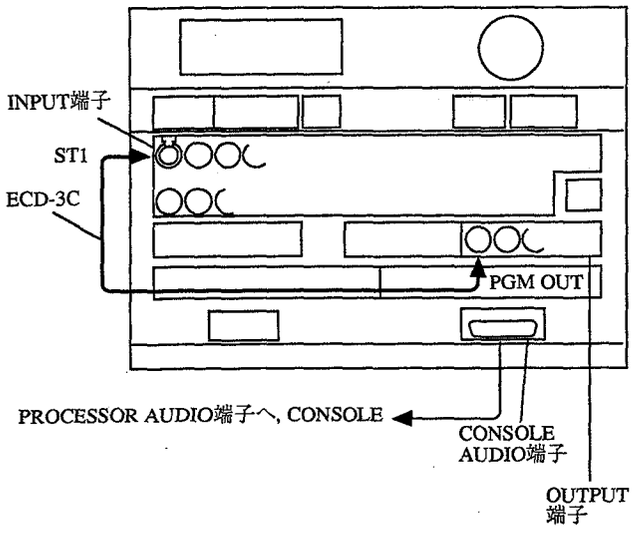

2.スイッチ、コントロールの初期設定

DMX-B4008/B4016メーターユニット

スイッチ

AUTO: OFF
HOLD: OFF

DMX-B4008/B4016コンソール

チャンネル操作パネル (各チャンネルブロック)

スイッチ

ACCESS: OFF
MUTE: OFF
(どちらか1つが点灯)
PFL: OFF
START: OFF
STOP: OFF

コントロール

チャンネルフェーダー: セットアップ画面のDIAGNOSTICS画面を開いて、FADER/SWITCH動作チェックモードを選択して、チャンネルフェーダーのレベルを"B1"に設定する。設定方法については、OPERATION MANUAL "第3章 操作"を参照。

セットアップ (タッチ) パネル

下記セットアップ画面を選択し、以下のように設定する。
下記セットアップ画面以外の設定は任意とする。
設定方法については、OPERATION MANUAL"第3章 操作"を参照。

SCENE画面

シーン00を設定 (再現: SET) する。

INSERTION画面

INSERTION ON/OFF: OFF

MONITOR画面

MODE: ST (CONTROL ROOM, STUDIO部共)
SOURCE: PGM (CONTROL ROOM, STUDIO部共)

MT (METER)/OSC/TB画面

METER SELECT (DMX-B4016のみ): PGM, MIX1, AUX1
OSC: OFF
TB/ID: OFF

マスター操作 (モニター) パネル

COMMUNICATION部

SP LVLコントロール: MAX (時計方向に回しきる)
TB LVLコントロール: MAX
SEND1、2、3スイッチ: OFF

STUDIO部

STUDIOモニターコントロール:
MAX (時計方向に回しきる)
CUEスイッチ: OFF
CUTスイッチ: OFF

CONTROL ROOM部

CONTROL ROOMモニターコントロール:
MAX (時計方向に回しきる)
ALTスイッチ: OFF
CUTスイッチ: OFF

HEADPHONES部

HEADPHONESコントロール:
MAX (時計方向に回しきる)
マスターフェーダー: 0位置 (MAX)

コンソール内の基板上スイッチ、ジャンパーの設定

コンソールの下記基板上のスイッチ、ジャンパー設定は、現状のシステム設定とする。

- CPU-145, MOA-7A/B, IF-414, KY-225基板

DMX-B4008プロセッサー

プロセッサーの下記基板上のスイッチ、ジャンパー設定は、現状のシステム設定とする。

- CPU-164, DIO-26, MIX-15基板
  ただし、入力信号のディエンファシス処理をすべてAUTOモード (MIX-15基板のS2-1 to 8ビットスイッチをすべてOFFに設定) に設定する。

DMX-B4016プロセッサー

プロセッサーの下記基板のスイッチ、ジャンパー設定は、現状のシステム設定とする。

- CPU-144, IPM-48, MIX-16基板
  ただし、入力信号のディエンファシス処理をすべてAUTOモード (IPM-48基板のS703-1 to 8, S704-1 to 8および S705-3 to 4 ビットスイッチをすべてOFFに設定。) に設定する。

DMBK-4001 (OPTION)

コントロールパネル

調整時のスイッチ、コントロールの設定は、なし。

CPU-146基板

スイッチ、ジャンパーの設定は現状の設定とする。

DMBK-4012 (OPTION)

HAパネル (20ビットマイク/ラインインプットモジュール)

+48Vスイッチ: OFF
LINEスイッチ: OFF
ϕスイッチ: OFF
INSスイッチ: OFF
MIC ONスイッチ: ON
GAINスイッチ: 30 (dB)
TRIMコントロール: センター位置

AD-100基板

基板上のスイッチ設定は現状の設定とする。

2-2. MOA-7A/7B基板調整 (DMX-B4008/B4016コンソール)

準備

タッチパネルASSY (コンソール) を外し (ハーネスは接続したままの状態)、MOA-7A/7B基板が調整できる状態にする。(タッチパネルASSYの外し方は、MAINTENANCE MANUAL Part1の"3-7. タッチパネル/ELディスプレイの交換"参照)

使用機器

オーディオアナライザー (オーディオレベルメーター)

調整箇所

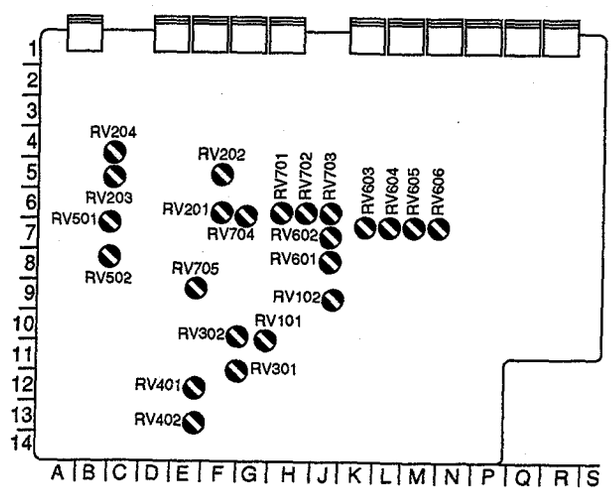

MOA-7A/7B BOARD (A-side)

2-2-1. モニター出力レベル調整

ここでは、コンソールの下記モニター出力の出力レベル調整を行う。

モニター出力
- CONTROL ROOM MONITOR OUT L
- CONTROL ROOM MONITOR OUT R
- STUDIO MONITOR OUT SP-L
- STUDIO MONITOR OUT SP-R
- STUDIO MONITOR OUT HP-L
- STUDIO MONITOR OUT HP-R

使用機器

オーディオレベルメーター (オーディオアナライザー)

スイッチ、コントロール設定

"2-1-2. 初期設定"に同じ。

接続

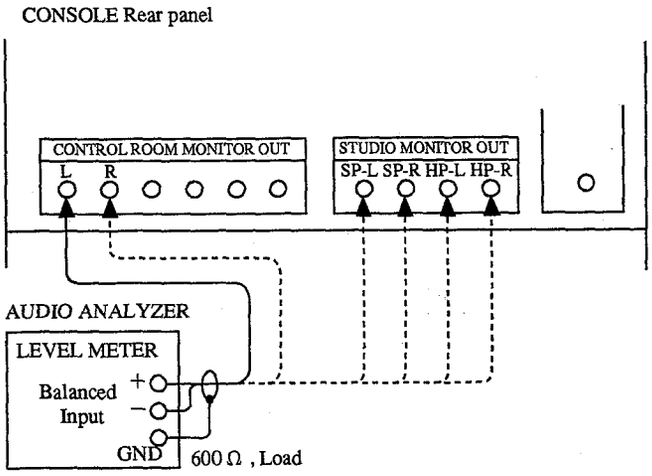

調整手順

(1) セットアップ画面のMT/OSC/TB画面を開いて、OSC (内蔵オシレーターの出力) をPGM出力に設定する。
(メーターユニットのステータスインジケーターOSCが点灯)

(2) 調整

調整項目	調整時の状態	規格	調整箇所 (MOA-7A/7B基板)
CONTROL ROOM MONITOR OUT L 出力レベル調整	オーディオレベルメーター (オーディオアナライザー) を CONTROL ROOM MONITOR OUT L コネクターに接続する。	出力レベル: +4.0 dBs ±0.1 dB	RV101 (G, 11)
CONTROL ROOM MONITOR OUT R 出力レベル調整	オーディオレベルメーター (オーディオアナライザー) を CONTROL ROOM MONITOR OUT R コネクターに接続する。	出力レベル: +4.0 dBs ±0.1 dB	RV102 (J, 9)
STUDIO MONITOR OUT SP-L 出力レベル調整	オーディオレベルメーター (オーディオアナライザー)を STUDIO MONITOR OUT SP-L コネクターに接続する。	出力レベル: +4.0 dBs ±0.1 dB	RV201 (F, 6)
STUDIO MONITOR OUT SP-R 出力レベル調整	オーディオレベルメーター (オーディオアナライザー) を STUDIO MONITOR OUT SP-R コネクターに接続する。	出力レベル: +4.0 dBs ±0.1 dB	RV202 (F, 5)
STUDIO MONITOR OUT HP-L 出力レベル調整	オーディオレベルメーター (オーディオアナライザー) を STUDIO MONITOR OUT HP-L コネクターに接続する。	出力レベル: +4.0 dBs ±0.1 dB	RV203 (B, 4)
STUDIO MONITOR OUT HP-R 出力レベル調整	オーディオレベルメーター (オーディオアナライザー) を STUDIO MONITOR OUT HP-R コネクターに接続する。	出力レベル: +4.0 dBs ±0.1 dB	RV204 (B, 4)

(0 dBs = 0.775 Vrms)

(3) 調整後、OSCの設定をOFFにする。
(メーターユニットのステータスインジケーターOSCが消灯)

2-2-2. サラウンドモニター出力レベル調整

ここでは、コンソールの下記モニター出力の出力レベル調整を行う。

モニター出力
- CONTROL ROOM MONITOR OUT C
- CONTROL ROOM MONITOR OUT S

使用機器

オーディオオシレーター (オーディオアナライザー)
オーディオレベルメーター (オーディオアナライザー)

スイッチ、コントロール設定

"2-1-2. 初期設定"に同じ。

接続

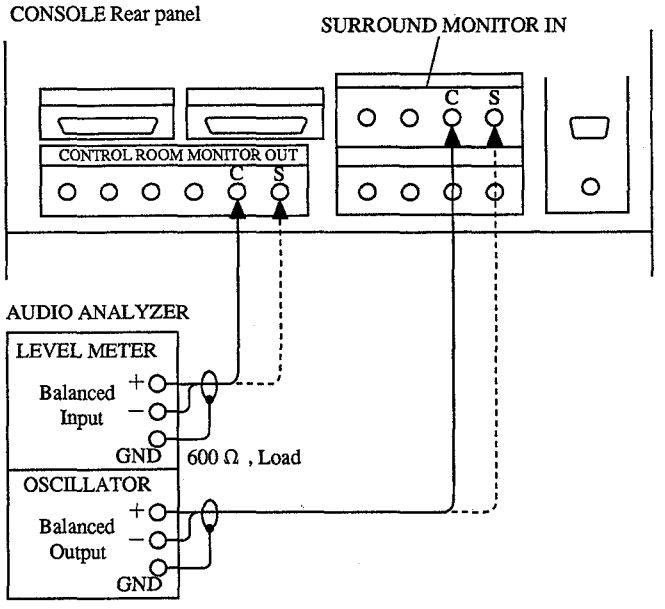

調整手順

(1) セットアップ画面のMONITOR画面を開いて
モニターモードのSURR (サラウンド) を選択する。

(2) 調整

調整項目	調整時の状態	規格	調整箇所 (MOA-7A/7B基板)
CONTROL ROOM MONITOR OUT C 出力レベル調整	・オーディオオシレーターより1 kHz, +4 dBs (0 dBs=0.775 Vrms) の信号をSURROUND MONITOR IN C コネクターに入力する。 ・CONTROL ROOM MONITOR OUT C コネクターにレベルメーターを接続する。	出力レベル: +4.0 dBs ±0.1 dB	RV301 (F, 12)
CONTROL ROOM MONITOR OUT S 出力レベル調整	・オーディオオシレーターより1 kHz, +4 dBs (0 dBs=0.775 Vrms) の信号をSURROUND MONITOR IN S コネクターに入力する。 ・CONTROL ROOM MONITOR OUT S コネクターにレベルメーターを接続する。	出力レベル: +4.0 dBs ±0.1 dB	RV302 (F, 10)

(0 dBs = 0.775 Vrms)

(3) 調整後、モニターモードの設定を調整前の設定にする。

2-2-3. HEADPHONES出力レベル調整

使用機器、治工具 (部品)

オーディオレベルメーター (オーディオアナライザー)
ヘッドホンプラグ: 1

スイッチ、コントロール設定

"2-1-2. 初期設定"に同じ。

接続

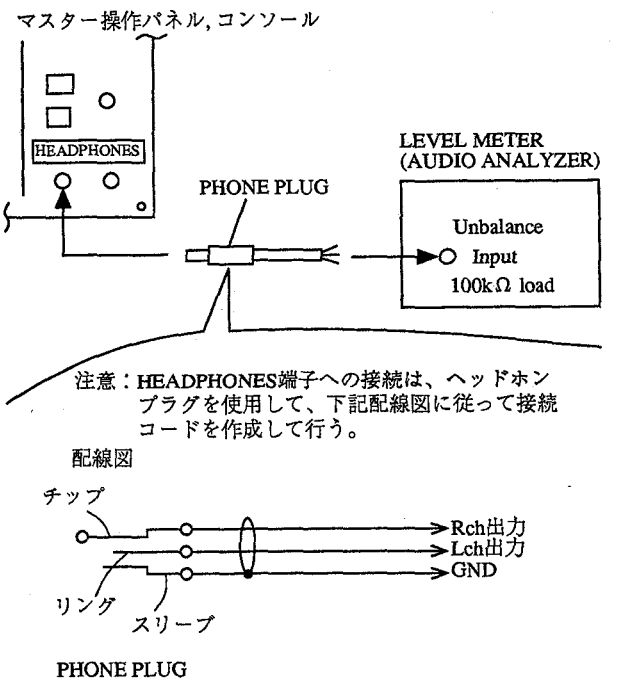

調整手順

(1) セットアップ画面のMT/OSC/TB画面を開いてOSC (内蔵オシレーターの出力) をPGM出力に設定する。(メーターユニットのステータスインジケーターOSCが点灯)

(2) 調整

調整項目	調整時の状態	規格	調整箇所 (MOA-7A/7B基板)
ステップ1 HEADPHONES Lch 出力レベル調整	・HEADPHONESコントロール (マスター操作パネル、コンソール) を、MAX位置にする。 ・HEADPHONES端子のLch出力に、レベルメーター (オーディオアナライザー) を接続する。	HEADPHONES Lch 出力レベル: 0 dBs ± 0.1 dB	RV401 (E, 12)
ステップ2 HEADPHONES Rch 出力レベル調整	・下記設定以外はステップ1に同じ。 ・HEADPHONES端子のRch出力に、レベルメーター (オーディオアナライザー) を接続する。	HEADPHONES Rch 出力レベル: 0 dBs ± 0.1 dB	RV402 (E, 13)

(0 dBs = 0.775 Vrms)

(3) 調整後、OSC設定をOFFにする。
(メーターユニットのステータスインジケーターOSCが消灯)

2-2-4. アナログメーター出力レベル調整

ここでは工場出荷時のアナログメーター出力レベル調整について述べる。
VU METER PANEL DMBK-4003 (OPTION)やその他のメーターをコンソールのANALOG METER端子に接続して使用する際、接続したメーターの基準位置 (OVU等)の調整が必要な場合は以下の調整を行う。

使用機器、治工具 (部品)

オーディオレベルメーター (オーディオアナライザー)
D-sub, 9pin, オスコネクター

接続

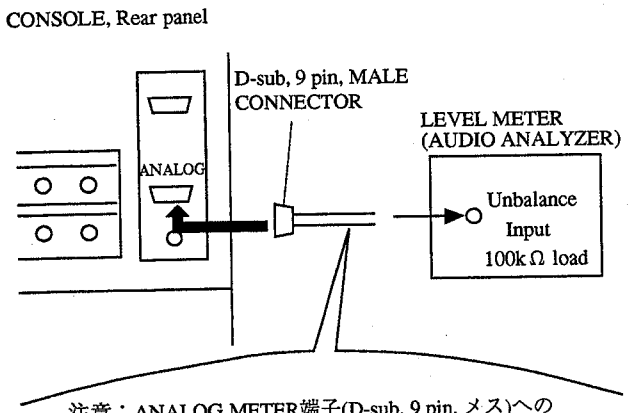

注意：ANALOG METER端子(D-sub, 9 pin, メス)への接続は、D-sub, 9 pin, オスコネクターを使用して、下記配線図に従って接続コードを作成して行う。

配線図

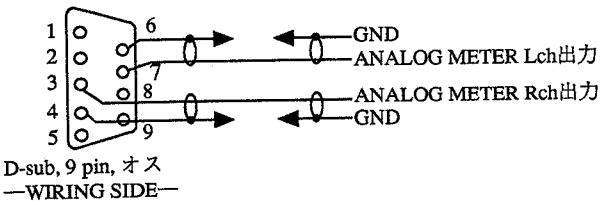

スイッチ、コントロール設定

"2-1-2. 初期設定"に同じ。

調整手順

(1) セットアップ画面のMT/OSC/TB画面を開いてOSC (内蔵オシレーターの出力) をPGM出力に設定する。(メーターユニットのステータスインジケーターOSCが点灯)

(2) 調整

規　格: ANALOG METER Lch (7番ピン) 出力レベル
= +4.0 dBs ± 0.1 dB (工場出荷時の調整)
ANALOG METER Rch (3番ピン) 出力レベル
= +4.0 dBs ± 0.1 dB (工場出荷時の調整)
または、
接続しているメーターの指示レベル
=基準位置(OVU等)

調整箇所: Lch=◐ RV501/MOA-7基板 (B, 7)
Rch=◐ RV502/MOA-7基板 (B, 8)

(3) 調整後、OSC設定をOFFにする。
(メーターユニットのステータスインジケーターOSCが消灯)

2-2-5. コミュニケーションレベル調整

ここではコンソール、COMMUNICATION端子の下記コミュニケーションの入･出力レベルを調整する。
また、COMMUNICATION端子を使用して、外部とコミュニケーションを取る際に、外部機器とのレベルが一致しない場合は、使用する外部機器を接続して、必要に応じて下記ボリュームを調整する。

変更したいコミュニケーションの入･出力レベル	調整箇所 (MOA-7A/7B基板)
トークバック1の出力レベル	◐ RV603 (L, 7)
トークバック2の出力レベル	◐ RV604 (L, 7)
トークバック3の出力レベル	◐ RV605 (M, 7)
トークバック1のスタジオモニターへの割り込みレベル	◐ RV606 (M, 7)
内蔵トークバックマイクと外部トークバックマイク入力のレベルバランス	内蔵マイク: ◐ RV601 (J, 8) 外部トークバックマイク: ◐ RV602 (J, 7)
インカムレシーブ1入力のスピーカレベル	◐ RV701 (H, 6)
インカムレシーブ2入力のスピーカレベル	◐ RV702 (H, 6)
DMBK-4012 (オプション) からのリバーストークバックレベル	◐ RV703 (J, 6)
インカムレシーブ1入力などのヘッドホンへの割り込みレベル	◐ RV704 (G, 6)
DMBK-4012 (オプション) からのナレーションモニターレベル	◐ RV705 (E, 8)

以下は、工場出荷時の調整 (設定) について述べる。

使用機器、治工具 (部品)

オーディオレベルメーター (オーディオアナライザー)
オーディオオシレーター (オーディオアナライザー)

D-sub, 37ピン、オスコネクター: 1
D-sub, 15ピン、オスコネクター: 1

スイッチ、コントロール設定

"2-1-2. 初期設定"に同じ。

接続

調整項目ステップ1から9

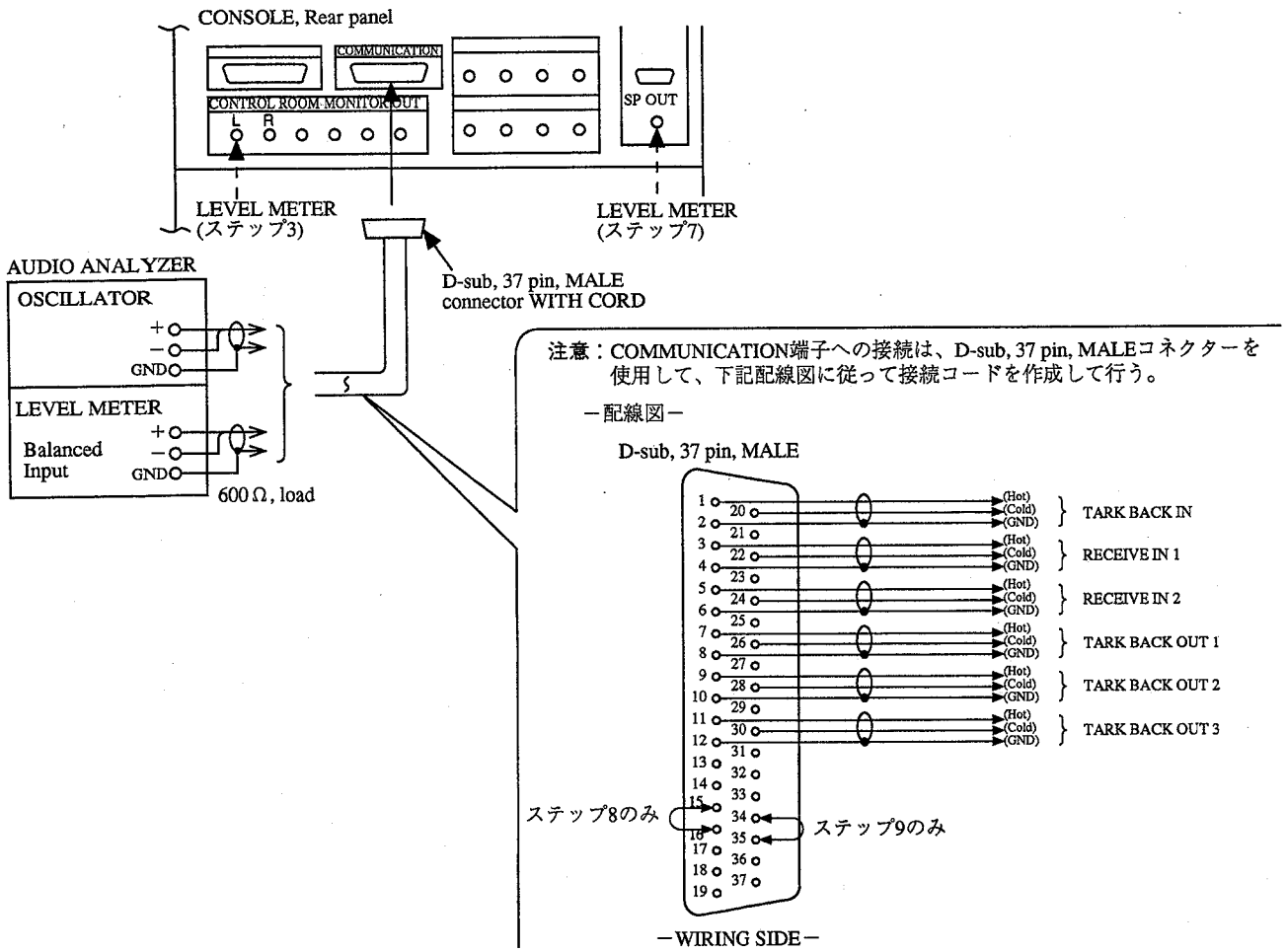

調整項目ステップ10, 11

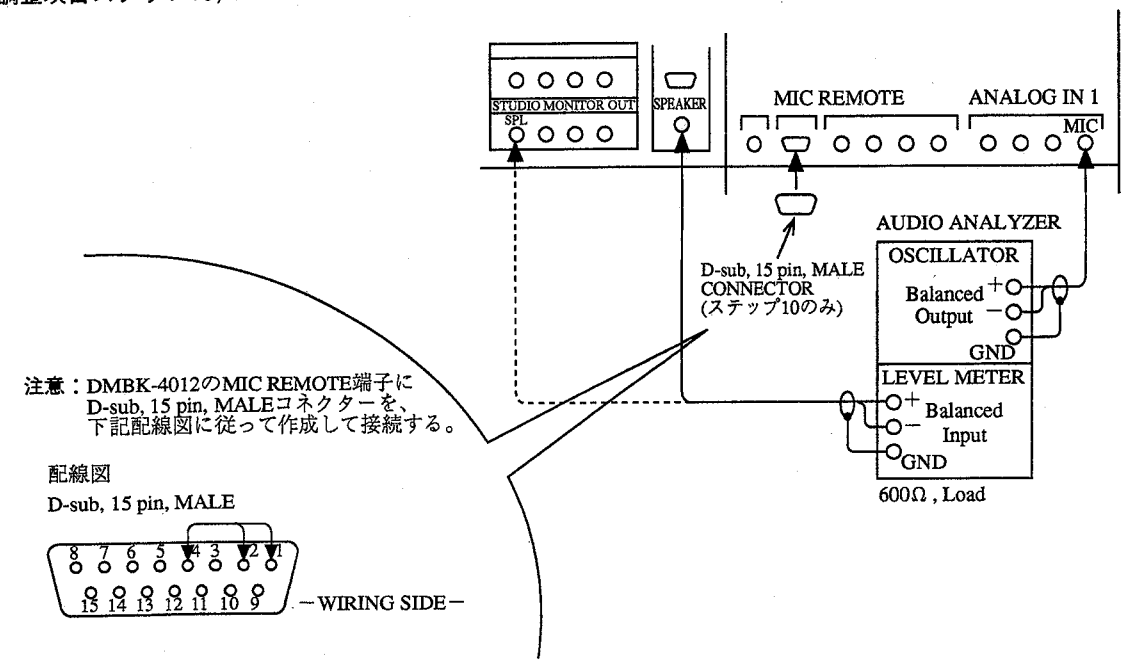

調整手順

注意: 1. 調整は、ステップ順に行う。
2. ステップ10, 11の調整は、DMBK-4012 (OPTION)
が装着されていることを条件とする。

調整項目	調整時の状態	規格	調整箇所 (MOA-7A/7B基板)
ステップ1 トークバックアウト1の出力レベル調整	・RV601 (J, 8) を時計方向に回しきる。 ・RV602 (J,7) を時計方向に回しきる。 ・SEND1 スイッチ (マスター操作パネル、コンソール) をONにする。 ・COMMUNICATIONコネクターのTALK BACK IN (1番ピン:HOT/20番ピン:Cold/2番ピン:GND) にオシレーター (オーディオアナライザー) より1 KHz, +4 dBsのバランス信号を入力する。 ・COMMUNICATIONコネクターのTALK BACK OUT 1 (7番ピン:HOT/26番ピン:Cold/8番ピン:GND) にレベルメーター (オーディオアナライザー) を接続する。	トークバックアウト1の出力レベル: +24.0 dBs ± 0.1 dB	RV603 (L, 7)
ステップ2 外部トークバックマイクのミックスレベル調整	・ステップ1に同じ。	トークバックアウト1の出力レベル: +14.0 dBs ± 0.1 dB	RV602(J, 7)
ステップ3 スタジオトークバックの出力レベル調整	・RV601 (J, 8) を時計方向に回しきる。 ・SEND1 スイッチ (マスター操作パネル、コンソール) をONにする。 ・COMMUNICATIONコネクターのTALK BACK IN (1番ピン:HOT/20番ピン:Cold/2番ピン:GND) にオシレーター (オーディオアナライザー) より 1 KHz, +4 dBsのバランス信号を入力する。 ・STUDIO MONITOR OUT SP-L コネクター (コンソール、リアパネル) にレベルメーター (オーディオアナライザー) を接続する。	STUDIO MONITOR OUT SP-Lの出力レベル: +14.0 dBs ± 0.2 dB	RV606 (M, 7)
ステップ4 トークバックアウト2の出力レベル調整	・RV601 (J, 8) を時計方向に回しきる。 ・SEND2 スイッチ (マスター操作パネル、コンソール) をONにする。 ・COMMUNICATIONコネクターのTALK BACK IN (1番ピン:HOT/20番ピン:Cold/2番ピン:GND) にオシレーター (オーディオアナライザー) より 1 KHz, +4 dBsのバランス信号を入力する。 ・COMMUNICATIONコネクターのTALK BACK OUT 2 (9番ピン:HOT/28番ピン:Cold/10番ピン:GND) にレベルメーター (オーディオアナライザー) を接続する。	トークバックアウト2の出力レベル: +14.0 dBs ± 0.2 dB	RV604 (L, 7)

(0 dBs = 0.775 Vrms)

調整項目	調整時の状態	規格	調整箇所 (MOA-7A/7B基板)
ステップ5 トークバックアウト3の出力レベル調整	下記設定以外は、ステップ4に同じ。 ・SEND3 スイッチ (マスター操作パネル、コンソール) をONにする。 ・COMMUNICATIONコネクターのTALK BACK OUT 3 (11番ピン:HOT/30番ピン:Cold/12番ピン:GND) にレベルメーター (オーディオアナライザー) を接続する。	トークバックアウト3の出力レベル: +14.0 dBs ± 0.2 dB	RV605 (M, 7)
ステップ6 内蔵トークバックマイクのミックスレベル調整	下記設定以外は、ステップ5に同じ。 ・COMMUNICATIONコネクターのTALK BACK INを無接続にする。	・RV601をステップ2のRV602調整位置に、機械的に合わせる。 ・TALK BACK OUT 3に出力があることを確認する。	RV601 (J, 8)
ステップ7 インカムレシーブ1のミックスレベル調整	・SP LVL コントロール (マスター操作パネル、コンソール) を、MAX位置にする。 ・COMMUNICATIONコネクターのRECEIVE IN 1 (3番ピン:HOT/22番ピン:Cold/4番ピン:GND) にオシレーター (オーディオアナライザー) より1 KHz, +4 dBsのバランス信号を入力する。 ・COMMUNICATIONコネクターのRECEIVE CMD IN 1 (15番ピン) を"L"に設定する。 (15番ピンと16番ピン, GNDを接続する。) ・SPEAKER OUT コネクター (コンソール、リアパネル) にレベルメーター (オーディオアナライザー) を接続する。	SPEAKER OUTの出力レベル: +12.0 dBs ± 0.2 dB	RV701 (H, 6)
ステップ8 インカムミックスレベルの調整	・HEADPHONES コントロール (マスター操作パネル、コンソール) を、MAX位置にする。 ・COMMUNICATIONコネクターのRECEIVE IN 1 (3番ピン:HOT/22番ピン:Cold/4番ピン:GND) にオシレーター (オーディオアナライザー) より1 KHz, +4 dBsのバランス信号を入力する。 ・COMMUNICATIONコネクターのRECEIVE CMD IN 1 (15番ピン) を"L"に設定する。 (15番ピンと16番ピン, GNDを接続する。) ・HEADPHONES 端子 (マスター操作パネル、コンソール) のLch出力にレベルメーター (オーディオアナライザー) を接続する。 接続方法は、"2-2-3. HEADPHONES出力レベル調整"を参照して行う。	HEADPHONES端子、Lchの出力レベル: 0 dBs ± 0.2 dB	RV704 (G, 6)

(0 dBs = 0.775 Vrms)

調整項目	調整時の状態	規格	調整箇所 (MOA-7A/7B基板)
ステップ9 インカムレシーブ2の ミックスレベル調整	・SP LVL コントロール (マスター操作パネル、コンソール) を、MAX位置にする。 ・COMMUNICATIONコネクターのRECEIVE IN 2 (5番ピン:HOT/24番ピン:Cold/6番ピン:GND) にオシレーター (オーディオアナライザー) より1 KHz, +4 dBsのバランス信号を入力する。 ・COMMUNICATIONコネクターのRECEIVER CMD IN 2 (34番ピン) を"L"に設定する。 (34番ピンと35番ピン, GNDを接続する。) ・SPEAKER OUT コネクター (コンソール、リアパネル) にレベルメーター (オーディオアナライザー) を接続する。	SPEAKER OUTの 出力レベル: +12.0 dBs ± 0.2 dB	RV702 (H, 6)
ステップ10 リバーストーク バックのミックス レベル調整	・DMBK-4012, ANALOG IN 1パネル (コンソール、リアパネル) のMICコネクターに、オシレーター (オーディオアナライザー) より1 KHz, −30 dBsのバランス信号を入力する。 ・DMBK-4012, ANALOG IN 1パネル (コンソール、リアパネル) のMIC REMOTEコネクターの REVERSE TALK BACK CMD IN 1 (2ピン) および MIC ON CMD IN 1 (1ピン) を"L"に設定する。 (1番ピンと2番ピンを4番ピン, GNDに接続する。) ・SPEAKER OUT コネクター (コンソール、リアパネル) にレベルメーター (オーディオアナライザー) を接続する。	SPEAKER OUTの 出力レベル: +12.0 dBs ± 0.1 dB	RV703 (J, 6)
ステップ11 ナレーションモニター のミックスレベル 調整	・セットアップ画面のNARRATION SOURCE/ PFL LOGIC画面を選択して、NARRATION SOURCEを選択する。 ・DMBK-4012, ANALOG IN 1パネル (コンソール、リアパネル) のMICコネクターに、オシレーター (オーディオアナライザー) より1 KHz, −30 dBsのバランス信号を入力する。 ・STUDIO MONITOR OUT SPL (コンソール、リアパネル) にレベルメーター (オーディオアナライザー) を接続する。	STUDIO MONITOR OUT SPLの出力レベル: +4.0 dBs ± 0.1 dB	RV705 (E, 8)

(0 dBs = 0.775 Vrms)

2-3. PLL調整 (CPU-164基板、DMX-B4008 プロセッサー)

ここでは、システム全体のサンプリング周波数の基になるPLL調整を行う。

使用機器、治工具

周波数カウンター

延長基板 EX-360: ソニー部品番号 J-6400-050-A

準備

(1) CPU-164基板を延長基板EX-360で延長する。

(2) プロセッサーのREF VIDEO入力端子を無接続にする。

接続

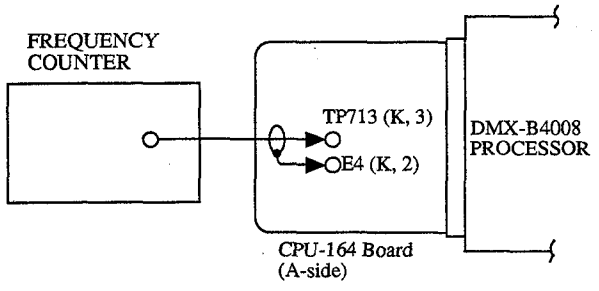

スイッチ、コントロール設定

"2-1-2. 初期設定"に同じ。

調整箇所

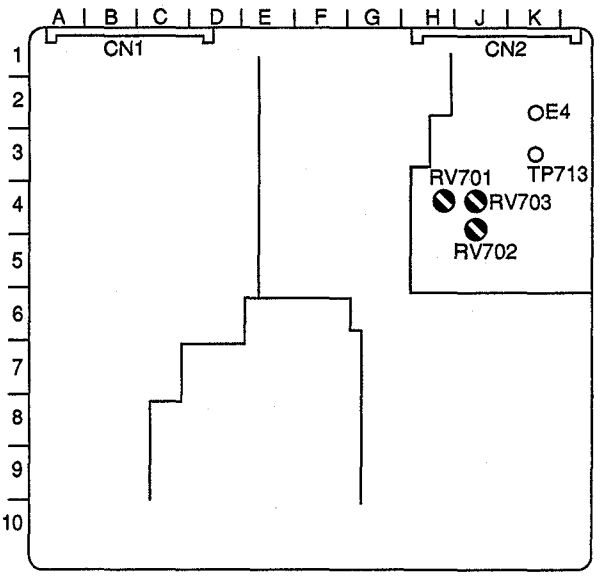

CPU-164 BOARD (A-side)

調整手順

(1) 周波数カウンターをTP713/CPU-164 (K, 3), E4/CPU-164 (K, 2) に接続する。

(2) SYSTEM CLOCK設定スイッチS501-1, 2, 3/CPU-164を下記の設定にしたときに、TP713の周波数が下記規格になるようにRV701, 702, 703を調整する。

S501			サンプリング周波数	規格	調整箇所 (CPU-164基板)
-1	-2	-3			
ON	OFF	OFF	48.0 kHz	4.8000 MHz±40 Hz	RV701 (H,4)
OFF	ON	OFF	44.1 kHz	4.4100 MHz±40 Hz	RV702 (J,4)
OFF	OFF	ON	44.056 kHz	4.4056 MHz±40 Hz	RV703 (J,4)

2-4. DAコンバーターレベル調整1 (DIO-26基板、DMX-B4008プロセッサー)

ここでは、CONTROL ROOM MONITORおよびSTUDIO MONITORのDAコンバーター調整を行う。

使用機器、治工具

オーディオレベルメーター (オーディオアナライザー)
延長基板 EX-360: ソニー部品番号 J-6400-050-A
Dsub-XLR変換ケーブル: ソニー部品番号 J-6401-180-A

準備

- DIO-26基板を延長基板EX-360で延長する。
- プロセッサーのCONSOLE AUDIO端子に接続されているケーブルを外し、Dsub-XLR変換ケーブルを接続する。

スイッチ、コントロール設定

"2-1-2. 初期設定"に同じ。

調整箇所

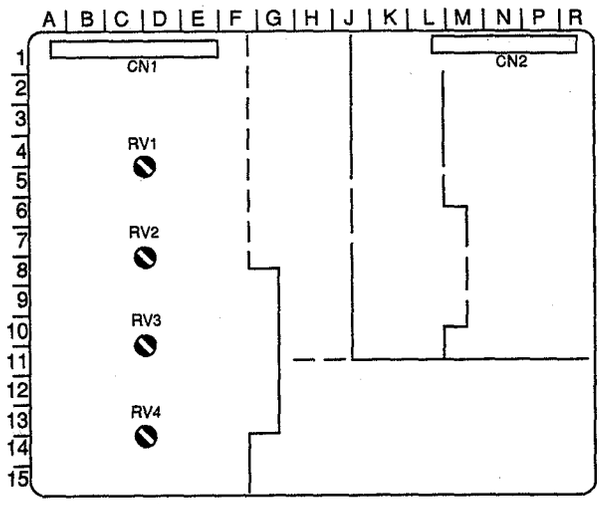

DIO-26 BOARD (A-side)

接続

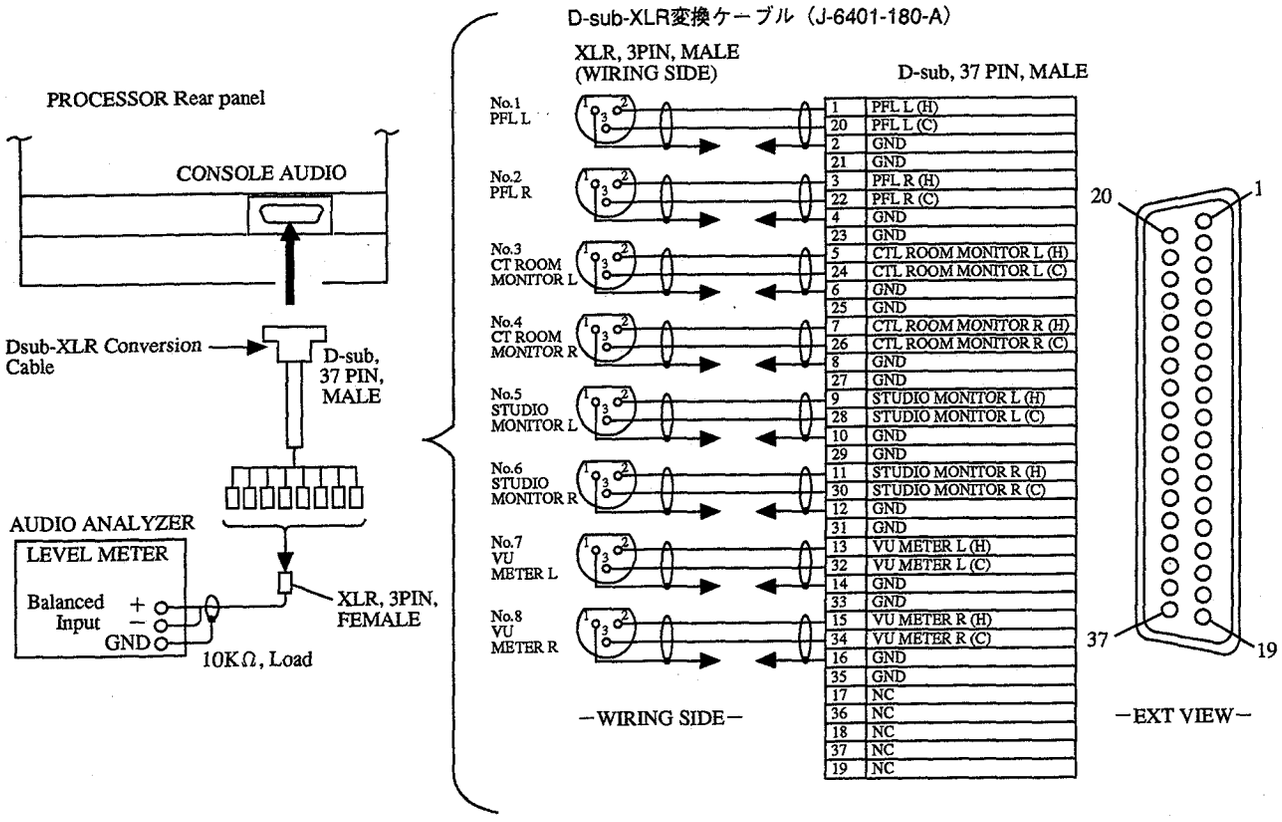

調整手順

(1) セットアップ画面のMT/OSC/TB画面を開いて、OSC (内部オシレーターの出力) をPGM出力に設定する。
(メーターユニットのステータスインジケーターOSCが点灯)

(2) 調整

調整項目	調整時の状態	規格	調整箇所 (DIO-26基板)
CONTROL ROOM MONITOR L コンバーターレベル調整	Dsub-XLR変換ケーブルのNo. 3ケーブル (CTL RM MONITOR L) をオーディオレベルメーターに接続する。	DAコンバーターレベル: +4.0 dBs ±0.1 dB	RV1 (D,9)
CONTROL ROOM MONITOR R コンバーターレベル調整	Dsub-XLR変換ケーブルのNo. 4ケーブル (CTL RM MONITOR R) をオーディオレベルメーターに接続する。	DAコンバーターレベル: +4.0 dBs ±0.1 dB	RV2 (D,7)
STUDIO MONITOR L コンバーターレベル調整	Dsub-XLR変換ケーブルのNo. 5ケーブル (STUDIO MONITOR L) をオーディオレベルメーターに接続する。	DAコンバーターレベル: +4.0 dBs ±0.1 dB	RV3 (D,10)
STUDIO MONITOR R コンバーターレベル調整	Dsub-XLR変換ケーブルのNo. 6ケーブル (STUDIO MONITOR R) をオーディオレベルメーターに接続する。	DAコンバーターレベル: +4.0 dBs ±0.1 dB	RV4 (D,13)

(0 dBs = 0.775 Vrms)

(3) 調整後、OSCの設定をOFFにする。
(メーターユニットのステータスインジケーターOSCが消灯)

2-5. DAコンバーターレベル調整2 (CN-837基板、DMX-B4008プロセッサー)

ここでは、PFLのDAコンバーターレベルの調整を行う。

使用機器、治工具

オーディオレベルメーター (オーディオアナライザー)
Dsub-XLR変換ケーブル: ソニー部品番号 J-6401-180-A

準備

プロセッサーのCONSOLE AUDIO端子に接続されているケーブルを外し、Dsub-XLR変換ケーブルを接続する。

接続

"2-2-5. コミュニケーション レベル調整"に同じ。

スイッチ、コントロール設定

"2-1-2. 初期設定"に同じ。

調整手順

(1) セットアップ画面のMT/OSC/TB画面を開いてOSC (内部オシレーターの出力) をPGM出力に設定する。
(メーターユニットのステータスインジケーターOSCが点灯)

(2) チャンネル操作パネルのCH1チャンネル操作ブロックのPFLスイッチをONにする。
(メーターユニットのステータスインジケーターPFLが点灯)

(3) 調整

調整箇所

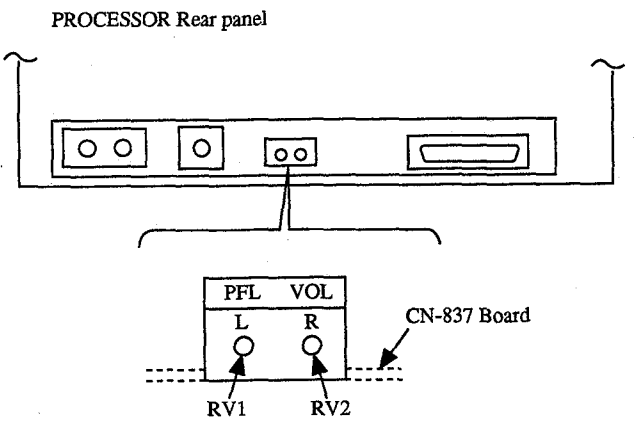

調整項目	調整時の状態	規格	調整箇所 (CN-873基板)
PFL L コンバーターレベル調整	Dsub-XLR変換ケーブルのNo. 1ケーブル (PFL L) をオーディオレベルメーターに接続する。	コンバーターレベル出力: +4.0 dBs±0.1dB	RV1 調整はリアパネルの調整孔より行う。
PFL R コンバーターレベル調整	Dsub-XLR変換ケーブルのNo. 2ケーブル (PFL R) をオーディオレベルメーターに接続する。	コンバーターレベル出力: +4.0 dBs±0.1dB	RV2 調整はリアパネルの調整孔より行う。

(0 dBs = 0.775 Vrms)

(4) 調整後、OSCの設定をOFFにする。
(メーターユニットのステータスインジケーターOSCが消灯)

2-6. CPU-144基板調整 (DMX-B4016 プロセッサー)

使用機器、治工具

周波数カウンター
オーディオレベルメーター (オーディオアナライザー)
延長基板 EX-455: ソニー部品番号 J-6401-190-A
Dsub-XLR変換ケーブル: ソニー部品番号 J-6401-180-A

準備

CPU-144基板を延長基板EX-455で延長する。

2-6-1. PLL調整

ここでは、システム全体のサンプリング周波数の基になるPLL調整を行う。

接続

注意: プロセッサーのREF VIDEO INPUT端子を無接続とする。

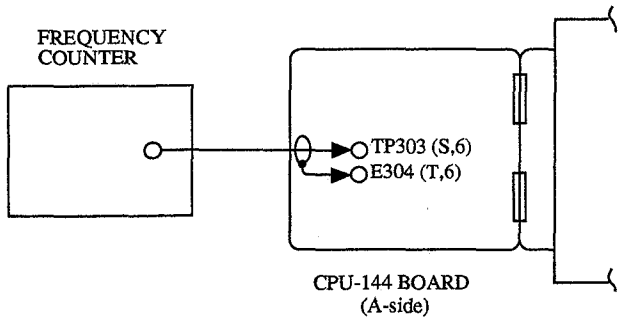

調整手順

(1) 周波数カウンターをTP303/CPU-144 (S, 6), E304/CPU-144 (T, 6) に接続する。
(2) SYSTEM CLOCK設定スイッチS501-1, 2, 3/CPU-144を下記の設定にしたときに、TP303の周波数が下記規格になるようにRV301、302、303を調整する。

S501			サンプリング周波数	規格	調整箇所 (CPU-144基板)
-1	-2	-3			
ON	OFF	OFF	48.0 kHz	4.8000 MHz±40 Hz	RV303 (T4)
OFF	ON	OFF	44.1 kHz	4.4100 MHz±40 Hz	RV302 (T5)
OFF	OFF	ON	44.056 kHz	4.4056 MHz±40 Hz	RV301 (T4)

調整箇所

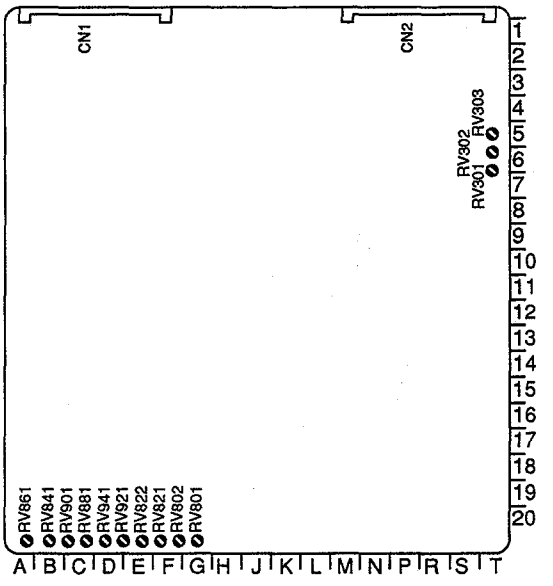

CPU-144 BOARD (A-side)

スイッチ、コントロール設定

"2-1-2. 初期設定"に同じ。

2-6-2. DAコンバーターレベル調整1

ここでは、ANALOG PGM OUTのDAコンバーター調整を行う。

接続

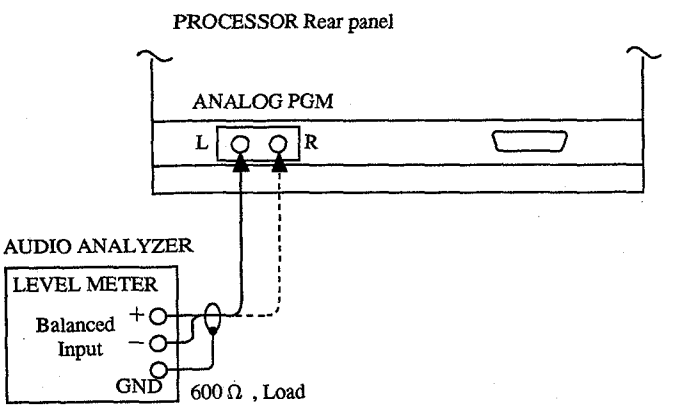

スイッチ、コントロール設定

"2-1-2. 初期設定"に同じ。

調整手順

(1) セットアップ画面のMT/OSC/TB画面を開いてOSC (内部オシレーターの出力) をPGM出力に設定する。
(メーターユニットのステータスインジケーターOSC点灯)

(2) 調整

調整項目	調整時の状態	規格	調整箇所 (CPU-144基板)
ANALOG PGM L DAコンバーターレベル調整	オーディオレベルメーター (オーディオアナライザー) ANALOG PGM Lコネクターに接続する。	DAコンバーター出力レベル: +4.0 dBs±0.1dB	◐ RV801 (F,20)
ANALOG PGM R DAコンバーターレベル調整	オーディオレベルメーター (オーディオアナライザー) ANALOG PGM Rコネクターに接続する。	DAコンバーター出力レベル: +4.0 dBs±1.1dB	◐ RV821 (E,20)

(0 dBs = 0.775 Vrms)

(3) 調整後、OSCの設定をOFFにする。
(メーターユニットのステータスインジケーターOSC消灯)

2-6-3. DAコンバーターレベル調整2

ここでは、コンソールへ送出するアナログ信号(CONTROL, STUDIO MONITOR等) のDAコンバーターレベル調整を行う。

準備

プロセッサーのCONSOLE AUDIO端子に接続されているケーブルを外し、Dsub-XLR変換ケーブルを接続する。

調整手順

(1) セットアップ画面のMT/OSC/TB画面を開いてOSC (内部オシレーターの出力) をPGM出力に設定する。
(メーターユニットのステータスインジケーターOSCが点灯)

(2) チャンネル操作パネルのCH1チャンネル操作ブロックのPFLスイッチをONにする。
(メーターユニットのステータスインジケーターPFLが点灯)

(3) 調整

調整項目	調整時の状態	規格	調整箇所 (CPU-144基板)
VU METER L DAコンバーターレベル調整	Dsub-XLR変換ケーブルのNo. 7ケーブル (VU METER L) をオーディオレベルメーターに接続する。	DAコンバーター出力レベル: +4.0 dBs±0.1dB	RV802 (F, 20)
VU METER R DAコンバーターレベル調整	Dsub-XLR変換ケーブルのNo. 8ケーブル(VU METER R) をオーディオレベルメーターに接続する。	DAコンバーター出力レベル: +4.0 dBs±0.1dB	RV821 (E, 20)
CONTROL ROOM MONITOR L DAコンバーターレベル調整	Dsub-XLR変換ケーブルのNo. 3ケーブル (CTL RM MONITOR L) をオーディオレベルメーターに接続する。	DAコンバーター出力レベル: +4.0 dBs±0.1dB	RV881 (C, 20)
CONTROL ROOM MONITOR R DAコンバーターレベル調整	Dsub-XLR変換ケーブルのNo. 4ケーブル (CTL RM MONITOR R) をオーディオレベルメーターに接続する。	DAコンバーター出力レベル: +4.0 dBs±0.1dB	RV901 (C, 20)
STUDIO MONITOR L DAコンバーターレベル調整	Dsub-XLR変換ケーブルのNo. 5ケーブル (STUDIO MONITOR L) をオーディオレベルメーターに接続する。	DAコンバーター出力レベル: +4.0 dBs±0.1dB	RV921 (D, 20)
STUDIO MONITOR R DAコンバーターレベル調整	Dsub-XLR変換ケーブルのNo. 6ケーブル (STUDIO MONITOR R) をオーディオレベルメーターに接続する。	DAコンバーター出力レベル: +4.0 dBs±0.1dB	RV941 (D, 20)
PFL L DAコンバーターレベル調整	Dsub-XLR変換ケーブルのNo. 1ケーブル (PFL L) をオーディオレベルメーターに接続する。	DAコンバーター出力レベル: +4.0 dBs±0.1dB	RV841 (B, 20)
PFL R DAコンバーターレベル調整	Dsub-XLR変換ケーブルのNo. 2ケーブル (PFL R) をオーディオレベルメーターに接続する。	DAコンバーター出力レベル: +4.0 dBs±0.1dB	RV861 (B, 20)

(0 dBs = 0.775 Vrms)

(4) 調整後、OSCの設定をOFFにする。
(メーターユニットのステータスインジケーターOSC消灯)

接続

"2-2-5. コミュニケーション レベル調整"に同じ。

スイッチ、コントロール設定

"2-1-2. 初期設定"に同じ。

2-7. AD-100基板調整 (DMBK-4012 装着時)

ここでは、DMBK-4012のMICアンプ、LINEアンプ、INSERT SEND/RETURNアンプおよびDAコンバーターの調整を行う。

準備

本調整は、下記作業を行った後行う。
作業はコンソールの電源をOFFにして行う。

(1) 調整するDMBK-4012のAD-100基板をコンソールより外す。
(外し方はMAINTENANCE MANUAL Part1 "2-12. DMBK-4012 20BIT MIC/LINE INPUT MODULEの取り付け"を参照して行う。)
(2) 外したAD-100基板 (A-side) のシールド板を外す。
(3) AD-100基板 (シールド板を外した状態) をコンソールに装着する。(ハーネスは接続されていること)
(4) 調整するAD-100基板の装着されたチャンネルフレーム (コンソール) のチャンネルパネルASSY (ハーネスは接続したままの状態) を外し、AD-100基板が調整できる状態にする。

使用機器

オーディオオシレーター (オーディオアナライザー)
オーディオレベルメーター (オーディオアナライザー)
DC電圧計 (またはテスター)

調整箇所

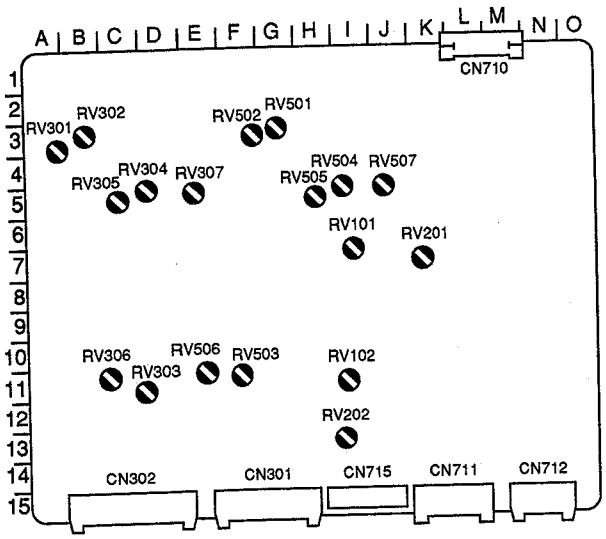

AD-100 BOARD (A-side)

2-7-1. MICアンプ調整

使用機器

オーディオオシレーター (オーディオアナライザー)
オーディオアナライザー (オーディオアナライザー)

接続

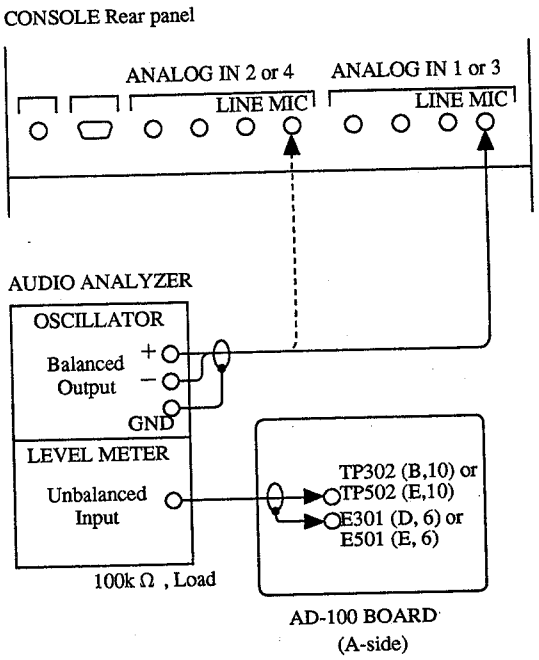

スイッチ、コントロール設定

"2-1-2. 初期設定"に同じ。

調整

- 下記調整をSTEP順に行う。
- STEP2, 3および6, 7は繰り返し2回行う。

STEP	調整項目	調整時の状態	規格	調整箇所 (AD-100基板)
1	MIC1入力レベル調整	・MIC IN1 (ANALOG IN1 (or 3)) コネクターにオーディオオシレーターより1 kHz, −30 dBsの信号を入力する。 ・オーディオレベルメーターをAD-100基板の下記箇所に接続する。 TP302 (B, 10) E301 (D, 6) (GND)	TP302 (B, 10) のレベル: −6.0 dBs±0.1 dB	RV303 (D, 11)
2	MIC1 CMRR High Freq. (高域) 調整 注意: STEP2, 3は2回繰り返し行う	・STEP1に同じ。	TP302 (B, 10) のレベル: 最小	RV302 (B, 4)
3	MIC1 CMRR Low Freq. (低域) 調整	・STEP1に同じ。 ただし、オーディオオシレーターの信号を60 Hz, −30 dBsとする。	TP302 (B, 10) のレベル: 最小	RV301 (B, 3)
4	MIC1 ピークインジケーター調整	・MIC IN1コネクターにオーディオオシレーターより1 kHz, −21 dBの信号を入力する。	HA PANEL (DMBK-4012) PKインジケーター: 点灯	RV306 (C, 4)
5	MIC2入力レベル調整	・MIC IN2 (ANALOG IN2 (or 4)) コネクターにオーディオオシレーターより1 kHz, −30 dBsの信号を入力する。 ・オーディオレベルメーターをAD-100基板の下記箇所に接続する。 TP502 (E, 10) E501 (E, 6) (GND)	TP502 (B, 10) のレベル: −6.8 dBs±0.1 dB	RV503 (F, 11)
6	MIC2 CMRR High Freq. (高域) 調整 注意: STEP6, 7は2回繰り返し行う	・STEP5に同じ。	TP502 (E, 10) のレベル: 最小	RV502 (F, 4)
7	MIC2 CMRR Low Freq. (低域) 調整	・STEP5に同じ。 ただし、オーディオオシレーターの信号を60 Hz, −30 dBsとする。	TP502 (E, 10) のレベル: 最小	RV501 (G, 3)
8	MIC2 ピークインジケーター調整	・MIC IN2コネクターにオーディオオシレーターより1 kHz, −21 dBの信号を入力する。	HA PANEL (DMBK-4012) PKインジケーター: 点灯	RV506 (E, 11)

(0 dBs = 0.775 Vrms)

2-7-2. LINEアンプ調整

使用機器

オーディオオシレーター (オーディオアナライザー)
オーディオレベルメーター (オーディオアナライザー)

スイッチ、コントロール設定

下記設定以外は"2-1-2. 初期設定"に同じ。
HAパネル (DMBK-4012)
LINEスイッチ: ON

接続

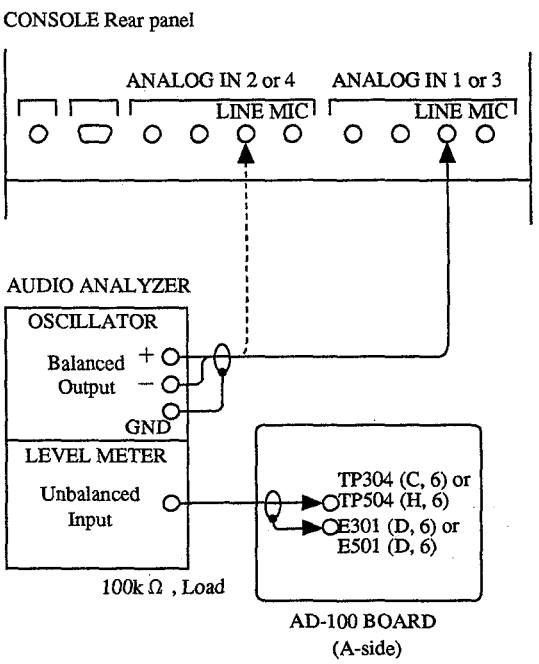

調整

STEP	調整項目	調整時の状態	規格	調整箇所 (AD-100基板)
1	LINE1入力レベル調整	・LINE IN1 (ANALOG IN1 (or 3) パネル) コネクターにオーディオオシレーターより 1 kHz, −30 dBsの信号を入力する。 ・オーディオレベルメーターをAD-100基板の下記箇所に接続する。 TP304(C, 6) E301(D, 6) (GND)	TP304 (C, 6) のレベル: −6.0 dBs±0.1 dB	◐ RV305 (C, 6)
2	LINE2入力レベル調整	・LINE IN2 (ANALOG IN2 (or 4) パネル) コネクターにオーディオオシレーターより 1 kHz, −30 dBsの信号を入力する。 ・オーディオレベルメーターをAD-100基板の下記箇所に接続する。 TP504 (H, 6) E501 (D, 6) (GND)	TP504 (H, 6) のレベル: −6.0 dBs±0.1 dB	◐ RV505 (H, 6)

(0 dBs = 0.775 Vrms)

2-7-3. INSERTION SEND/RETURNアンプ調整

使用機器

オーディオオシレーター (オーディオアナライザー)
オーディオ レベルメーター (オーディオアナライザー)

スイッチ、コントロール設定

下記設定以外は"2-1-2. 初期設定"に同じ。
HAパネル (DMBK-4012)
LINEスイッチ: ON (1, 2共)
INSスイッチ: ON (1, 2共)

接続

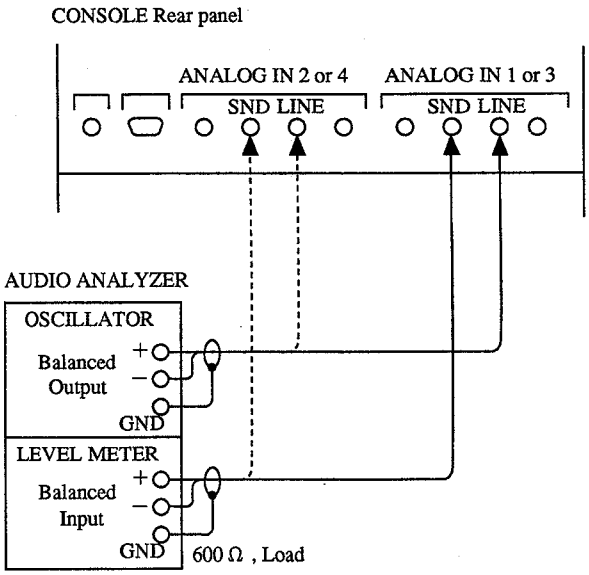

調整

調整はSTEPの番号順に行う。

STEP	調整項目	調整時の状態	規格	調整箇所 (AD-100基板)
1	SEND1レベル調整	・LINE IN1 (ANALOG IN1 (or 3) パネル) コネクターにオーディオオシレーターより 1 kHz, +4dBsの信号を入力する。 ・オーディオレベルメーターをSND1 (ANALOG IN1) コネクターに接続する。	SEND1出力レベル: +4.0 dBs±0.1 dB	RV304 (D, 5)
2	SEND2レベル調整	・LINE IN2 (ANALOG IN2 (or 4) パネル) コネクターにオーディオオシレーターより 1 kHz, +4dBsの信号を入力する。 ・オーディオレベルメーターをSND2 (ANALOG IN2) コネクターに接続する。	SEND2出力レベル: +4.0 dBs±0.1 dB	RV505 (I, 5)
3	RETURN1レベル調整	・RTN1 (ANALOG IN1 (or 3) パネル) コネクターにオーディオオシレーターより1 kHz, +4 dBs の信号を入力する。 ・オーディオレベルメーターをAD-100基板の下記箇所に接続する。 TP305 (E, 5) E301 (D, 6), GND	TP305のレベル: −6.0 dBs±0.1 dB	RV307 (E, 5)
4	RETURN2レベル調整	・RTN2 (ANALOG IN2 (or 4) パネル) コネクターにオーディオオシレーターより1 kHz, +4 dBs の信号を入力する。 ・オーディオレベルメーターをAD-100基板の下記箇所に接続する。 TP505 (J, 5) E501 (D, 6), GND	TP505のレベル: −6.0 dBs±0.1 dB	RV507 (J, 5)

(0 dBs = 0.775 Vrms)

2-7-4. DAコンバーターレベル調整

使用機器

オーディオレベルメーター (オーディオアナライザー)
テスター (DC電圧計)
接続ケーブル (デジタルオーディオ用ECD-3C/10C/30C)

スイッチ、コントロール設定

下記設定以外は"2-1-2. 初期設定"に同じ。
コンソール
HAパネル (DMBK-4012)
INSスイッチ: ON

接続

DIGITAL OUT (DMBK-4012リアパネル) の出力をプロセッサーのデジタルINPUT1に入力する。

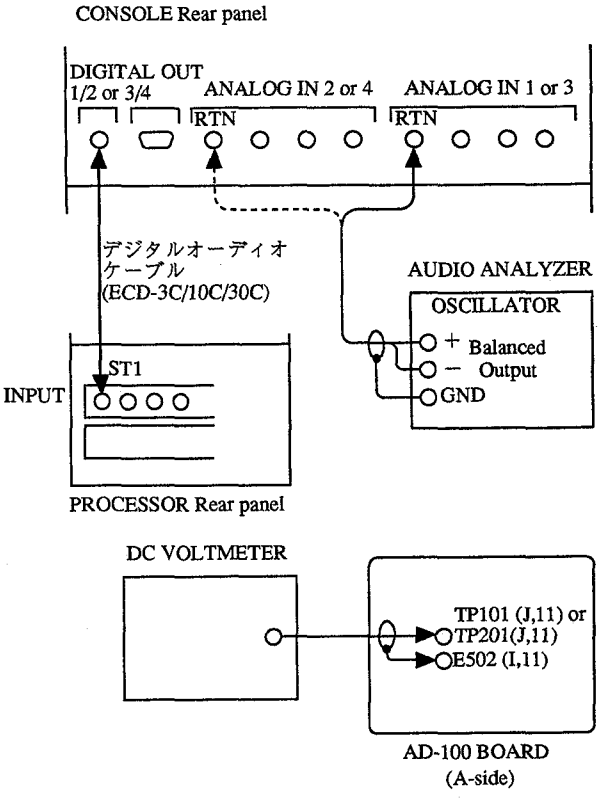

調整

STEP	調整項目	調整時の状態	規格	調整箇所 (AD-100基板)
1	Lch DCオフセット調整	・RTN1(ANALOG IN1 (or 3) パネル) コネクターを無接続にする。 ・DC電圧計をAD-100基板の下記箇所に接続する。 TP101 (J, 11) E502 (I, 11), GND	オフセット電圧: 最小	RV102 (I,12)
2	Lch DA コンバーターレベル調整	・RTN1 (ANALOG IN1 (or 3) パネル) コネクターにオーディオオシレーターより1 kHz, +24 dBs の信号を入力する。	メーターユニット: PFLバーグラフメーターのOVER表示が消灯	RV101 (I, 7)
3	Rch DCオフセット調整	・RTN2 (ANALOG IN2 (or 4) パネル) コネクターを無接続にする。 ・DC電圧計をAD-100基板の下記箇所に接続する。 TP201 (J, 11) E502 (I, 11)	オフセット電圧: 最小	RV202 (I, 14)
4	Rch DA コンバーターレベル調整	・RTN2 (ANALOG IN2 (or 4) パネル) コネクターにオーディオオシレーターより1 kHz, +24 dBs の信号を入力する。	メーターユニット: PFLバーグラフメーターのOVER表示が消灯	RV201 (K, 8)

(0 dBs = 0.775 Vrms)

SECTION 1
SERVICE OVERVIEW

1-1. SWITCHING REGULATOR REPLACEMENT

DMX-B4008/B4016 simplifies its power supply by removing redundant parts.
Therefore, when replacing the following switching regulators in the 5 V block used by the CPU, it is necessary to adjust the output voltage according to the unit.
Also perform the PLL adjustment after replacing the power supply (switching regulator) in the 5 V block of the processor.

Power supply in the 5 V block

Switching regulator needed to be adjusted (Type)	Sony parts number	Used in
FAW05-20R	1-413-915-11	· Panel Power Assy (DMX-B4008, CONSOLE) · Panel Power Assy(DMX-B4016, CONSOLE) · Back Up Power Supply (DMBK-4009, OPTION)
MRW-171-1	1-413-955-11	· Rack Power Assy (DMX-B4008, PROCESSOR) · Back Up Power Supply (DMBK-4007, OPTION)
FAW05-30R	1-413-956-11	· Rack Power Assy (DMX-B4016, PROCESSOR) · Back Up Power Supply (DMBK-4008, OPTION)

1-1-1. DMX-B4008/B4016 Console

Note: Turn off the power of the console and disconnect the power supply cord when replacing the switching regulators.

Procedure

(1) Remove the four screws (B 3x6) and remove the panel power assembly (or DMBK-4009) in the direction of the arrow.

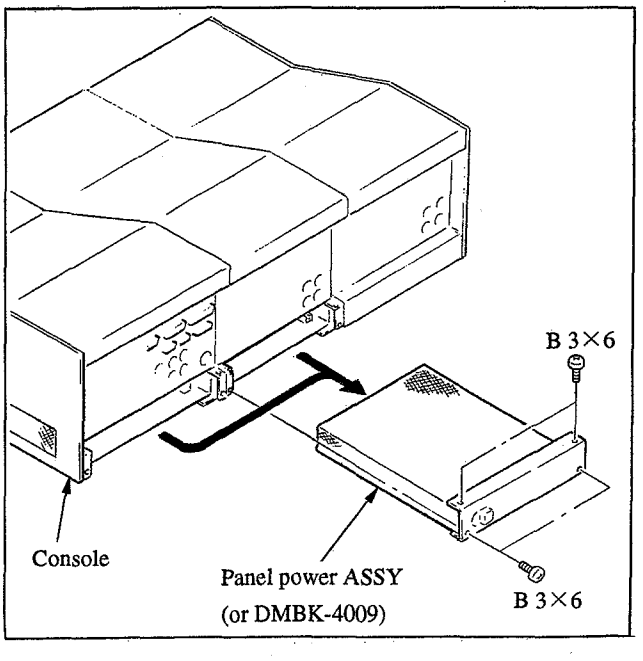

(2) Remove the seven screws (① PWH 3×6) and remove the cover of the panel power assembly (or DMBK-4009). Also remove the two screws (② B 3×6) and remove the panel.

(3) Disconnect all the harnesses connected to the switching regulator(s) to be replaced.

(4) Remove the four screws (③ PSW 3×6) and remove the switching regulator (when replacing FAW05-20R).

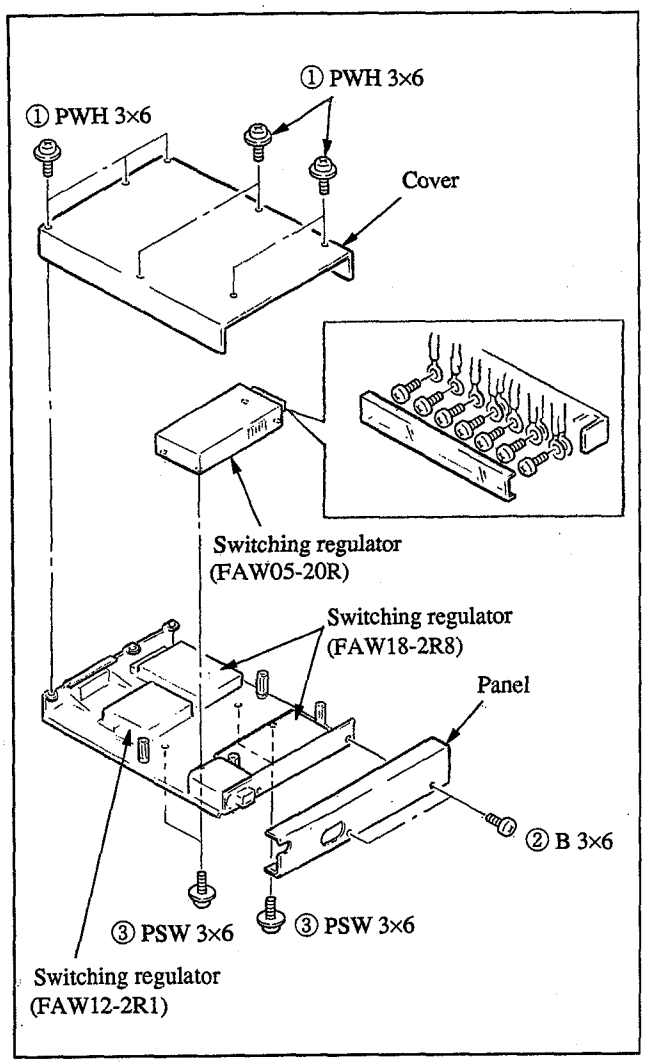

(5) Attach the new switching regulator(s) to the panel power assembly (or DMBK-4009). When the following switching regulator is replaced, adjust the output voltage as follows:

Switching regulator:

FAW05-20R (Sony parts number 1-413-915-11)

Output voltage adjustment

Equipment required: Volt-ohm-milliammeter (Multi meter)

Tool: Power supply extender (for console)
Sony parts number J-6401-170-A

Procedure

① Attach the power supply extender (for console) to the console and connect the panel power assembly (or DMBK-4009) to the power supply extender (for console).

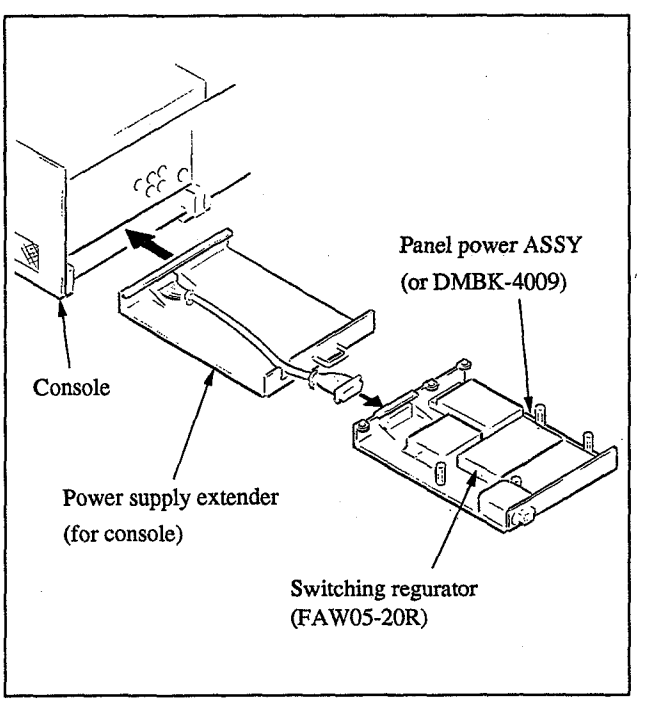

② Turn on the power of the console. Adjust the output voltage shown in the following figure to the specification below with the tester (multi meter).

Specification: Voltage between pin 1 and 4 of CN918 on the PS-312 board = +5.0 $\pm^{0.1}_{0}$ Vdc

Remove the four screws (B 3 × 6) on the console fader panel assembly and open the fader panel.

Adjustment: Adjustment VR/switching regulator (FAW05-20R)

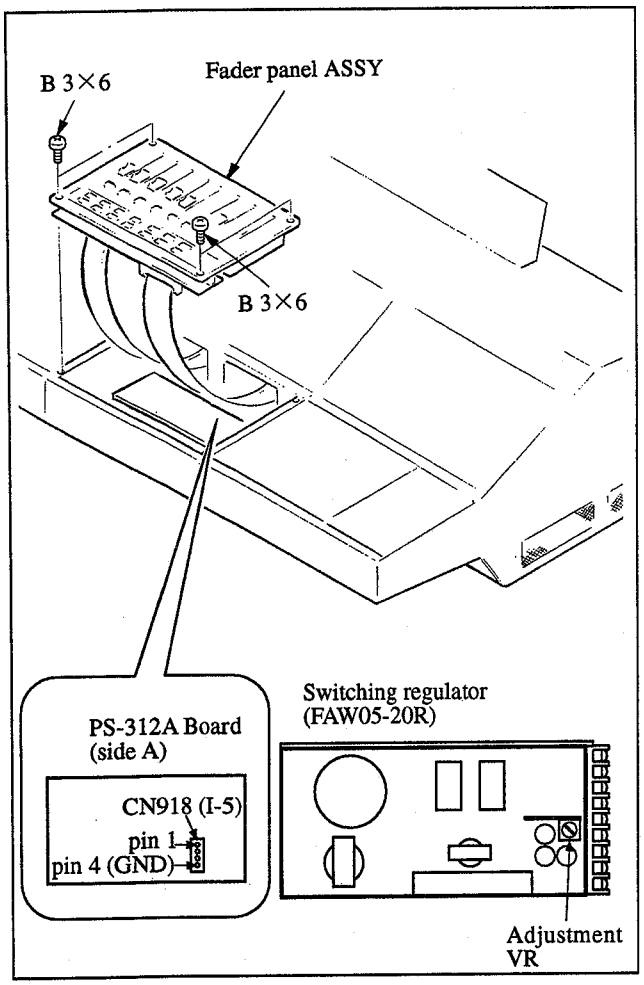

(6) After adjustment, turn off the power of the console and attach the cover to the panel power assembly (or DMBK-4009).

(7) Remove the power supply extender (for console) from the console, and perform steps 1 to 4 in reverse order to attach the panel power assembly (or DMBK-4009) to the console.

1-1-2. DMX-B4008 Processor

Note: Turn off the power of the processor and disconnect the power supply cord when replacing the switching regulator.

Procedure

(1) Open the front panel of the processor and remove the stopper.

(2) Remove the four screws (PSW 3 × 6) and remove the guard panel.

(3) Remove the two screws (PSW 3 × 6) and pull out the rack power assembly in the direction of the arrow.

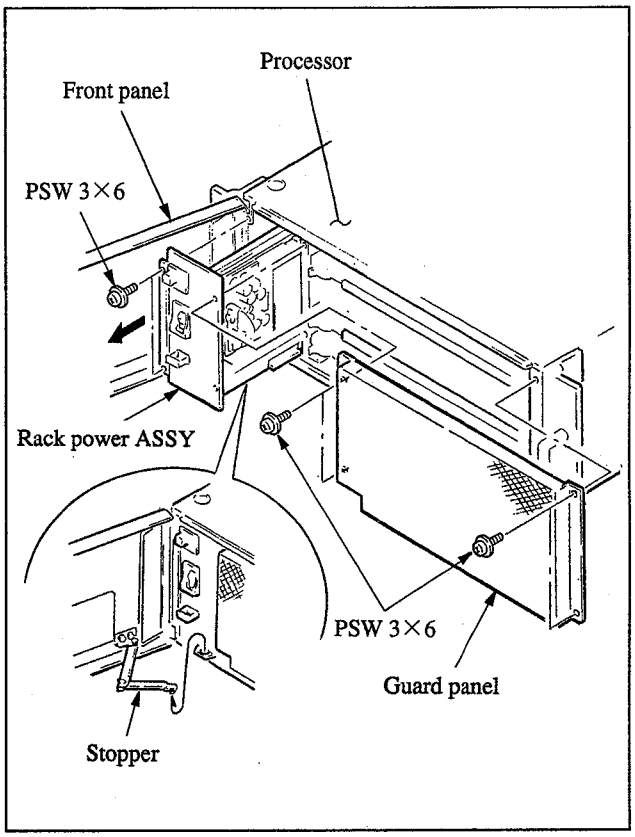

(4) Remove the three screws (PSW 3×6) and remove the SR cover.
(5) Remove the harnesses from the connectors (CN1 and CN2) on the switching regulator.
(6) Remove the four screws (two PSW 3×8 screws and two PS 3×6 screws) and remove the switching regulator (MRW-171-1) in the direction of the arrow.

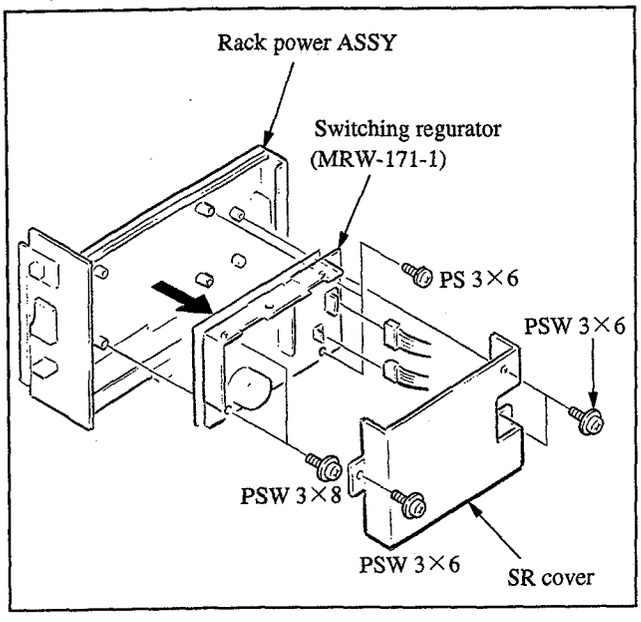

(7) Attach the new switching regulator (MRW-171-1) to the rack power assembly. After the switching regulator is attached, adjust the output voltage as follows:

Output voltage adjustment

Equipment required: Volt-ohm-milliammeter (Multi meter)

Tool: Power supply extender (for DMX-B4008 processor)
Sony parts number J-6401-160-A
Extension board EX-360
Sony parts number J-6400-050-A

Procedure

① Attach the power supply extension (for DMX-B4008 processor) to the processor and connect the rack power assembly to the power supply extender (for DMX-B4008 processor).

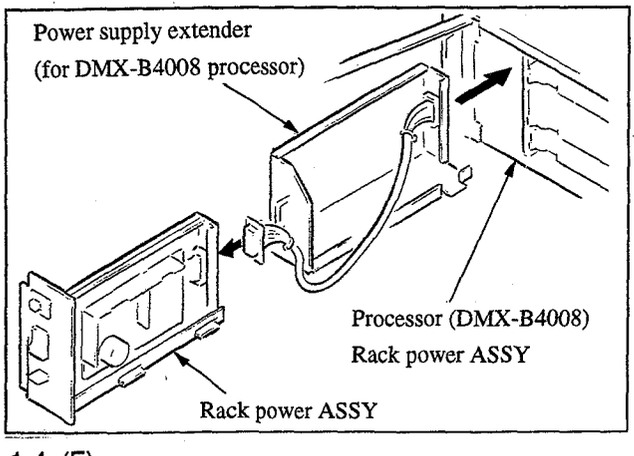

② Connect extension board EX-360 to extend the CPU-164 board (processor).
③ Turn on the power of the processor and adjust the output voltage on the CPU-164 board shown in the following figure to the specification using the tester.

Specification: Voltage between E1 (GND) and pin 29C of CN1 connector on the CPU-164 board
$= +5.0 \pm {}^{0.1}_{0}$ Vdc

Adjustment: Adjustment VR/switching regulator (MRW-171-1)

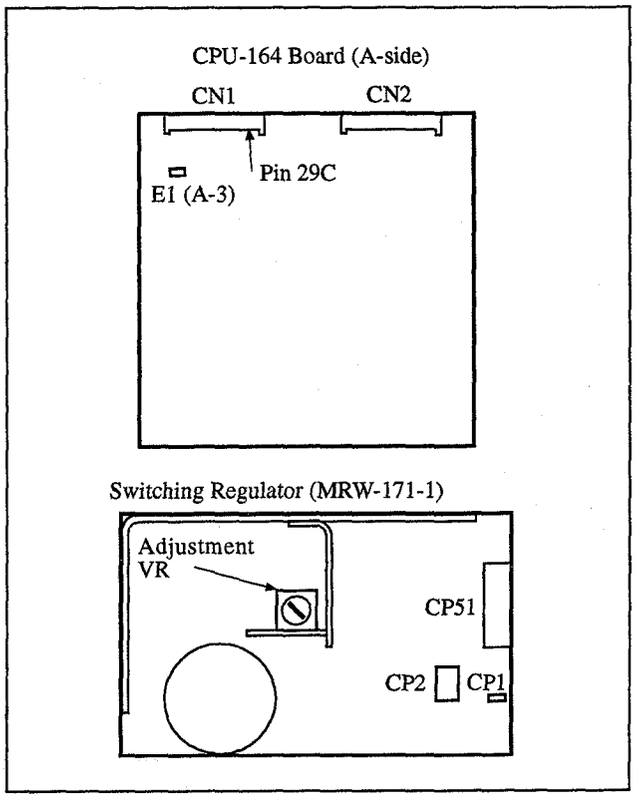

(8) After adjustment, turn off the power of the processor and remove the power supply extender (for DMX-B4008 processor) and disconnect extension board EX-360.
(9) Attach the rack power assembly (after attaching the SR cover to the switching regulator) and attach the CPU-164 board to the processor. **After the board is attached, perform "2-3. PLL ADJUSTMENT".**

1-1-3. BACK UP POWER SUPPLY DMBK-4007 (Option)

When the switching regulator (MRW-171-1) used in DMBK-4007 is replaced, perform step 7 in "1-1-2. DMX-B4008 Processor" to adjust the output voltage.
Connect DMBK-4007 to DMX-B4008 before adjustment.
After adjustment, perform "2-3. PLL ADJUSTMENT".

1-1-4. DMX-B4016 Processor (Rack Power Assembly) or BACK UP POWER SUPPLY DMBK-4008 (Option)

Note: Turn off the power of the processor and disconnect the power supply cord when replacing the switching regulators.

Procedure

(1) Open the front panel of the processor and remove the stopper.
(2) Remove the four screws (PSW 3×6) and remove the rack power assembly (or DMBK-4008) in the direction of the arrow.
(3) Remove the four canoe clips and remove the power supply cover of the rack power assembly (or DMBK-4008).

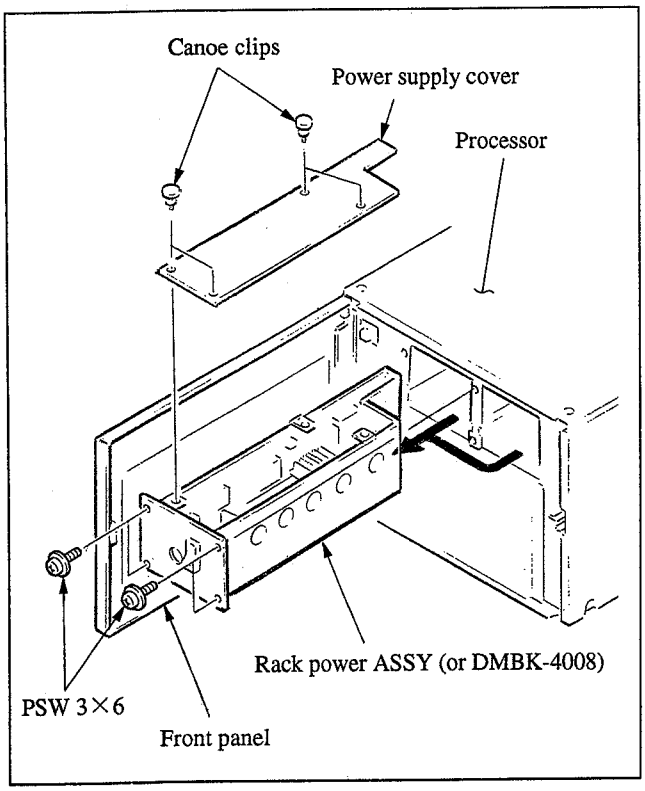

(4) Remove the 18 screws (PWH 3×6) and remove the power switch and three switching regulators from the rack power assembly (or DMBK-4008).
(5) Remove the two screws (PSW 4×8) and remove the connector of the harness from the rack power assembly (or DMBK-4008).
(6) Take out the three switching regulators from the rack power assembly (or DMBK-4008) together with the harnesses.
(7) Remove all the harnesses connected to the switching regulator(s) to be replaced.

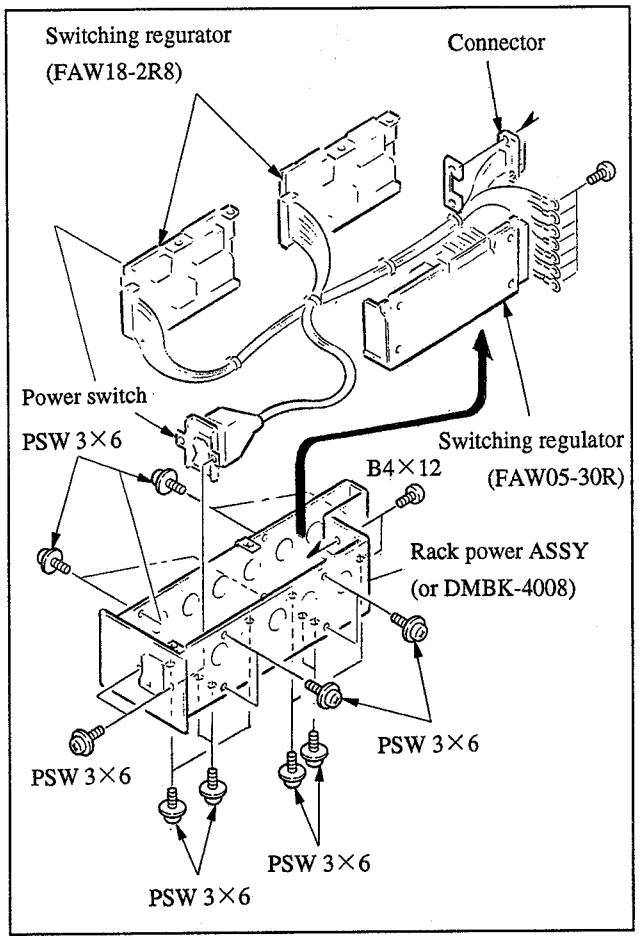

(8) Perform steps 4 to 7 in reverse order to attach the new switching regulator (s) to the rack power assembly (or DMBK-4008).
When the following switching regulator is replaced, adjust the output voltage as follows:

Switching regulator:
FAW05-30R (Sony parts number 1-413-956-11)

Output voltage adjustment

Equipment required: Volt-ohm-milliammeter (Multi meter)

Procedure

① Pull the processor out of the rack.
② Remove the processor top panel.
(Refer to "3-2. Opening, Closing and Removal of Covers" in MAINTENANCE MANUAL Part 1.)
③ Remove the four canoe clips and remove the power supply cover from the rack power assembly (or DMBK-4008).
④ Turn on the power of the processor. Adjust the output voltage on the MIX-16 board shown in the following figure to the specification using the tester.

Note: When DMBK-4010 or DMBK-4011 is installed, adjust MIX-16 board of the DMBK-4010 or DMBK-4011.

Specification: Voltage between E1 (GND) and pin 20 of IC903 on the MIX-16 board

When DMBK-4010/4011 is not installed,
Voltage = $+5.1 \pm {}^{0.1}_{0}$ Vdc

When DMBK-4010 is installed,
Voltage = $+4.9 \pm {}^{0.1}_{0}$ Vdc

When DMBK-4011 is installed,
Voltage = $+5.0 \pm {}^{0.1}_{0}$ Vdc

Adjustment: Adjustment VR/switching regulator (FAW05-30R)

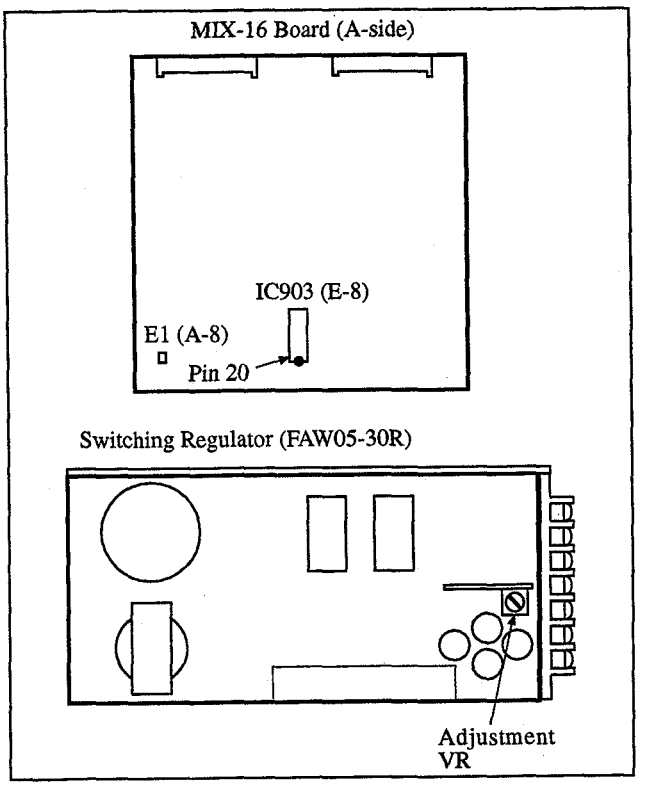

(9) Perform steps ① to ③ in reverse order to attach the rack power assembly (or DMBK-4008).
After installed the rack power assy (or DMBK-4008), perform "2-6-1. PLL Adjustment".

1-1-5. Replacing Power Supply Fuse

There are fuses on the switching regulators shown in the following table. Eliminate possible causes of shorting such as foreign objects in the unit before replacing the fuses.

Note: Turn off the power and disconnect the power supply cord before replacing the fuses. Refer to sections 1-1-1 to 1-1-4.

Switching regulator (Parts number)	Fuse used	
	Rated voltage	Sony parts number
FAW12-2R1 (1-413-918-11)	250V 2.5A	1-532-826-11
FAW18-2R8 (1-413-918-11)	250V 3A	Pending
FAW05-20R (1-413-915-11)	250V 5A	Pending
MRW-171-1 (1-413-955-11)	250V 3.15A	1-576-133-11
FAW05-30R (1-413-956-11)	250V 6.3A	Pending

1-2. NOTES ON REPAIRING PARTS

1-2-1. Notes on Repairing Parts

(1) Safety Related Components Warning

Components marked ⚠ on the schematic diagrams, exploded views and electrical spare parts list are critical to safety. Replace only with the components specified.

(2) Standardization of Parts

Replacement parts supplied from the Sony Parts Center will sometimes have a different shape or external appearance from the parts originally used in the unit.

This is due to improvements, engineering changes, or standardization of parts.

This manual's exploded views and electrical parts lists indicate the part numbers of current standard parts.

(3) Stock of Parts

The parts marked with an "o" in the SP column are not normally required for routine service work. Orders for parts marked with "o" will be processed, but allow additional time for delivery.

(4) Units for Capacitors and Resistors

The following units are assumed in schematic diagrams, electrical parts lists and exploded views unless otherwise specified.

Capacitors : μF
Resistors : Ω

1-2-2. Replacing Chip Parts

Tools required

Soldering iron : 20 W
If possible, use a soldering-iron tip heat-controller set to 270 ±10℃.
Braided wire (Desodering metal braid) :
SOLDER TAUL or equivalent
Sony part No. 7-641-300-81
Solder : 0.6 mm dia. is recommended
Sharp-pointed tweezers

Soldering conditions

Soldering iron temperature : 270±10℃
Soldering time : two seconds per pin

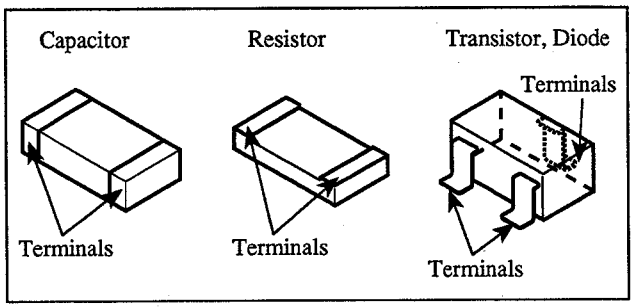

Replacing resistors and capacitors

(1) Place the soldering-iron tip onto the chip part and heat it up until the solder melts.
When the solder melts, slide the chip part aside.
(2) Make sure that there is no pattern peeling, damage and/or bridging around the desoldering position.
(3) After removing the chip part, presolder the area in which the new chip is to be placed with a thin layer of solder.
(4) Place new chip part in position and solder both ends.

Note: Do not reuse a chip part once it has been removed.

Replacing transistors and diodes

(1) Cut the terminals of the chip part with nippers.
(2) Remove the cut leads as above.
(3) Make sure that there is no pattern peeling, damage and/or bridging around the desoldering positions.
(4) After removing the chip part, presolder the area in which the new chip part is to be placed, with a thin layer of solder.
(5) Place new chip part in position and solder the terminals.

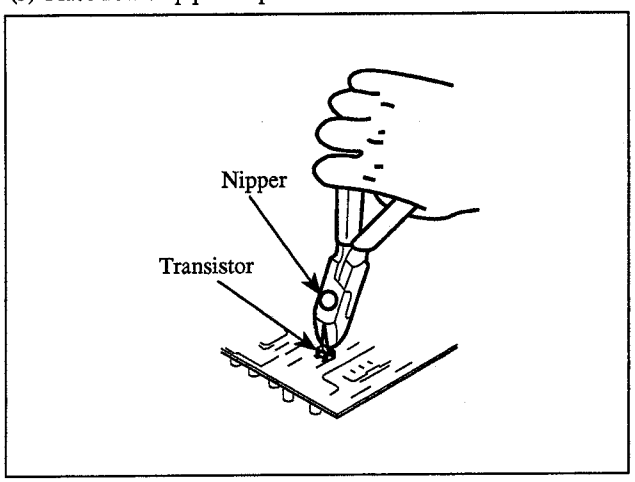

Replacement of ICs

(1) Use the braided wire, remove the solder around the pins of the IC-chip.

(2) While heating up the pins, remove them one by one using sharp-pointed tweezers.

(3) Make sure that there is no pattern peeling, damage and/or bridge around the desoldering position.

(4) After removing the chip part, presolder the area in which the new chip part is placed with a thin layer of solder.

(5) Place new chip part in the desired position and solder the pins.

1-2-3. Removing of PLCC IC

The Extraction Tool is useful for removing the IC (PLCC type) inserted into an IC socket. This is useful for all sizes of ICs 20 pins through 124 pins.

Extraction Tool (for PLCC socket)
Sony part number J-6035-070-A

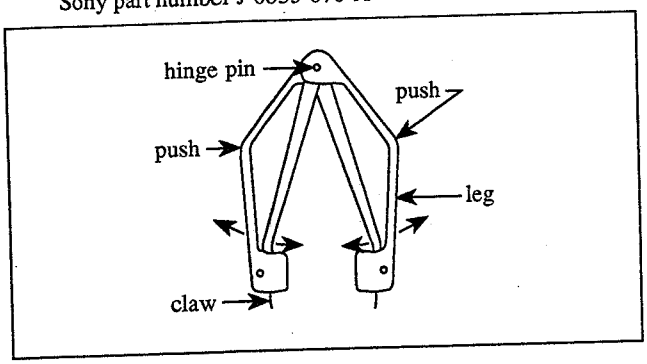

Note: · Never pull chips of IC upward with the extraction tool.
· Never hold the extraction tool on a strong force.

1. Adjust which so that the claws of the tool are matched to the socket of an IC.

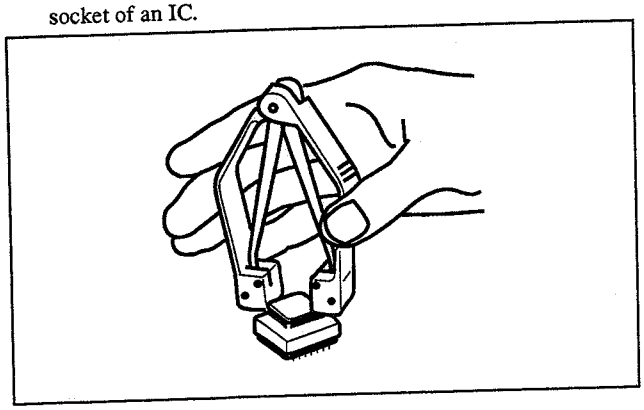

2. Insert the claws of the tool into the slots of the socket, and then press the tool against the socket so that the A portion shown in the figure contact to the socket.

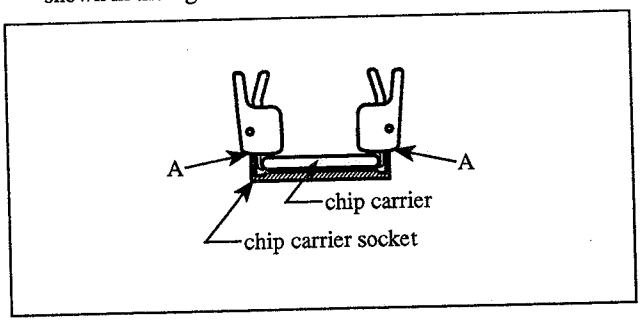

3. Hold the tool as shown in the figure. The socket is pressed on a little force to downward.

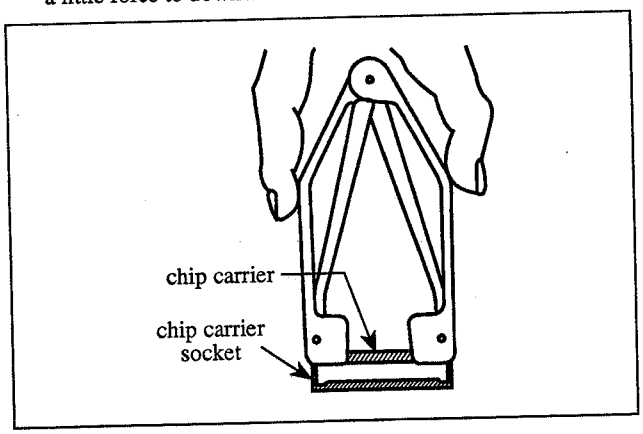

4 Pinch the tool, so the legs of the tool are straightened. At that time, the claws pinch the chips of the IC and pull the IC upward.

5. After pulling the IC, loosen the force of the fingers, and take off the chip.

1-2-4. Replacing TIME KEEPER RAM

DMX-B4008/B4016 and DMBK-4001 use a TIME KEEPER RAM (DS1634-150) which has a lithium battery to store the setup data.

Unit	Used in
DMX-B4008	IC204, CPU-145 board (CONSOLE)
DMX-B4016	IC204, CPU-145A board (CONSOLE)
DMBK-4001	IC202, CPU-146 board (CONTROL PANEL ASSY)

When the lithium battery becomes empty, the customized setup data is no longer stored. Therefore, replace the battery with a new one about every five years.

Part to be prepared

Time keeper RAM DS1643-150: Sony parts number 8-759-097-08

Procedure

DS1634-150 is mounted on the IC socket. Remove the RAM from the IC socket with tweezers and replace it with a new one.

Treatment after replacement

(1) After replacing DS1643-150 (CPU-145/145A board) in the DMX-B4008/B4016, set the bit switches as follows before turning on the power of the console:

Set bit switch S103 on the CPU-145 (A) board as follows:
S103-1 switch: ON
S103-4 switch: ON

After setting the switches, turn on the power of the console.

(2) After the CPU starts up, turn off the bit switches which were turned on in step 1 and turn off the power of the console.

(3) Turn on the power of the console again and set up data to be customized.

SAFETY CHECK-OUT

After correcting the original service problem, perform the following safety checks before releasing the set to the customer :

Check the metal trim, "metallized" knobs, screws, and all other exposed metal parts for AC leakage. Check leakage as described below.

LEAKAGE TEST

The AC leakage from any exposed metal part to earth ground and from all exposed metal parts to any exposed metal part having a return to chassis, must not exceed 3.5 mA. Leakage current can be measured by any one of three methods.

1. A commercial leakage tester, such as the Simpson 229 or RCA WT-540A. Follow the manufacturers' instructions to use these instruments.

2. A battery-operated AC milliammeter. The Data Precision 245 digital multimeter is suitable for this job.

3. Measuring the voltage drop across a resistor by means of a VOM or battery-operated AC voltmeter. The "limit" indication is 5.25 V, so analog meters must have an accurate low-voltage scale. The Simpson 250 and Sanwa SH-63Trd are examples of a passive VOM that is suitable. Nearly all battery operated digital multimeters that have a 20 V AC range are suitable. (See Fig. A)

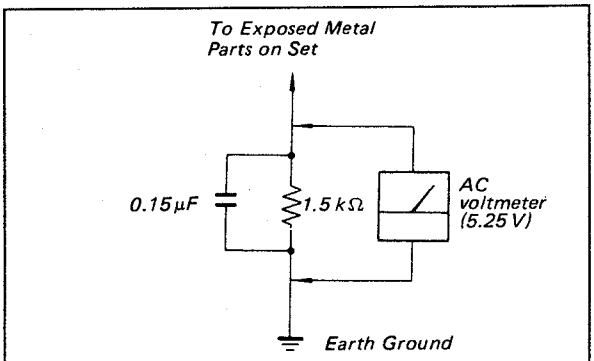

Fig. A. Using an AC voltmeter to check AC leakage.

SECTION 2
ELECTRICAL ADJUSTMENTS

This section describes the electrical alignment required during maintenance and repair of the following circuit boards.

Board	Description	Used for
MOA-7A/7B	2-2-1. Monitor Output Level Adjustment 2-2-2. Surround Monitor Output Level Adjustment 2-2-3. HEADPHONES Output Level Adjustment 2-2-4. Analog Meter Output Level Adjustment 2-2-5. Communication Level Adjustment	DMX-B4008/B4016 Console
CPU-164	2-3. PLL Adjustment	DMX-B4008 Processor
DIO-26	2-4. DA Converter Level Adjustment 1	DMX-B4008 Processor
CN-837	2-5. DA Converter Level Adjustment 2	DMX-B4008 Processor
CPU-144	2-6-1. PLL Adjustment 2-6-2. DA Converter Level Adjustment	DMX-B4016 Processor
AD-100 (DMBK-4012 installed)	2-7-1. MIC Amplifier Adjustment 2-7-2. LINE Amplifier Adjustment 2-7-3. INSERTION SEND/RETURN Amplifier Adjustment 2-7-4. DA Converter Level Adjustment	DMX-B4008/B4016 Console

2-1. PREPARATION

2-1-1. Tools and Equipment Required

Equipment Required

Name	Specifications	Equipment
Frequency counter	6 effective digits or more	HEWLETT PACKARD HP5313 or equivalent
Audio analyzer	• Oscillator Frequency range : 10 Hz to 100 kHz Output level : -70 to +30 dBs, balanced type • Level meter Measurement range : -70 to +30 dBs, balanced type	SOUND TECHNOLOGY ST-1710A or equivalent

Tools

Name	Sony Parts Number	Remarks
Extension board EX-360	J-6400-050-A	For DMX-B4008 Processor
Extension board EX-455	J-6401-190-A	For DMX-B4016 Processor
Dsub-XLR conversion cable	J-6401-180-A	For D/A converter level adjustment.
SONY ECD-3, ECD-10 or ECD-15	Optional accessory	For connecting digital audio (AES/EBU)
Adjustment driver (2 mm)	7-770-731-03	

2-1-2. Initial Setting

Execute the following initial settings before starting the adjustment unless otherwise specified.

1. Connection

Connect the processor rear panel PGM OUT connector with the ST1 connector using the connection cable ECD-3C (cable for digital audio [AES/EBU]).

DMX-B4008

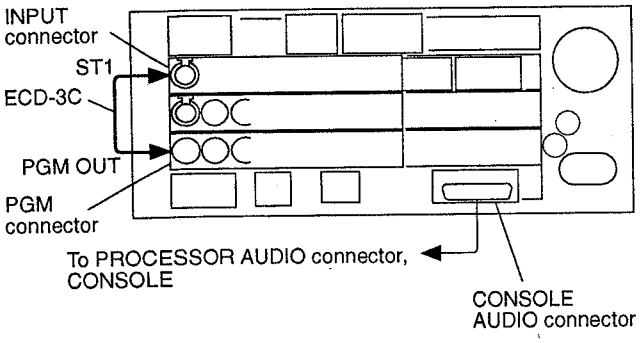

DMX-B4016

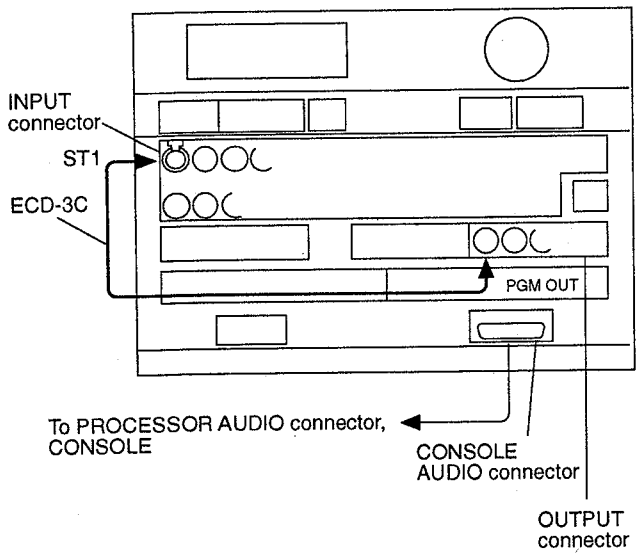

2. Initial settings of switches and controls

DMX-B4008/B4016 Meter Unit

Switch
- AUTO : OFF
- HOLD : OFF

DMX-B4008/B4016 Console

Channel Operation Panel (respective channel blocks)

Switch
- ACCESS : OFF } (only one turns on)
- MUTE : OFF
- PFL : OFF
- START : OFF
- STOP : OFF

Control
- Channel Fader : Display the DIAGNOSTICS screen of the Setup screen. Select the FADER/SWITCH operation check mode. Set the channel fader level to "B1". Refer to the OPERATION MANUAL, Section 3 "OPERATION" for details of the setup procedure.

Setup (touch) Panel

Display the following setup screen and execute the setup as follows:
For items other than those listed below, the setup is not restricted.
Refer to the OPERATION MANUAL, Section 3 "OPERATION" for details of the setup procedure.

SCENE screen
- Set (register) scene 00.

INSERTION screen
- INSERTION ON/OFF : OFF

MONITOR screen
- MODE : ST (both CONTROL ROOM and STUDIO)
- SOURCE : PGM (both CONTROL ROOM and STUDIO)

MT (METER)/OSC/TB screen
- METER SELECT (DMX-B4016 only) : PGM, MIX1, AUX1
- OSC : OFF
- TB/ID : OFF

Master Operation (Monitor) Panel

COMMUNICATION block
- SP LVL control : MAX
- TB LVL control : MAX
- SEND1, SEND2, SEND3 switch : MAX

STUDIO block
- STUDIO monitor control : MAX (turned fully clockwise)
- CUE switch : OFF
- CUT switch : OFF

CONTROL ROOM block
- CONTROL ROOM monitor control : MAX(turned fully clockwise)
- ALT switch : OFF
- CUT switch : OFF

HEADPHONES block
- HEADPHONE control : MAX (turned fully clockwise)
- Master Fader : position 0 (MAX)

Setting the Switches and Jumpers on the Console Circuit Boards

For the switches and jumpers on the following console boards, retain the current system setting.

- CPU-145, MOA-7A/B, IF-414 and KY-225 boards

DMX-B4008 Processor

For the switches and jumpers on the following processor boards , retain the current system setting.

- CPU-164, DIO-26 and MIX-15 boards
  However, set all the de-emphasis processing of the input signal to AUTO mode (set all the switches S2-1 to S2-8 on MIX-15 board to off.)

DMX-B4016 Processor

For the switches and jumpers on the following processor boards, retain the current system setting.

- CPU-144, IPM-48 and MIX-16 boards
  However, set all the de-emphasis processing of the input signal to AUTO mode (set all the switches S703-1 to S703-8, switches S704-1 to S704-8 and switches S705-3 to S705-4 on IPM-48 board to off.)

DMX-B4001 Processor

Control panel
This has no switches or controls that need to be set during adjustment.

CPU-146 board
Retain the current setting for the switches and jumpers.

DMBK-4012 (OPTION)

HA panel (20-bit MIC/LINE input module)

+48V switch	: OFF
LINE switch	: OFF
ϕ switch	: OFF
INS switch	: OFF
MIC ON switch	: ON
GAIN switch	: 30 (dB)
TRIM control	: mechanical center position

AD-100 board
Retain the current setting for the switches and jumpers.

2-2. MOA-7A/7B BOARD ADJUSTMENT (DMX-B4008/B4016 console)

Preparation

Remove the touch panel assembly (console) keeping the harness connected, so that the MOA-7A/7B board can be adjusted from the console. Refer to the MAINTENANCE MANUAL Part 1 Section "3-7. Touch Panel/EL Display (Console) Replacement" for details of how to remove the touch panel assembly.

Equipment Required

Audio analyzer (audio level meter)

Adjustment Location

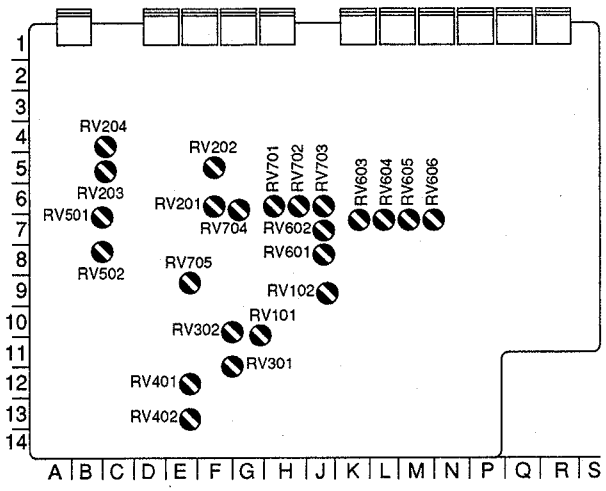

MOA-7A/7B BOARD (A-side)

2-2-1. Monitor Output Level Adjustment

The output level of the following MONITOR outputs from the console is adjusted.

MONITOR output
- CONTROL ROOM MONITOR OUT L
- CONTROL ROOM MONITOR OUT R
- STUDIO MONITOR OUT SP-L
- STUDIO MONITOR OUT SP-R
- STUDIO MONITOR OUT HP-L
- STUDIO MONITOR OUT HP-R

Equipment Required
Audio level meter (audio analyzer)

Switches and Controls Setting
Same as Section "2-1-2. Initial Setting".

Connection

CONSOLE Rear panel

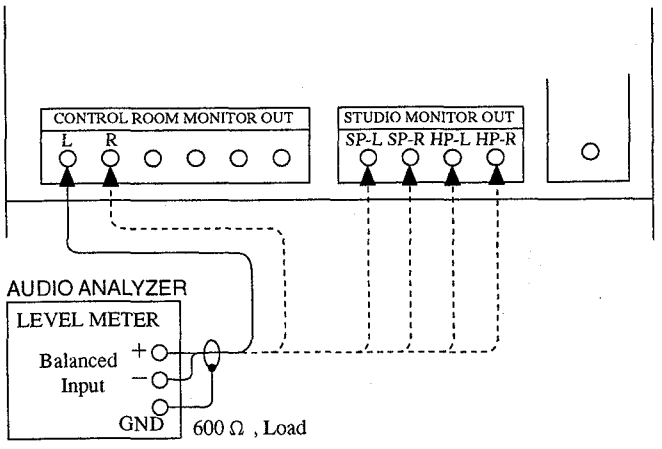

Adjustment Procedure

(1) Display the MT/OSC/TB screen of the Setup screen. Set the OSC (output from the built-in oscillator) to the PGM output.
(The status indicator OSC of the meter unit turns on.)

(2) Adjustment

Adjustment	Adjustment Conditions	Specifications	Adjustment (MOA-7A/7B Board)
CONTROL ROOM MONITOR OUT L Output Level Adjustment	Connect the level meter (audio analyzer) to the CONTROL ROOM MONITOR OUT L connector.	Output level: +4.0 dBs ± 0.1 dB	⊘ RV101 (G,11)
CONTROL ROOM MONITOR OUT R Output Level Adjustment	Connect the level meter (audio analyzer) to the CONTROL ROOM MONITOR OUT R connector.	Output level: +4.0 dBs ± 0.1 dB	⊘ RV102 (J,9)
STUDIO MONITOR OUT SP-L Output Level Adjustment	Connect the level meter (audio analyzer) to the STUDIO MONITOR OUT SP-L connector.	Output level: +4.0 dBs ± 0.1 dB	⊘ RV201 (F,6)
STUDIO MONITOR OUT SP-R Output Level Adjustment	Connect the level meter (audio analyzer) to the STUDIO MONITOR OUT SP-R connector.	Output level: +4.0 dBs ± 0.1 dB	⊘ RV202 (F,5)
STUDIO MONITOR OUT HP-L Output Level Adjustment	Connect the level meter (audio analyzer) to the STUDIO MONITOR OUT HP-L connector.	Output level: +4.0 dBs ± 0.1 dB	⊘ RV203 (B,4)
STUDIO MONITOR OUT HP-R Output Level Adjustment	Connect the level meter (audio analyzer) to the STUDIO MONITOR OUT HP-R connector.	Output level: +4.0 dBs ± 0.1 dB	⊘ RV204 (B,4)

(0 dBs = 0.775 Vrms)

(3) Upon completing the adjustment, set the OSC setting to off.
(The status indicator OSC of the meter unit turns off.)

2-2-2. Surround Monitor Output Level Adjustment

The output level of the following MONITOR outputs from the console is adjusted.

MONITOR output
- CONTROL ROOM MONITOR OUT C
- CONTROL ROOM MONITOR OUT S

Equipment Required
Audio oscillator (audio analyzer)
Audio level meter (audio analyzer)

Switches and Controls Setting
Same as Section "2-1-2. Initial Setting".

Connection

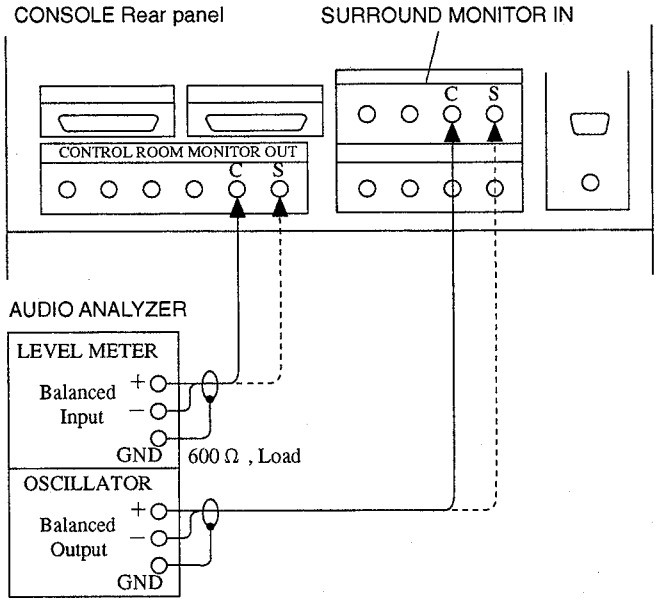

Adjustment Procedure

(1) Display the MONITOR screen of the Setup screen and select the SURR (surround) from the monitor mode.
(2) Adjustment

Adjustment	Adjustment Conditions	Specifications	Adjustment (MOA-7A/7B Board)
CONTROL ROOM MONITOR OUT C Output Level Adjustment	• Connect the oscillator (andio analyzer) (1 kHz, +4 dBs signal output) to the SURROUND MONITOR IN C connector. • Connect the level meter (andio analyzer) to the CONTROL ROOM MONITOR OUT C connector.	Output level: +4.0 dBs ± 0.1 dB	⊘ RV301 (F,12)
CONTROL ROOM MONITOR OUT S Output Level Adjustment	• Connect the oscillator (andio analyzer) (1 kHz, +4 dBs signal output) to the SURROUND MONITOR IN S connector. • Connect the level meter (andio analyzer) to the CONTROL ROOM MONITOR OUT S connector.	Output level: +4.0 dBs ± 0.1 dB	⊘ RV302 (F,10)

(0 dBs = 0.775 Vrms)

(3) Upon completing the adjustment, set the Monitor mode setting to the original setting before the adjustment.

2-2-3. HEADPHONES Output Level Adjustment

Equipment and Parts Required

Audio level meter (audio analyzer)
Phone plug : 1

Switches and Controls Setting

Same as Section "2-1-2. Initial Setting" .

Connection

Master operation panel, console

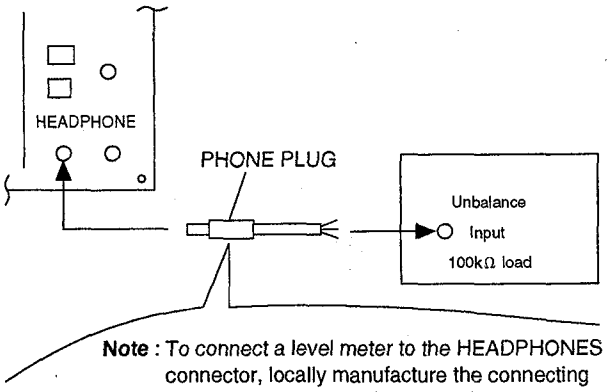

Note : To connect a level meter to the HEADPHONES connector, locally manufacture the connecting cable as shown in the following diagram using a phone plug.

Wiring diagram

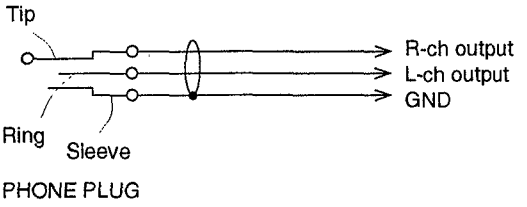

Adjustment Procedure

(1) Display the MT/OSC/TB screen of the Setup screen and set the OSC (built-in oscillator output) to the PGM output. (The status indicator OSC on the meter unit turns on.)

(2) Adjustment

Adjustment	Adjustment Conditions	Specifications	Adjustment (MOA-7A/7B Board)
Step 1 HEADPHONES L-ch, Output Level Adjustment	• Set the HEADPHONES control volume (master operation panel, console) to the MAX position. • Connect the level meter (audio analyzer) to the HEADPHONES connector L-ch output.	HEADPHONES L-ch output level: 0 dBs ± 0.1 dB	⊘ RV401 (E,12)
Step 2 HEADPHONES R-ch, Output Level Adjustment	• Set the HEADPHONES control volume (master operation panel, console) to MAX position. • Connect an audio level meter (audio analyzer) to the HEADPHONES connector R-ch output.	HEADPHONES R-ch output level: 0 dBs ± 0.1 dB	⊘ RV402 (E,13)

(0 dBs = 0.775 Vrms)

(3) Upon completing the adjustment, set the OSC setting to off.(The status indicator OSC of the meter unit turns off.)

2-2-4. Analog Meter Output Level Adjustment

This section describes the analog meter output level adjustment when shipped from factory.
When the VU METER PANEL DMBK-4003 (option) or other meter is connected to the console ANALOG METER connector, and if calibration of the connected meter to the reference position (0 VU etc.) is required, adjust as follows.

Equipment and Parts Required

Audio level meter (audio analyzer)
D-sub, 9-pin, male connector: 1

Connection

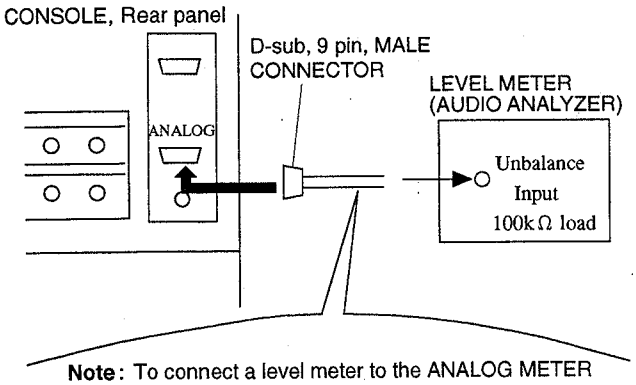

Note: To connect a level meter to the ANALOG METER connector (D-sub, 9-pin, female), locally manufacture the connecting cable as shown in the following diagram using a D-sub, 9-pin, male connector.

Wiring diagram

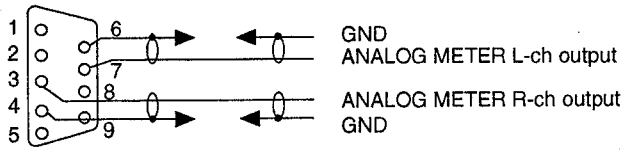

D-sub, 9-pin, male connector
—WIRING SIDE—

Switches and Controls Setting

Same as Section "2-1-2. Initial Setting".

Adjustment Procedure

(1) Display the MT/OSC/TB screen of the Setup screen and set the OSC (built-in oscillator output) to the PGM output. (The status indicator OSC on the meter unit turns on.)
(2) Adjustment
Specifications : ANALOG METER L-ch (pin-7) output level = +4.0 dBs ± 0.1 dB (factory setting)
ANALOG METER R-ch (pin-3) output level = +4.0 dBs ± 0.1 dB (factory setting)
Or
The indication level of the meter connected = reference point (0 VU, etc.)
Adjustment : L-ch = ⊘RV501/MOA-7 board (B, 7)
R-ch = ⊘RV502/MOA-7 board (B, 8)
(3) Upon completing the adjustment, set the OSC setting to off.
(The status indicator OSC of the meter unit turns off.)

2-2-5. Communication Level Adjustment

This section describes the communication input and output level adjustment of the COMMUNICATION connector.
When communication is established with external equipment using the COMMUNICATION connector, and when audio level does not match the external equipment, adjust the volume controls as described below.

Input and Output Level of the Communication to be Changed	Adjustment (MOA-7A/7B Board)
Talkback 1 output level	⊘ RV603 (L, 7)
Talkback 2 output level	⊘ RV604 (L, 7)
Talkback 3 output level	⊘ RV605 (M, 7)
Talkback 1 interrupt level to studio monitor	⊘ RV606 (M, 7)
Input level balance of built-in talkback mic and external talkback mic	Built-in talkback mic : ⊘RV601 (J, 8) External talkback mic : ⊘RV602 (J, 7)
Speaker level of the intercom receive 1 input	⊘ RV701 (H, 6)
Speaker level of the intercom receive 2 input	⊘ RV702 (H, 6)
Reverse talkback level from DMBK-4012 (option)	⊘ RV703 (J, 6)
Intercom receive 1 and other interrupt level to headphone	⊘ RV704 (G, 6)
Narration monitor level from DMBK-4012 (option)	⊘ RV705 (E, 8)

The adjustment (setting) procedures when shipped from factory are described as follows.

Equipment and Parts Required

Audio level meter (audio analyzer)
Audio oscillator (audio analyzer)

D-sub, 37-pin, male connector : 1
D-sub, 15-pin, male connector : 1

Switches and Controls Setting

Same as Section "2-1-2. Initial Setting".

Connection
For adjustment steps 1 through 9

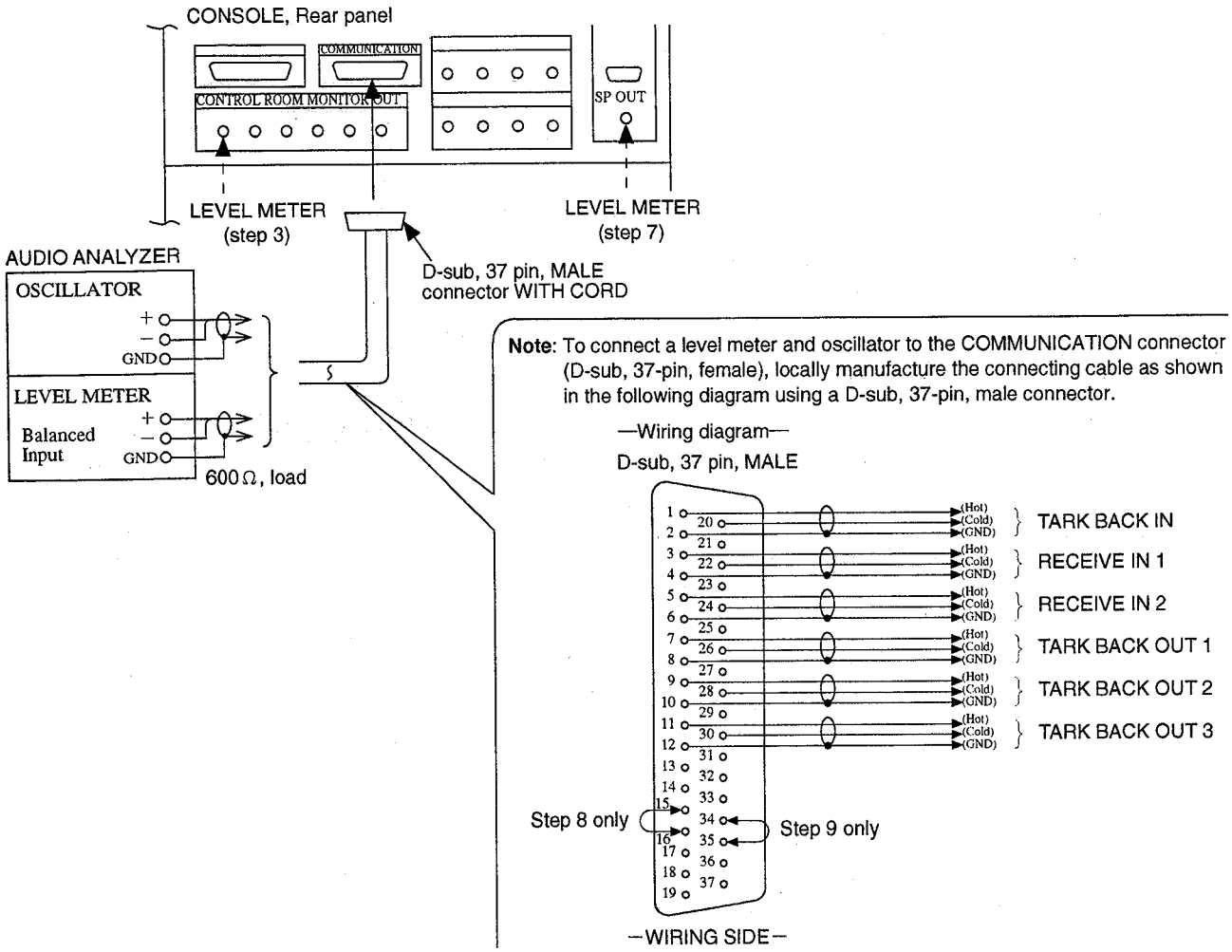

For adjustment steps 10 and 11

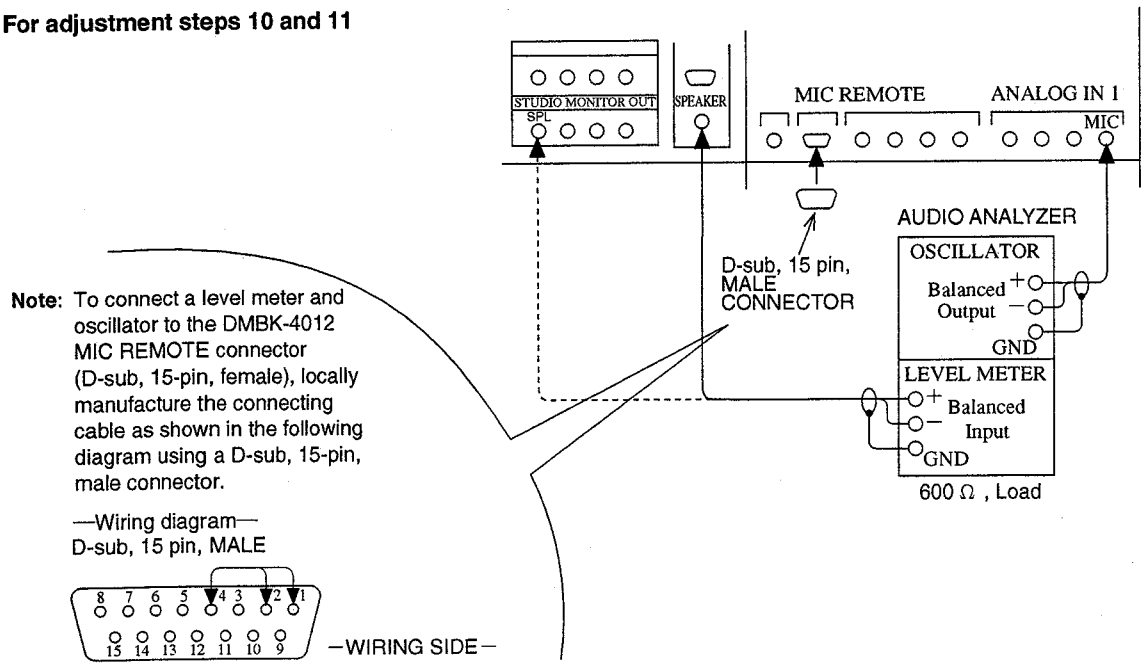

Adjustment Procedure

Note : 1. Execute the adjustment in the order of step number.
2. Adjustment steps 10 and 11 require DMBK-4012 (option) installed.

Adjustment	Adjustment Conditions	Specifications	Adjustment (MOA-7A/7B Board)
Step 1, Talkback out-1 output level adjustment	• Turn RV601 (J, 8) fully clockwise. • Turn RV602 (J, 7) fully clockwise. • Turn on the SEND-1 switch (master operation panel, console). • Connect the oscillator (audio analyzer) (1 kHz, +4 dBs balanced-type signal output) to the TALK BACK IN (pin-1: hot/pin-20: cold/pin-2: GND) of the COMMUNICATION connector. • Connect an audio level meter (analyzer) to the TALK BACK OUT 1 (pin-7: hot/pin-26: cold/pin-8: GND) of the COMMUNICATION connector.	TALK BACK OUT 1 output level: +24.0 dBs ± 0.1 dB	⊘ RV603 (L, 7)
Step 2, External talkback microphone mix level adjustment	• Same as step 1.	TALK BACK OUT 1 output level : +14.0 dBs ± 0.1 dB	⊘ RV602 (J, 7)
Step 3, Studio talkback output level adjustment	• Turn RV601 (J, 8) fully clockwise. • Turn on the SEND-1 switch (master operation panel, console). • Connect the oscillator (audio analyzer) (1 kHz, +4 dBs balanced-type signal output) to the TALK BACK IN (pin-1: hot/pin-20: cold/pin-2: GND) of the COMMUNICATION connector. • Connect the level meter (audio analyzer) to the STUDIO MONITOR OUT SP-L connector.	STUDIO MONITOR OUT SP-L output level: +14.0 dBs ± 0.2 dB	⊘ RV606 (M, 7)
Step 4, Talkback out-2 output level adjustment	• Turn RV601 (J, 8) fully clockwise. • Turn on the SEND-2 switch (master operation panel, console). • Connect the oscillator (audio analyzer) (1 kHz, +4 dBs balanced-type signal output) to the TALK BACK IN (pin-1: hot/pin-20: cold/pin-2: GND) of the COMMUNICATION connector. • Connect the level meter (audio analyzer) to the TALK BACK OUT 2 (pin-9: hot/pin-28: cold/pin-10: GND) of the COMMUNICAITION connector.	TALK BACK OUT 2 output level: +14.0 dBs ± 0.2 dB	⊘ RV604 (L, 7)
Step 5, Talkback out-3 output level adjustment	The settings remain the same as step 4 except the followings: • Turn on the SEND-3 switch (master operation panel, console). • Connect the level meter (audio analyzer) to the TALK BACK OUT 3 (pin-11: hot/pin-30: cold/pin-12: GND) of the COMMUNICAITION connector.	TALK BACK OUT 3 output level: +14.0 dBs ± 0.2 dB	⊘ RV605 (M, 7)
Step 6, Built-in talkback microphone mix level adjustment	The settings remain the same as step 5 except the followings: • Remove any connection from the TALK BACK IN of COMMUNICATION connector.	• Set RV601 to the same position as RV602 of step 2 mechanically. • Check that output is present at the TALK BACK OUT 3.	⊘ RV601 (J, 8)

(0 dBs = 0.775 Vrms)

Adjustment	Adjustment Conditions	Specifications	Adjustment (MOA-7A/7B Board)
Step 7, Intercom receive-1 mix level adjustment	• Set the SP LVL control (master operation panel, console) to the MAX. • Connect the oscillator (audio analyzer) (1 kHz, +4 dBs balanced-type signaloutput) to the RECEIVE IN 1 (pin-3: hot/pin-22: cold/ pin-4: GND) of the COMMUNICATION connector. • Set the RECEIVE CMD IN 1 (pin-15) of the COMMUNICATION connector to "L". (Connect pin-15 and pin-16, GND) • Connect the level meter (audio analyzer) to the SPEAKER OUT connector (console, rear panel).	SPEAKER OUT output level: +12.0 dBs ± 0.2 dB	⊘ RV701 (H, 6)
Step 8, Intercom mix level adjustment	• Set the HEADPHONES control (master operation panel, console) to the MAX. • Connect the oscillator (audio analyzer) (1 kHz, +4 dBs balanced-type signal output) to the RECEIVE IN 1 (pin-3: hot/pin-22: cold/ pin-4: GND) of the COMMUNICATION connector. • Set the RECEIVE CMD IN 1 (pin-15) of the COMMUNICATION connector to "L". (Connect pin-15 and pin-16, GND) • Connect the level meter (audio analyzer) to the HEADPHONES (master operation panel, console) connector L-ch outpot. Refer to Section "2-2-4. HEADPHONES output level adjustment" for connection.	HEADPHONES connector L-ch output level: 0 dBs ± 0.2 dB	⊘ RV704 (G, 6)
Step 9, Intercom receive-2 mix level adjustment	• Set the SP LVL control (master operation panel, console) to the MAX. • Connect the oscillator (audio analyzer) (1 kHz, +4 dBs balanced-type signal output) to the RECEIVE IN 2 (pin-5: hot/pin-24: cold/ pin-6: GND) of the COMMUNICATION connector. • Set the RECEIVE CMD IN 2 (pin-34) of the COMMUNICATION connector to "L". (Connect pin-34 and pin-35, GND) • Connect the level meter (audio analyzer) to the SPEAKER OUT connector (console, rear panel).	SPEAKER OUT output level: +12.0 dBs ± 0.2 dB	⊘ RV702 (H, 6)
Step 10, Reverse talkback mix level adjustment	• Connect the oscillator (audio analyzer) (1 kHz, -30 dBs balanced-type signal output) to the MIC connector of DMBK-4012, ANALOG IN 1 panel (console, rear panel). • Set the REVERSE TALK BACK CMD IN 1 (pin-2) and MIC ON CMD IN 1 (pin-1) of the MIC REMOTE connector of DMBK-4012, ANALOG IN 1 panel (console, rear panel) to "L". (Connect pin-1 and pin-2 to pin-4, GND.) • Connect the level meter (audio analyzer) to the SPEAKER OUT connector (console, rear panel).	SPEAKER OUT output level: +12.0 dBs ± 0.2 dB	⊘ RV703 (J, 6)
Step 11, Narration monitor mix level adjustment	• Display the NARRATION SOURCE/PFL LOGIC screen of the setup screen, and select the NARRATION SOURCE. • Connect the oscillator (audio analyzer) (1 kHz, -30 dBs balanced-type signal output) to the MIC connector of DMBK-4012, ANALOG IN 1 panel (console, rear panel). • Connect the level meter (audio analyzer) to the STUDIO MONITOR OUT connector (console, rear panel).	STUDIO MONITOR OUT SPL output level: +4.0 dBs ± 0.1 dB	⊘ RV705 (E, 8)

(0 dBs = 0.775 Vrms)

2-3. PLL Adjustment (CPU-164 Board, DMX-B4008 Processor)

This section describes the PLL adjustment which is the basis of the sampling frequency for entire system.

Equipment Required

Frequency counter
Extension board EX-360:Sony parts number J-6400-050-A

Preparation

(1) Extend CPU-164 board using the extension board EX-360.
(2) Remove all connections from the REF VIDEO IN connector of the processor.

Connection

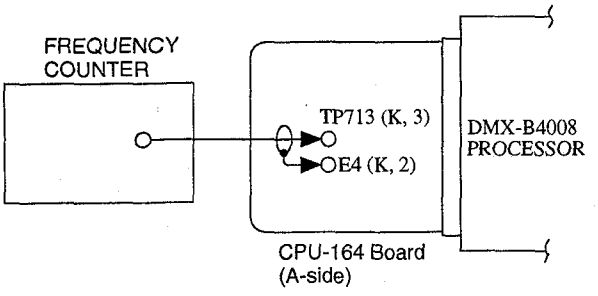

Adjustment Procedure

(1) Connect a frequency counter to TP713/CPU-164 board (K, 3) and E4/CPU-164 board (K, 2).

(2) Set the system clock setting switches S501-1/-2/-3 of CPU-164 board as shown below. Adjust RV701, RV702 and RV703 until the frequency at TP713 meets the following specifications.

Switches and Controls Setting

Same as Section "2-1-2. Initial Setting".

Adjustment Location

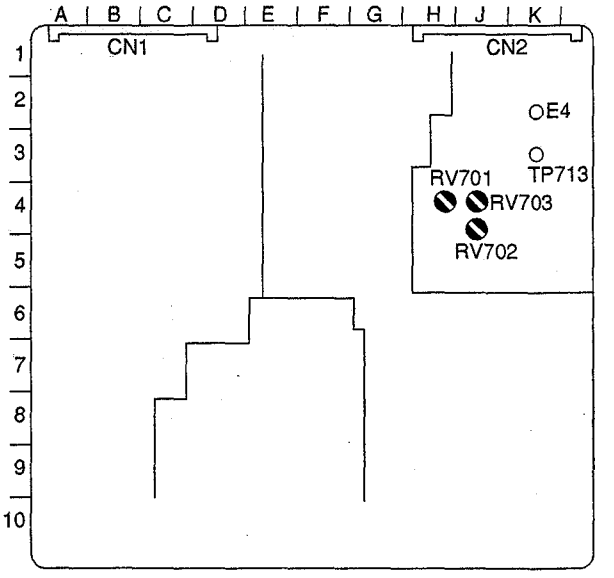

CPU-164 BOARD (A-side)

S501			Sampling frequency	Specifications	Adjustment (CPU-164 board)
-1	-2	-3			
ON	OFF	OFF	48.0 kHz	4.8000 MHz ±40 Hz	RV701(H, 4)
OFF	ON	OFF	44.1 kHz	4.4100 MHz ±40 Hz	RV702(J, 4)
OFF	OFF	ON	44.056 kHz	4.4056 MHz ±40 Hz	RV703(J, 4)

2-4. DA CONVERTER LEVEL ADJUSMENT 1 (DIO-26 Board, DMX-B4008 Processor)

This section describes the DA converter adjustment for CONTROL ROOM MONITOR and STUDIO MONITOR.

Equipment and Tools Required

Audio level meter (audio analyzer)
Extension board EX-360: Sony parts number J-6400-050-A
Dsub-XLR conversion cable: Sony parts number J-6401-180-A

Preparation

(1) Extend DIO-26 board using the extension board EX-360.
(2) Remove all connections from the CONSOLE AUDIO connector of the processor and connect the Dsub-XLR conversion cable instead.

Switches and Controls Setting

Same as Section "2-1-2. Initial Setting".

Adjustment Location

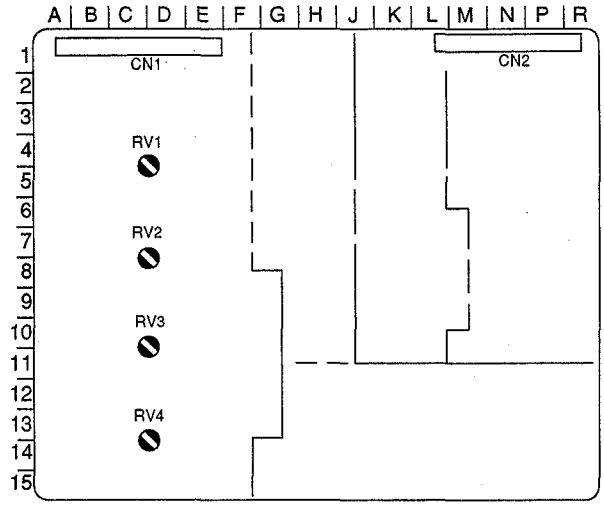

DIO-26 BOARD (A-side)

Connection

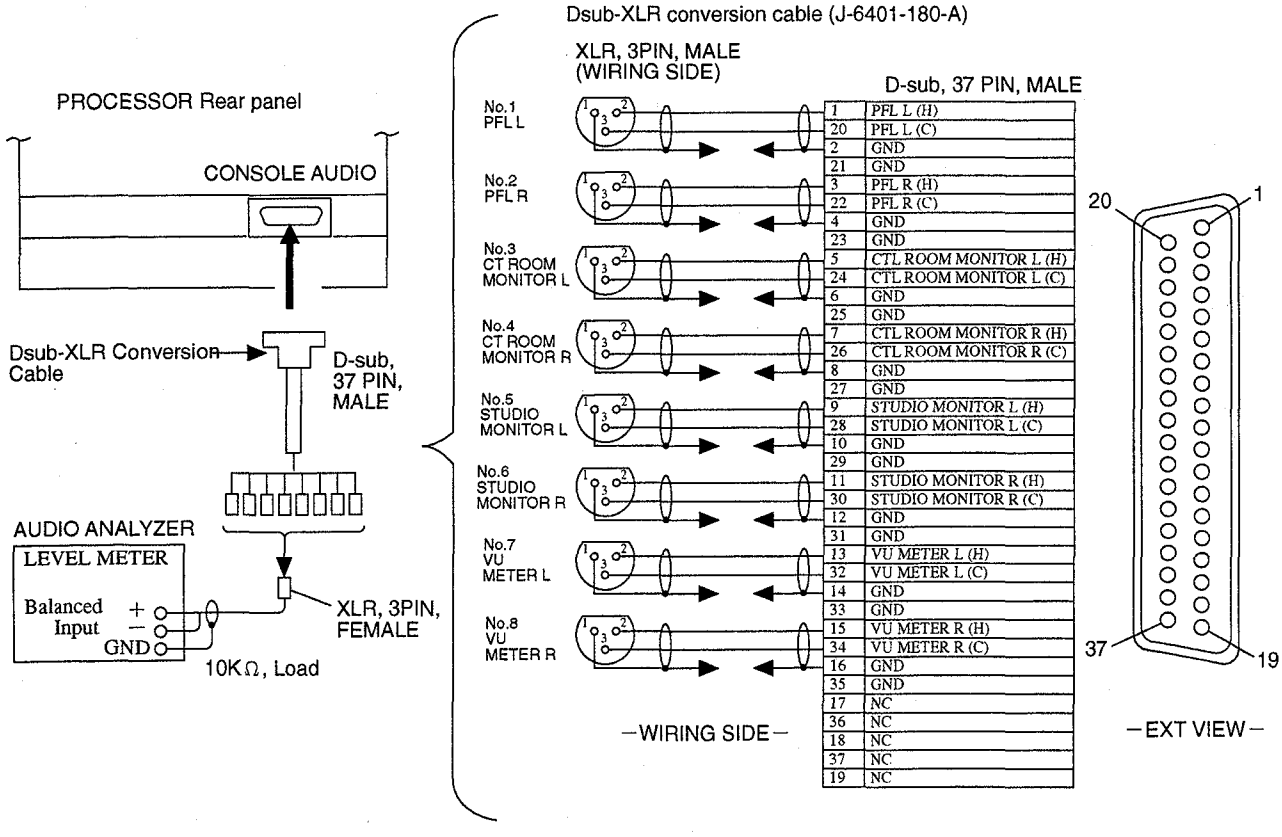

Adjustment Procedure

(1) Display the MT/OSC/TB screen of the Setup screen and set the OSC (built-in oscillator output) to the PGM output. (The status indicator OSC on the meter unit turns on.)
(2) Adjustment

Adjustment	Adjustment Conditions	Specifications	Adjustment (DIO-26 Board)
CONTROL ROOM MONITOR OUT L Converter Level Adjustment	Connect the level meter (audio analyzer) to No.3 cable (CTL RM MONITOR L) of the Dsub-XLR conversion cable.	DA converter level: +4 dBs ± 0.1 dB	⊘ RV1 (D, 9)
CONTROL ROOM MONITOR OUT R Converter Level Adjustment	Connect the level meter (audio analyzer) to No.4 cable (CTL RM MONITOR R) of the Dsub-XLR conversion cable.	DA converter level: +4 dBs ± 0.1 dB	⊘ RV2 (D, 7)
STUDIO MONITOR L Converter Level Adjustment	Connect the level meter (audio analyzer) to No.5 cable (STUDIO MONITOR L) of the Dsub-XLR conversion cable.	DA converter level: +4.0 dBs ± 0.1 dB	⊘ RV3 (D, 10)
STUDIO MONITOR R Converter Level Adjustment	Connect the level meter (audio analyzer) to No.6 cable (STUDIO MONITOR R) of the Dsub-XLR conversion cable.	DA converter level: +4.0 dBs ± 0.1 dB	⊘ RV4 (D, 13)

(0 dBs = 0.775 Vrms)

(3) Upon completing the adjustment, set the OSC setting to off.
(The status indicator OSC of the meter unit turns off.)

2-5. DA CONVERTER LEVEL ADJUSTMENT 2 (CN-837 Board, DMX-B4008 Processor)

This section describes the DA converter adjustment for PFL.

Equipment and Parts Required

Audio level meter (audio analyzer)
Dsub-XLR conversion cable : Sony parts number J-6401-180-A

Preparation

Remove all connections from the CONSOLE AUDIO connector of the processor and connect the Dsub-XLR conversion cable instead.

Connection

Same as section "2-2-5. Communication Level Adjustment".

Switches and Controls Setting

Same as Section "2-1-2. Initial Setting".

Adjustment Procedure

(1) Display the MT/OSC/TB screen of the Setup screen and set the OSC (built-in oscillator output) to the PGM output. (The status indicator OSC on the meter unit turns on.)
(2) Turn on the PFL switch of the CH-1 channel operation block of the channel operation panel. (The status indicator PFL of the meter unit turns on.)
(3) Adjustment

Adjustment Location

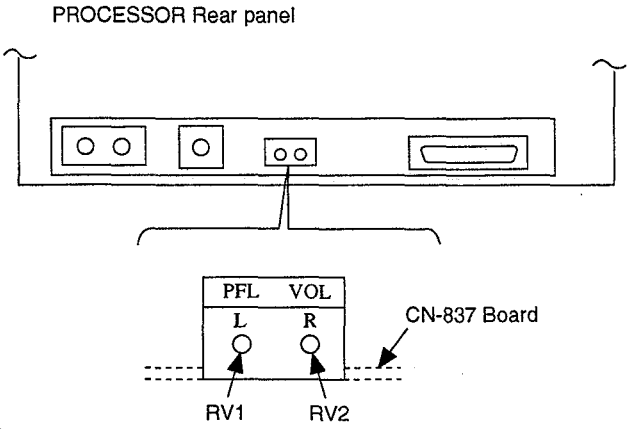

Adjustment	Adjustment Conditions	Specifications	Adjustment (CN-837 Board)
PFL L Converter Level Adjustment	Connect the level meter (audio analyzer)to No.1 cable (PFL L) of the Dsub-XLR conversion cable.	DA converter level: +4.0 dBs ± 0.1 dB	⊘ RV1 Execute adjustment through the adjustment opening on the rear panel.
PFL R Converter Level Adjustment	Connect the level meter (audio analyzer) to No.2 cable (PFL R) of the Dsub-XLR conversion cable.	DA converter level: +4.0 dBs ± 0.1 dB	⊘ RV2 Execute adjustment through the adjustment opening on the rear panel.

(0 dBs = 0.775 Vrms)

(4) Upon completing the adjustment, set the OSC setting to off.
(The status indicator OSC of the meter unit turns off.)

2-6. CPU-144 Board Adjustment (DMX-B4016 Processor)

Equipment and Parts Required

Frequency counter
Audio level meter (audio analyzer)
Extension board EX-455: Sony parts number J-6401-190-A
Dsub-XLR conversion cable: Sony parts number J-6401-180-A

Preparation

Extend CPU-144 board using the extension board EX-455.

Adjustment Points

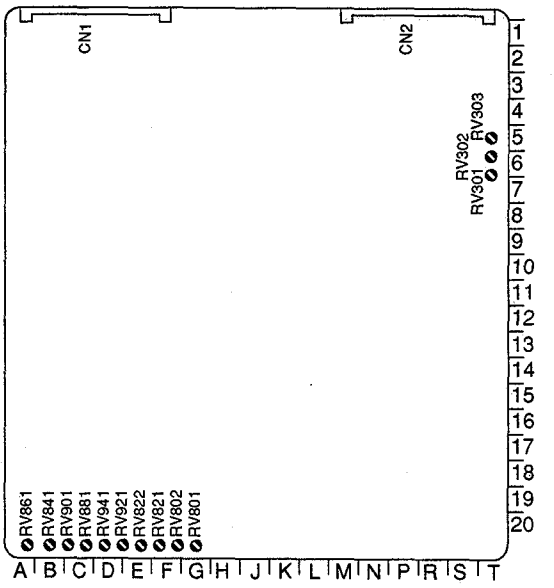

CPU-144 BOARD (A-side)

2-6-1. PLL Adjustment

This section describes PLL adjustment which is the basis for the sampling frequency of entire system.

Connection

Note : Remove the connection from the REF VIDEO INPUT connector of processor.

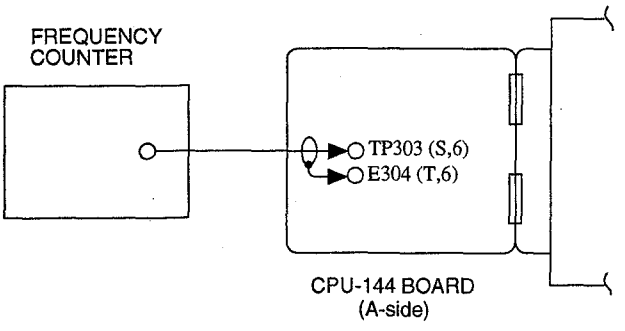

Switches and Controls Setting

Same as Section "2-1-2. Initial Setting".

Adjustment Procedure

(1) Connect the frequency counter to TP303/CPU-144 board (S, 6) and E304/CPU-144 board (T, 6).
(2) Set the system clock setting switches S501-1/-2/-3 of CPU-144 board as shown below. Adjust RV301, RV302 and RV303 until the frequency at TP303 meets the following specifications.

S501			Sampling frequency	Specifications	Adjustment (CPU-144 board)
-1	-2	-3			
ON	OFF	OFF	48.0 kHz	4.8000 MHz ±40 Hz	⊘ RV303(T4)
OFF	ON	OFF	44.1 kHz	4.4100 MHz ±40 Hz	⊘ RV302(T5)
OFF	OFF	ON	44.056 kHz	4.4056 MHz ±40 Hz	⊘ RV301(T4)

2-6-2. DA Converter Level Adjustment 1

This section describes the DA converter adjustment for the ANALOG PGM OUT.

Connection

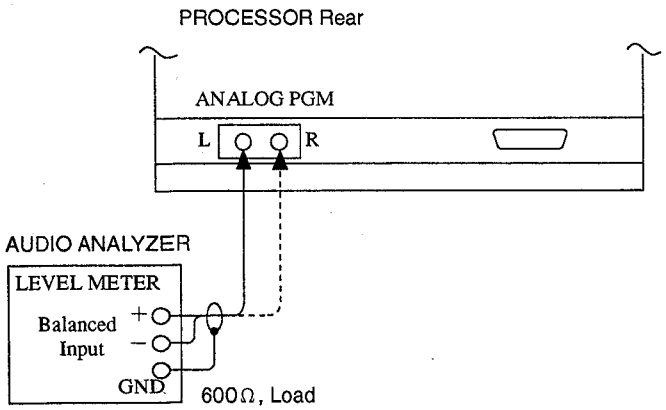

Switches and Controls Setting

Same as Section "2-1-2. Initial Setting".

Adjustment Procedure

(1) Display the MT/OSC/TB screen of the Setup screen and set the OSC (built-in oscillator output) to the PGM output. (The status indicator OSC on the meter unit turns on.)

(2) Adjustment

Adjustment	Adjustment Conditions	Specifications	Adjustment (CPU-144 Board)
ANALOG PGM L DA Converter Level Adjustment	Connect the level meter (audio analyzer) to the ANALOG PGM L connector.	DA converter level: +4.0 dBs ± 0.1 dB	⊘ RV801 (F, 20)
ANALOG PGM R DA Converter Level Adjustment	Connect the level meter (audio analyzer) to the ANALOG PGM R connector.	DA converter level: +4.0 dBs ± 0.1 dB	⊘ RV821 (E, 20)

(0 dBs = 0.775 Vrms)

(3) Upon completing the adjustment, set the OSC setting to off.
(The status indicator OSC of the meter unit turns off.)

2-6-3. DA Converter Level Adjustment 2

This section describes the DA converter adjustment of the analog signal (CONTROL, STUDIO MONITOR, etc..) to be sent to console.

Preparation
Remove the cable from the CONSOLE AUDIO connector of processor, and connect the Dsub-XLR conversion cable instead.

Adjustment Procedure
(1) Display the MT/OSC/TB screen of the Setup screen and set the OSC (built-in oscillator output) to the PGM output.
(The status indicator OSC on the meter unit turns on.)
(2) Turn on the PFL switch of the CH-1 channel operation block of the channel operation panel.
(The status indicator PFL of the meter unit turns on.)
(3) Adjustment

Connection
Same as Section "2-2-5. Communication Level Adjustment".

Switches and Controls Setting
Same as Section "2-1-2. Initial Setting".

Adjustment	Adjustment Conditions	Specifications	Adjustment (CPU-144 Board)
VU METER L DA Converter Level Adjustment	Connect the level meter (audio analyzer) to No.7 cable (VU METER L) of the Dsub-XLR conversion cable.	DA converter level: +4.0 dBs ± 0.1 dB	⊘ RV802 (F, 20)
VU METER R DA Converter Level Adjustment	Connect the level meter (audio analyzer) to No.8 cable (VU METER R) of the Dsub-XLR conversion cable.	DA converter level: +4.0 dBs ± 0.1 dB	⊘ RV821 (E, 20)
CONTROL ROOM MONITOR L DA Converter Level Adjustment	Connect the level meter (audio analyzer) to No.3 cable (CTL RM MONITOR L) of the Dsub-XLR conversion cable.	DA converter level: +4.0 dBs ± 0.1 dB	⊘ RV881 (C, 20)
CONTROL ROOM MONITOR R DA Converter Level Adjustment	Connect the level meter (audio analyzer) to No.4 cable (CTL RM MONITOR R) of the Dsub-XLR conversion cable.	DA converter level: +4.0 dBs ± 0.1 dB	⊘ RV901 (C, 20)
STUDIO MONITOR L DA Converter Level Adjustment	Connect the level meter (audio analyzer) to No.5 cable (STUDIO MONITOR L) of the Dsub-XLR conversion cable.	DA converter level: +4.0 dBs ± 0.1 dB	⊘ RV921 (D, 20)
STUDIO MONITOR R DA Converter Level Adjustment	Connect the level meter (audio analyzer) to No.6 cable (STUDIO MONITOR R) of the Dsub-XLR conversion cable.	DA converter level: +4.0 dBs ± 0.1 dB	⊘ RV941 (D, 20)
PFL L DA Converter Level Adjustment	Connect the level meter (audio analyzer) to No.1 cable (PRL L) of the Dsub-XLR conversion cable.	DA converter level: +4.0 dBs ± 0.1 dB	⊘ RV841 (B, 20)
PFL R DA Converter Level Adjustment	Connect the level meter (audio analyzer) to No.2 cable (PRL R) of the Dsub-XLR conversion cable.	DA converter level: +4.0 dBs ± 0.1 dB	⊘ RV861 (B, 20)

(0 dBs = 0.775 Vrms)

(4) Upon completing the adjustment, set the OSC setting to off.
(The status indicator OSC of the meter unit turns off.)

2-7. AD-100 BOARD ADJUSTMENT (when DMBK-4012 is installed)

This section describes adjustment of the DMBK-4012 MIC amplifier, LINE amplifier, INSERT SEND/RETURN amplifier and D/A converter.

Preparation

Execute the following preparation prior to starting adjustment, with the power to the console turned off.

(1) Remove the AD-100 board of the DMBK-4012 to be adjusted from the console.
(Refer to the MAINTENANCE MANUAL Part 1 Section "2-12. DMBK-4012 20-BIT MIC/LINE Input Module Installation" for details of how to remove the board.)
(2) Remove the shield plate from the unplugged AD-100 board (A side).
(3) Install the AD-100 board (with the shield plate removed) to the console, keeping the harness connected.
(4) Remove the channel panel assembly of the channel frame (console) housing the AD-100 board to be adjusted, keeping the harness connected to allow access to the AD-100 for adjustment.

Equipment Required

Audio oscillator (audio analyzer)
Audio level meter (audio analyzer)
DC voltmeter (or multimeter)

Adjustment Location

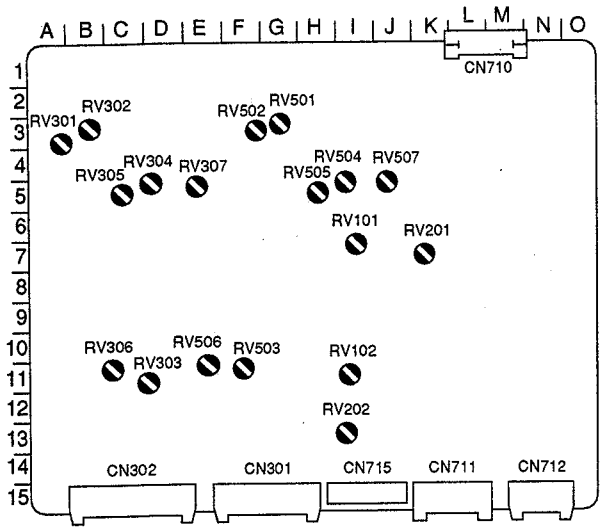

AD-100 BOARD (A-side)

2-7-1. MIC Amplifier Adjustment

Equipment Required

Audio oscillator (audio analyzer)
Audio level meter (audio analyzer)

Connection

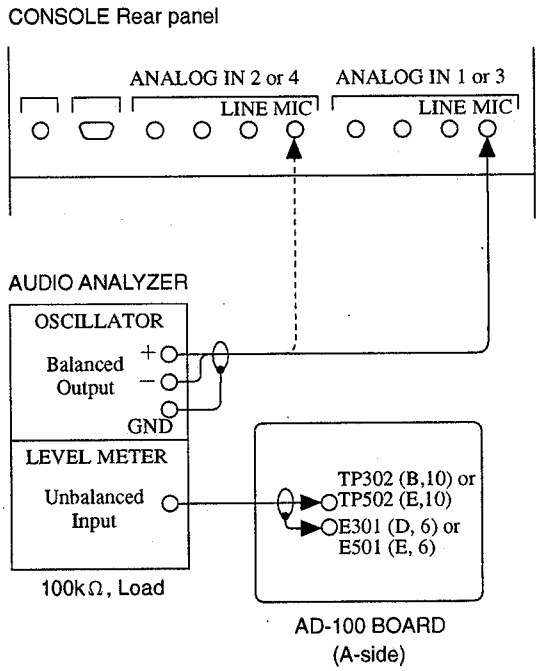

Switches and Controls Setting

Same as Section "2-1-2. Initial Setting".

Adjustment

- Execute the following adjustment in the order of step number.
- Repeat the steps 2 and 3, and 6 and 7 twice repeatedly.

Step	Adjustment	Adjustment Conditions	Specifications	Adjustment (AD-100 Board)
1	MIC1 Input Level Adjustment	• Connect the oscillator (audio analyzer) (1 kHz, -30 dBs signal output) to the MIC IN 1 connector (ANALOG IN1 (or 3)). • Connect the level meter (audio analyzer) to the following point of AD-100 board. TP302 (B, 10) E301 (D, 6) (GND)	TP302 (B, 10) level: -6.0 dBs ± 0.1 dB	⊘ RV303 (D, 11)
2	MIC1 CMRR High Frequency Adjustment **Note** : Repeat steps 2 and 3 twice.	• Same as step 1.	TP302 (B, 10) level: minimum level	⊘ RV302 (B, 4)
3	MIC1 CMRR Low Frequency Adjustment	• Same as step 1. Change the oscillator output to 60 Hz, -30 dBs signal.	TP302 (B, 10) level: minimum level	⊘ RV301 (B, 3)
4	MIC1 Peak Indicator Adjustment Converter Level Adjustment	• Connect the oscillator (audio analyzer) (1 kHz, -21 dBs signal output) to the MIC IN 1 connector.	HA PANEL (DMBK-4012) PK indicator: turns on	⊘ RV306 (C, 4)
5	MIC2 Input Level Adjustment	• Connect the oscillator (audio analyzse) (1 kHz, -30 dBs signal output) to the MIC IN 2 connector (ANALOG IN2 (or 4)). • Connect the level meter (audio analyzer) to the following point of AD-100 board. TP502 (E, 10) E501 (E, 6) (GND)	TP502 (B, 10) level: -6.8 dBs ± 0.1 dB	⊘ RV503 (F, 11)
6	MIC2 CMRR High Frequency Adjustment **Note** : Repeat steps 6 and 7 twice.	• Same as step 5.	TP502 (E, 10) level: minimum level	⊘ RV502 (F, 4)
7	MIC2 CMRR Low Frequency Adjustment	• Same as step 5. Change the oscillator output to 60 Hz, -30 dBs signal.	TP502 (E, 10) level: minimum level	⊘ RV501 (G, 3)
8	MIC2 Peak Indicator Adjustment	• Connect the oscillator (audio analyzer) (1 kHz, -21 dBs signal output) to the MIC IN 2 connector.	HA PANEL (DMBK-4012) PK indicator: turns on	⊘ RV506 (E, 11)

(0 dBs = 0.775 Vrms)

2-7-2. LINE Amplifier Adjustment

Equipment Required

Audio oscillator (audio analyzer)
Audio level meter (audio analyzer)

Switches and Controls Setting

Same as Section "2-1-2. Initial Setting" except the following setting
HA panel (DMBK-4012)
LINE switch: ON

Connection

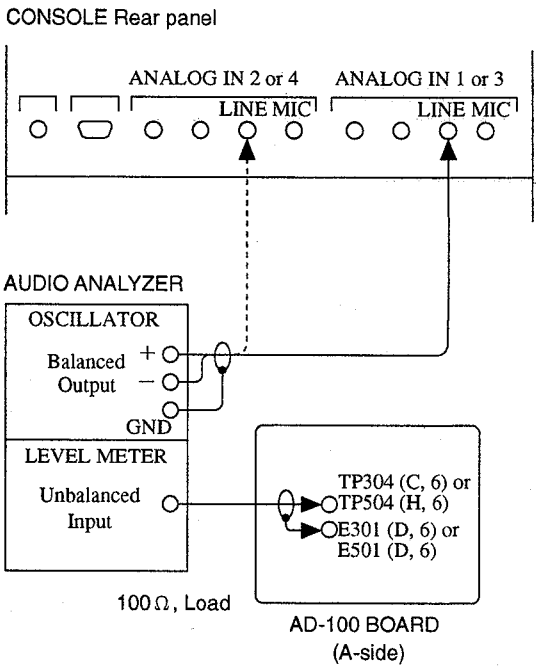

Adjustment

Step	Adjustment	Adjustment Conditions	Specifications	Adjustment (AD-100 Board)
1	LINE1 Input Level Adjustment	• Connect the oscillator (audio analyzer) (1 kHz, -30 dBs signal output) to the LINE IN 1 connector (ANALOG IN1 (or 3) panel). • Connect the level meter (audio analyzer) to the following point of AD-100 board. TP304 (C, 6) E301 (D, 6) (GND)	TP304 (C, 10) level: -6.0 dBs ± 0.1 dB	⊘ RV305 (C, 6)
2	LINE2 Input Level Adjustment	• Connect the oscillator (audio analyzer) (1 kHz, -30 dBs signal output) to the LINE IN 2 connector (ANALOG IN2 (or 4) panel). • Connect the level meter (audio analyzer) to the following point of AD-100 board. TP504 (H, 6) E501 (D, 6) (GND)	TP504 (H, 6) level: -6.0 dBs ± 0.1 dB	⊘ RV505 (H, 6)

(0 dBs = 0.775 Vrms)

2-7-3. INSERTION SEND/RETURN Amplifier Adjustment

Equipment Required

Audio oscillator (audio analyzer)
Audio level meter (audio analyzer)

Switches and Controls Setting

Same as Section "2-1-2. Initial Setting" except the following setting

HA panel (DMBK-4012)
LINE switch : ON (both 1 and 2)
INS switch : ON (both 1 and 2)

Connection

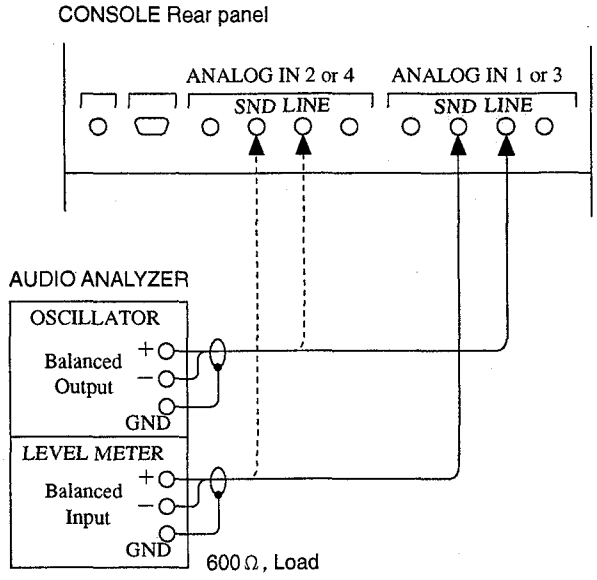

Adjustment

Execute the following adjustment in the order of step number.

Step	Adjustment	Adjustment Conditions	Specifications	Adjustment (AD-100 Board)
1	SEND1 Level Adjustment	• Connect the oscillator (audio analyzer) (1 kHz, +4 dBs signal output) to the LINE IN 1 connector (ANALOG IN1 (or 3) panel). • Connect the level meter (audio analyzer) to the SND1 connector (ANALOG IN1).	SEND1 output level: +4.0 dBs ± 0.1 dB	⊘ RV304 (D, 5)
2	SEND2 Level Adjustment	• Connect the oscillator (audio analyzer) (1 kHz, +4 dBs signal output) to the LINE IN 2 connector (ANALOG IN2 (or 4) panel). • Connect the level meter (audio analyzer) to the SND2 connector (ANALOG IN2).	SEND2 output level: +4.0 dBs ± 0.1 dB	⊘ RV505 (I, 5)
3	RETURN1 Level Adjustment	• Connect the oscillator (audio analyzer) (1 kHz, +4 dBs signal output) to the RTN 1 connector (ANALOG IN 1 (or 3) panel). • Connect the level meter (audio analyzer) to the following point of AD-100 board. TP305 (E, 5) E301 (D, 6) (GND)	TP305 level: -6.0 dBs ± 0.1 dB	⊘ RV307 (E, 5)
4	RETURN2 Level Adjustment	• Connect an audio oscillator output of 1 kHz, +4 dBs to the connector RTN 2 (ANALOG IN 2 (or 4) panel). • Connect an audio level meter to the following point of AD-100 board. TP505 (J, 5) E501 (D, 6) (GND)	TP505 level: -6.0 dBs ± 0.1 dB	⊘ RV507 (J, 5)

(0 dBs = 0.775 Vrms)

2-7-4. DA Converter Adjustment

Equipment Required

Audio level meter (audio analyzer)
Digital multimeter (dc volt meter)
Connecting cable

Switches and Controls Setting

Same as Section "2-1-2. Initial Setting" except the following setting
HA panel (DMBK-4012
INS switch: ON (both 1 and 2)

Connection

Connect the DIGITAL OUT (DMBK-4012 rear panel) output to the digital INPUT 1 of proccesor.

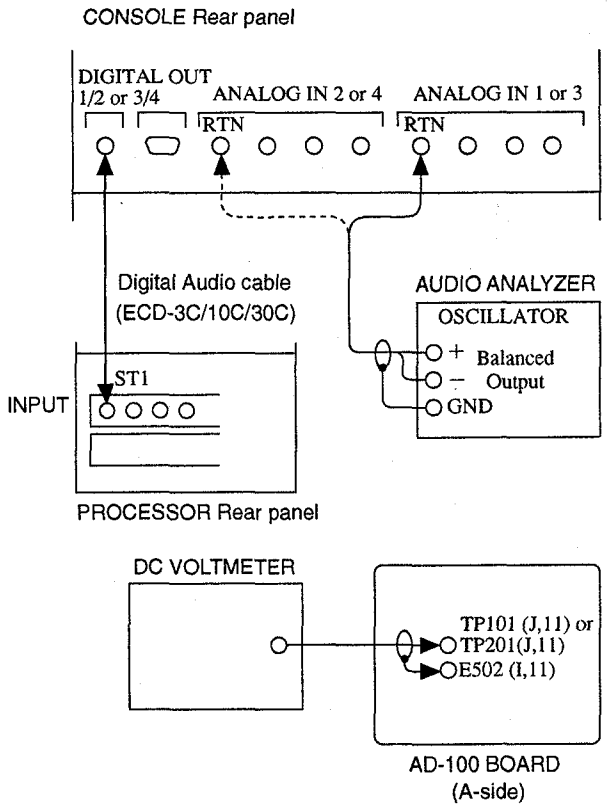

Adjustment

Step	Adjustment	Adjustment Conditions	Specifications	Adjustment (AD-100 Board)
1	L-ch DC Offset Adjustment	• Remove connection from the RTN 1 connector (ANALOG IN1 (or 3) panel). • Connect dc volt meter to the following point of AD-100 board. TP101 (J, 11) E502 (I, 11), GND	Offset voltage: minimum	⊘ RV102 (I, 12)
2	L-ch DA Converter Level Adjustment	• Connect the oscillator (audio analyzer) (1 kHz, +24 dBs signal output) to the RTN 1 connector (ANALOG IN2 (or 4) panel).	Meter unit : The OVER display of the PFL bar graph meter turns off.	⊘ RV101 (I, 7)
3	L-ch DC Offset Adjustment	• Remove connection from the RTN 2 connector (ANALOG IN2 (or 4) panel). • Connect dc volt meter to the following point of AD-100 board. TP201 (J, 11) E502 (I, 11), GND	Offset voltage: minimum	⊘ RV202 (I, 14)
4	L-ch DA Converter Level Adjustment	• Connect the oscillator (audio analyzer) to the RTN 2 connector (ANALOG IN2 (or 4) panel).	Meter unit : The OVER display of the PFL bar graph meter turns off.	⊘ RV201 (K, 8)

(0 dBs = 0.775 Vrms)